AGENDA
Glen Ellyn Plan Commission Special Meeting
Thursday, May 25, 2023 - 7:00 p.m.
Glen Ellyn Civic Center, 535 Duane Street
Galligan Board Room

1. **Call to Order.**

2. **Public Comment (non-agenda items).**

3. **Approval of Draft Minutes.**

   - April 27, 2023, and May 4, 2023, Plan Commission Meeting Minutes

4. **New Business.**

   - Public Hearing (Continued from April 27, 2023) – 1102 Hill Avenue: Special Use Permit to allow the addition of DISH Wireless 5G capable antennas and support equipment to an existing cellular tower

   - Public Hearing – (Continued from April 27, 2023) 415 Taft Avenue: Special Use Permit to allow the addition of DISH Wireless 5G capable antennas and support equipment to an existing cellular tower

   - Discussion and Recommendation - Proposed Zoning Text Amendments: Possible amendments to the Zoning Code relating the keeping of hens.

5. **Trustee's Report.**

6. **Chairman's Report.**

7. **Staff Report.**

8. **Other Business and Adjourn.**

This note provides you with information regarding what happens to a petition after it has appeared before the Plan Commission. After the Commission makes a recommendation on a petition, a report of the meeting is prepared. Then, the petition, along with the summary report and all pertinent material, is scheduled for consideration by the Village Board. The Village Board meets on the second and fourth Mondays of each month at 7:00 p.m. in a meeting room on the third floor of the Civic Center, 535 Duane Street. Questions regarding petitions scheduled for review by the Village Board should be directed to the Community Development Department at (630) 547-5250.

Individuals with disabilities who plan to attend the hearing and who require certain accommodations in order to allow them to observe and participate, or who have questions regarding the accessibility of the meeting or facilities, are requested to contact the Village at least 24 hours before the meeting.

cc: Glen Ellyn Plan Commission
Steve Thompson, Village Board Trustee
Liaison
Mark Franz, Village Manager

Emily Rodman, Assistant Village Manager
Martin Scott, CD Director
Meredith Hannah, Economic Development Coordinator
Grant Paplauskas, Communications Coordinator
Brian Baltudis, Facilities Manager
Nathan Troia, Glen Ellyn Park District
Emily Tammaru, Community Consolidated School District 89
Seth Champan, Glenbard School District 87
Eric DePorter, Glen Ellyn School District 41
Dawn Bussey, Glen Ellyn Public Library
Audrey Savikas, Recording Secretary
Penni Cannova, Executive Secretary
Lori Gloude, Executive Assistant

DRAFT MINUTES
Glen Ellyn Plan Commission
Thursday, May 4, 2023 at 7:00 p.m.
Glen Ellyn Civic Center
Galligan Board Room
535 Duane Street

A. Call to Order and Roll Call

Chairperson Loftus called the meeting to order at 7:02 PM and explained the Plan Commission's function and operating procedure as an advisory body. He described the public hearing protocol, including public comment, and announced that comments would be recorded.

Roll was called. In addition to Chairperson Loftus, Commissioners Arango, Brown, Cooper, Dawson, Saeed, and Wyant were present. Commissioners Kreuzer, Thakkar, and Student Commissioner Smith were absent.

B. Public Comment (non-agenda items)

There were no public comments for non-agenda items.

C. Approval of Minutes

There were no minutes for approval. April 27, 2023, minutes will be presented at the next scheduled meeting.

D. New Business

1.) Public Hearing — 490 Kenilworth Avenue: Frank Johnson Center

Commissioner Brown moved to open the Public Hearing. The motion was seconded by Commissioner Saeed, and the motion passed by voice vote.

Staff Introduction

Sworn in, Martin Scott, Community Development Director for the Village of Glen Ellyn, introduced the project.

Mr. Scott said the Glen Ellyn Park District is requesting approval of a Special Use Permit to construct a new Park District maintenance facility; the new construction would replace existing structures, which would be demolished. Mr. Scott said the Park District also requests approval of a Variation of the Zoning Code, to build a 6-foot fence closer to the street than the principal

structure. He said this is more of a practical request, as it is an irregular site, and the northern area of the property is considered the "front yard" for zoning purposes.

Mr. Scott referred to the April 28, 2023, Staff Report included in the agenda packet, which he briefly outlined. He said the property is approximately two acres, located on the southeast corner of Anthony Street and Kenilworth Avenue. The proposed construction would be an approximately 13,000 square foot single-story building constructed of natural stacked stone and fiber cement (James Hardie) siding. Mr. Scott provided an overview of the proposed access, parking, trash enclosure, landscaping, signage, phasing, and stormwater plans. He said that specific project details can be found in the petitioner's application packet and would be presented by the Park District representatives. With regard to stormwater, Mr. Scott said that the Village Engineer has reviewed the submittal and preliminarily approved the plans. He reported that the project received unanimous approval by the Architectural Appearance Commission.

Commissioner Questions

Commissioner Brown requested clarification regarding the proposed construction start date, as the application packet stated May 15. Mr. Scott acknowledged that the start date would be delayed and said the Park District representatives would provide an update.

Commissioner Dawson asked if Park District representatives had a pre-approval meeting with Village staff. Mr. Scott confirmed this. Commissioner Dawson requested clarification about whether the Commission was considering Special Use approval as opposed to permitted use. Mr. Scott confirmed it is a Special Use Permit request.

Commissioner Dawson said that a number of required elements appeared to be missing from the agenda packet, such as ownership documentation and plat of survey. Mr. Scott confirmed that all of the required items have been submitted to the Village; he said that the agenda packet does not contain the entirety of submittal documents, as that could be burdensome to the commissioners.

Petitioner Presentation: Nathan Trio, Glen Ellyn Park District

Sworn in, Nathan Trio, Superintendent of Planning and Natural Resources at the Glen Ellyn Park District, described the history of the project. He said the Park District took over the property in 1974, and that it is now past its useful life as a viable maintenance facility. He said that a feasibility study was conducted, which considered options including relocating to another site, and renovating the existing building. He said it was concluded that it was most feasible to build a new facility on the existing site. Mr. Troia noted that there would be no expansion of staff or operations; the Park District would continue existing operations in the newly constructed facility. He said the Park District facilitated a public process, including public open houses and showings for adjacent neighbors; he noted that there was good turnout and support for the project.

Commissioner Questions

Commissioner Cooper referenced the code for Special Uses for CR Conservation/Recreation districts. He noted the Special Use for a "Public or private recreational facility where buildings do not occupy more than ten percent of the site area". He requested clarification about the specific Special Use the Park District is seeking. Mr. Troia deferred to the architectural team.

Commissioner Wyant asked about the Park District's feasibility study and opportunities to relocate the maintenance facility. He asked whether a maintenance facility is the best use for the property. Mr. Troia noted the Park District's limited properties and resource constraints for land swaps.

Commissioner Brown asked about the feasibility study and opportunities to renovate the existing building. She asked for clarification about why the existing building was considered unsalvageable. Mr. Troia deferred to the architectural team.

Commissioner Dawson asked about property ownership. Mr. Troia said the Park District took ownership of the property in the 1970s. Commissioner Dawson asked about the Special Use nature of the request. He said that under Special Use zoning there is a limitation for buildings to cover no more than 10% of the lot area. He noted the proposed building plan exceeds the 10% requirement. Mr. Dawson also asked about changes to the planned accessory structure. Mr. Troia deferred to the architectural team.

Petitioner Presentation: Mark Price, FGM Architects

Sworn in, Mark Price, Senior Associate at FGM Architects, presented. He described existing conditions as significantly deteriorated, including structural cracking and HVAC issues. Mr. Price described the project goals as a newly constructed building with an accessory structure for bin storage. He reviewed the proposed site plan, including fencing. Mr. Prices discussed project demolition plans, including demolition of an existing building, accessory structure, and parking surfaces. He discussed the grading plan, noting that the site is relatively flat, as well as the erosion control plan, the utility plan, and the tree preservation plan. He presented the proposed planting plan and discussed site improvements, including an existing driveway through the adjacent park that would be eliminated. Mr. Price described the proposed floor plan, including an office area, centralized maintenance/wash bay area, interior storage, and a small mezzanine. He reviewed the project elevation and photo renderings, noting that the proposed plan would screen the maintenance vehicles from Kenilworth Avenue; currently everything is visible from the street.

Commissioner Questions

Mr. Price responded to prior questions from Commissioners about the Special Use and confirmed that the proposed building would be larger than 10% of the lot area. Commissioner Cooper said that would require a Variance request.

Commissioner Cooper and Mr. Martin discussed their interpretations of code requirements for zoned CR properties, and the conditions for Special Use versus Variance requests.

Commissioner Brown asked for clarification of the use of the property, noting that the application states that the property use will not change. She asked about the wash bay and the kitchenette. Mr. Price said that the operations would not change, that in some cases the proposed plan would provide newly dedicated space for existing operations.

Commissioner Dawson asked for clarification of the square footage of the original buildings versus the proposed building. Mr. Troia said that the two existing structures — the current building and the outbuilding — are comparable in size to the new build. Commissioner Dawson said that a Variance request would need to be submitted regarding the 10% lot coverage rule under Special Use. Commissioner Dawson also referenced the Zoning Code requirements for nonconforming buildings, noting that the Zoning Code allows for ordinary repairs and alterations, but not for reconstruction or replacement of nonconforming buildings. He said a Variance request would also be needed for that. Mr. Price stated that the petitioner would be happy to submit needed Variance requests. Commissioner Dawson said that for several questions on the application, the Park District responds with a single answer of "Correct," and he asked whether Mr. Price could elaborate. Mr. Price said that they indicated agreement with the application statements by responding "Correct," and that he would be happy to provide additional detail if needed.

Chairperson Loftus asked about the size of the fuel tank and its location near an electrical transformer according to the plan; he asked about potential fire safety concerns. Mr. Price said that it is a roughly 100-gallon backup tank; its placement addressed vehicle movement patterns.

Sworn in, Aaron Bruder of CAGE Engineering, responded to questions about the location of the electrical transformer.

Commissioner Dawson asked about proposed surface plans, specifically whether proposed impervious surface square footage would be larger than existing impervious surface. Mr. Bruder confirmed that there would be more impervious surface area with the proposed plan.

Chairperson Loftus asked about the view of the proposed site from the perspective of neighbors on Anthony Street. He also discussed potential safety concerns about the adjacent playground and lack of barriers to the proposed driveway. Commissioner Arango requested clarification on whether the proposed driveway would be open to the playground, aside from planned shrubbery, and Mr. Troia confirmed this was the case with the proposed plan.

Chairperson Loftus requested clarification on the roofline height of the proposed material bin accessory structure and code compliance. Mr. Scott said that to his knowledge, there are not code restrictions with regard to accessory structure roofline heights for non-residential CR districts.

Commissioner Brown noted that the feasibility study was conducted in 2021; she asked whether the existing property has been continually maintained in the interim, or whether it has been allowed to fall into a state of disrepair. Mr. Troia reported that the Park District staff maintains the building to the best of their ability, but that it is not salvageable for the long-term.

Commissioner Arango asked whether the fuel tank could be relocated if it was a fire safety issue. Mr. Price said that the tank is not fixed and could potentially be moved. Mr. Bruder said that fire protection codes were reviewed, and that, generally, fire codes address large tanks, such as 6,000 gallons or more. He said the proposed tank at this site is about 110 gallons.

Commissioner Arango noted that the adjacent playground is geared toward young children and questioned why there was no proposed barrier to the facility's driveway. Mr. Price said that the proposed plan would accommodate visitor parking for the playground. Mr. Troia said that the proposed shrubbery could be extended to create a more effective barrier between the playground and the facility.

Commissioner Dawson asked whether the mezzanine would mean that the proposed building is no longer a single story. Mr. Price said he would confirm, but that typically a mezzanine is allowed in a single-story building within a certain square footage.

Chairperson Loftus asked for additional questions and said that the issue of Special Use and Variation of Special Use remained.

Commissioner Cooper said that his interpretation was that the existing building was nonconforming and could only be repaired, not reconstructed. Commissioner Cooper and Mr. Scott discussed their interpretations of the code regarding nonconforming buildings.

Commissioner Cooper said that for a Variance, there would need to be a finding of hardship.

Public Comments

Chairperson Loftus asked whether there were any emailed public comments. Mr. Scott read an emailed comment from Ursula Bryant, who wrote "Propose to have this center restored and turned into a Senior Center comparable to the Mary Ludko Center in Wheaton. It could be used for extended senior interests including bridge, mahjong etc."

Chairperson Loftus invited public participation. The following individuals, sworn in, made respective comments:

- Zak Wilson, 716 Crescent Blvd: Mr. Wilson said he'd like to see the new Johnson Center and noted that he went to pre-K in the area.
- Patrick Duffy, 236 Anthony St: Mr. Duffy said he's celebrating nine years in Glen Ellyn. He lives at the westernmost house on Anthony Street and has experienced significant water damage issues. He said he has worked with the Village for mitigation. He said he has spent $40,000, and he's concerned about how this project would affect the potential for water damage. Mr. Duffy said his concern is how water will flow after a big rain. He said the structure in place now isn′t able to handle a 100-year rain, which recently occurred twice in one weekend. Mr. Duffy said he'd appreciate the architectural team's consideration of the issue. In response, Mr. Bruder confirmed that the site is a higher flood risk area and said that the project will meet water requirements. He said there is proposed onsite rainwater storage to offset any additional runoff; he said the project would redirect additional water, to the extent possible, to provide relief. Commissioner Dawson said that a final stormwater plan would be required.
- Mark Bushman, 260 Anthony St: Mr. Bushman requested clarification on proposed fencing to north and west of the property, where a bump-out was mentioned. In response, Mr. Price said that the area referenced is completely enclosed in fence.

A motion was made by Commissioner Dawson to close the Public Hearing; seconded by Commissioner Arango, the motion passed by voice vote.

Commissioner Discussion

Commissioner Dawson said that in order to vote yes, he would need amendments addressing items he raised to petitioners, including the 10% requirement and impervious surfaces. He said he would also like to see the nonconformance issue addressed, regarding whether there is a provision for reconstruction or replacement. He said as it stands, he would vote no.

Chairperson Loftus asked whether there were modifications to the draft motion that Commissioner Dawson would make. Commissioner Dawson said the proposed building looks non-residential and non-harmonious.

Chairperson Loftus said he was in favor of the project, with a couple of caveats and changes, including the needed barrier to the playground and a review of the fuel tank near the transformer. He said that for historic preservation, he generally prefers buildings to be rehabbed instead of demolished, but that the bigger picture is what a newer facility for a government entity could do to serve the common good of the Village residents. He recommended making comments to the Village Board about the aspects of the proposal that need to be changed but moving forward with the motion for approval. He said the Park District is operating in a 100-year-old building that

needs a lot of help. He said he visited the site, and that a more modern facility would help staff better perform their jobs.

Commissioner Wyant said he was also in favor of the project. He said there are some screening issues, but that he didn't hear opposition from neighbors. He said from his fellow commissioners, he didn't hear opposition to a new facility, rather concern about details such as mis-categorization around code issues and barrier concerns. He said overall, he was in favor of the project.

Commissioner Saeed said he was in favor of the project, provided all of the objections could be addressed. He said his first thought was that the building should be upgraded, but that if it can't be improved. Mr. Saeed also questioned whether there were asbestos and mold issues.

Commissioner Brown said she was in agreement with Commissioner Dawson. She said the proposed building would be inharmonious with the neighborhood, and the existing building appears more residential. Commissioner Brown said she had concerns about the request and the public notice, questioning whether it was clear to neighbors that the existing buildings would be entirely demolished. She said that in the context of the Village's Comprehensive Plan, she would like to be cognizant of the neighbors and to ask: Is this the highest and best use for this location?

Chairperson Loftus said that land use questions would be up to the property's owner, the Park District, and that the Plan Commission isn't able to approve or deny based on what they would prefer the land to be used for; the commission should approach the request from a code standpoint. Commissioner Brown clarified that the commission could comment if something being built is inharmonious.

Commissioner Cooper said his concern was with following the correct language of the code. He said the project deficits were adequately pointed out in the hearing, and that the Park District demonstrated a willingness to address them. He said the technical aspect of the application could be a problem, though, and that there might not be the right notice, the right arguments, for the specific project.

Chairperson Loftus reminded Commissioners that they are an advisory body, and that the final decision is made by the Village Board. He recommended voting on the draft motion with the following additions: including proposed landscaping modifications to the northern boundary of the reconstruction; and a fire review of transformer and fuel tank.

Commissioner Wyant made the motion:

After conducting a public hearing and deliberating on the requests of the petitioner, Glen Ellyn Park District, to construct a new maintenance facility, associated outdoor storage, and site development located at 490 N. Kenilworth Avenue, the Plan Commission hereby recommends approval based on the findings of fact, as discussed or amended at the Plan Commission public hearing on May 4, 2023 which are hereby incorporated into the Motion by reference as though

fully set forth herein, and a copy of which will be attached to the minutes of this meeting and kept on file as part of the permanent records of the Village. The Plan Commission makes this recommendation of approval with the following conditions:

1. The project shall be constructed in substantial conformance with the plans as submitted and the testimony presented at the May 4, 2023, Plan Commission public hearing.

2. That the proposed landscaping on the site shall be installed in compliance with the approved landscape plan and be continuously maintained in perpetuity.

3. That the proposed structures shall be constructed in compliance with the approved Exterior Appearance.

4. The final stormwater management plan shall be reviewed and approved by the Village Stormwater Engineer prior to the issuance of a building permit.

5. Include proposed landscaping modifications to northern boundary of the reconstruction.

6. Fire review of transformer and fuel tank.

The motion was seconded by Commissioner Arango. Chairperson Loftus asked for a roll call vote. The motion failed on a roll call vote, with:

Three Commissioners present voting "Yes": Chairperson Loftus, and Commissioners Arango and Wyant;
Four Commissioners present voting "No": Commissioners Brown, Cooper, Dawson, and Saeed.

2.) Public Hearing — Proposed Text Amendment

Commissioner Saeed moved to open the Public Hearing. The motion was seconded by Commissioner Dawson, and the motion passed by voice vote.

Staff Introduction

Sworn in, Martin Scott, Community Development Director for the Village of Glen Ellyn, introduced the Proposed Text Amendment: Amendments to Chapter 4 (District Regulations), specifically C3-C6 zoning districts of the Zoning Code pertaining to the designation of tobacco, vape, and smoke shops as special uses.

Mr. Scott said that at the March 9, 2023, Plan Commission meeting a draft text amendment was presented to convert tobacco, vape, and smoke shops from permitted uses to special uses within the C3 district. He said the Commission recommended approval, and the issue proceeded to the

Village Board. Mr. Scott said that at a subsequent meeting, the Board expressed concern that the same level of scrutiny would not be applied to other commercial districts. The Board directed staff to prepare amendments to additional commercial districts.

Mr. Scott said that the amendments are important to address visual blight. He said the Village receives public complaints and that current establishments have received "notices of violation" regarding their signage.

Chairperson Loftus invited public comment.

Public Comment

There was no public comment for this agenda item.

A motion was made by Commissioner Dawson to close the Public Hearing; seconded by Commissioner Saeed, the motion passed by voice vote.

Chairperson Loftus invited a motion.

Commissioner Wyant made the motion:

After conducting a public hearing and deliberating on the requests of the petitioner, the Village of Glen Ellyn, for approval of proposed amendments to Chapter 4 (District Regulations), of the Zoning Code of the Glen Ellyn Village Code, the Plan Commission hereby recommends:

Approval as discussed or amended at the Plan Commission public hearing on May 4, 2023, which are hereby incorporated into the Motions by reference as though fully set forth herein, and a copy of which will be attached to the minutes of this meeting and kept on file as part of the permanent records of the Village, of proposed amendments to Chapter 4 (District Regulations) of the Zoning Code, relating to tobacco, vape, and smoke shop regulations, specifically as they apply to:

- C-3 Service Commercial District
- C-4 Office District
- C5A Central Retail Core Subdistrict
- C5B Central Service Subdistrict and,
- C6 Commercial/Multiuse Planned Development District, of the Zoning Code and of the Glen Ellyn Village Code, and any other necessary adjustments to the Village Code in order to allow for the proposed amendments.

The motion was seconded by Commissioner Dawson. Chair Loftus asked for a roll call vote. The motion passed on a roll call vote, with:

All Commissioners present voting "Yes": Chairperson Loftus, and Commissioners Arango, Brown, Cooper, Dawson, Saeed, and Wyant.

E. Trustee Liaison's Report

Trustee Thompson shared updates on the following:

- The US Bank site was approved by the Village Board, and later by the Park District.
- 411 Main Street property was discussed and successfully negotiated with the petitioner; the exterior appearance was approved.
- There was a hearing for the Comprehensive Plan; there will be additions, and the public hearing will be reconvened.
- The Route 53 and Butterfield Rd intersection will be undergoing major improvements by IDOT, including the addition of sidewalks. The Village will need to agree to maintain the sidewalks.

Trustee Thompson discussed the Commission's vote on the Frank Johnson Center. He encouraged Commissioners to consider submitting detailed questions to planning staff prior to Commission meetings, including legal questions and questions regarding how the code is interpreted.

F. Chair Report

Chairperson Loftus said that he would be unable to attend the Commission's scheduled May 25 meeting. He said Commissioner Dawson agreed to chair the meeting. Commissioners Cooper and Brown said they will not be able to attend the May 25 meeting. Remaining Commissioners will be polled for attendance to ensure quorum.

G. Staff Report

Community Development Director Martin Scott demonstrated how to access the Commission agenda packets online and how to toggle to individual, high-level items. He discussed an email he sent to Commissioners and advised them to contact him for access to the material in its entirety, if needed. He said that Attorney Matthews was working on an opinion for the Commission regarding property values and voting. He discussed the agenda items for the upcoming Commission meeting.

H. Adjournment

Chairperson Loftus adjourned the meeting at 9:30 p.m., following passage by voice vote of a motion by Commissioner Wyant and seconded by Commissioner Cooper.

Respectfully submitted,

Audrey Savikas
Recording Secretary

Minutes
Village of Glen Ellyn
Plan Commission Meeting
Thursday, April 27, 2023
7:00 PM
Glen Ellyn Civic Center, Galligan Board Room

Call to Order – 7:05p.m.

Chairperson Tim Loftus called the meeting to order at 7:05 p.m. and explained the Plan Commission's function and operating procedure as an advisory body. He described the public hearing protocol including for public comment and announced that comments would be recorded. Mr. Loftus introduced Trustee Liaison Anne Gould, Community Development Director Marty Scott, Attorney Greg Mathews, and new student liaison Emma Smith. Roll was called by Chairperson Loftus. Plan Commissioners Arango, Brown, Cooper, Dawson, Thakkar, and Wyant.
Plan Commissioners Kreuzer and Saeed were absent.

Approval of Draft Minutes

Commissioner Brown requested that the March 9, 2023 minutes be modified to clarify her statement on the hens ordinance to read, "that she does not feel well enough informed to make a determination about hens in the Village based on the information provided and the language within the proposed text amendment." Commissioner Thakkar moved to approve the draft minutes with amendment requested by Plan Commissioner Brown of the March 9, 2023, Plan Commission Meeting; seconded by Commissioner Brown, the motion passed by voice vote.

Public Hearing – 525 S. Park Boulevard:

Commissioner Cooper motioned to open the Public Hearing to consider approval of a Special Use Permit, Zoning Variations, and Exterior Appearance to accommodate Phases B-D of the improvements to the Willowbrook Wildlife Center. Seconded by Commissioner Dawson, the motion passed by voice vote.

Sworn in, Community Development Director Marty Scott gave an overview of the project in terms of the AAC review and advised that the Plan Commission would be given a presentation by the petitioner for their consideration of granting the variance.

Chairperson Loftus asked if there were any changes made by the AAC. Community Development Director Marty Scott replied that no changes had been made.

Sworn in, Kevin Horsfall, with the DuPage County Forest Preserve, gave an overview of the project and how it will benefit the community. In the presentation, he stated there are

unique applications for this type of project, and as it meets most of the existing codes, there are some that need to be approved to create the environment needed for the proposed facility.

Sworn in, Scott Steffes, with Wight & Company, introduced himself and then gave an overview of the existing site.

Mr. Steffes then presented the proposed improvements to Willowbrook, speaking about the rehabilitation areas, Visitor's Center/Clinic, animal enclosures, as well as the "back forty." He emphasized that the site design is an effort to bring all elements into harmony to work best for the mission of Willowbrook.

Mr. Steffes took the Commission through the phases of the project. He pointed out the variations in the existing code that the petitioner is requesting approval on.

Mr. Steffes confirmed that the parking is in line with the existing code.

Mr. Steffes reviewed the types of fencing that will be used throughout the project and why they were chosen based on their location and function. He also reviewed the extensive landscaping in the proposal, noting that there is a variance required for the landscaping, specifically the trees.

Mr. Steffes went through the floor plan and elevation for the proposed Visitor's Center/Clinic, explaining the function of each area.

Mr. Steffes moved onto the issue of signage, for which the petitioner is asking for a variance to allow for two signs. He emphasized that this facility is a gem in the community and the only thing changing is the space that the staff and animals need to flourish.

Commissioner Cooper asked if variances were need for the PV (solar). Mr. Scott replied no. He then asked Mr. Steffes how far the fence is from the roadway. Mr. Steffes replied. Commissioner Cooper wondered how a PV array would be useful if there are trees in the proximity and expressed his discomfort with the fence not being dressed from view of the road. Mr. Steffes replied.

Chairperson Loftus added that there is nothing blocking the view from the road currently. He suggested planting some sort of tree that provides cover year-round all the way to the building to block the view of the array. Mr. Horsfall addressed the fence selection and height based on the animal rehab area, and that the plants and trees were selected with the Commission's concerns in mind and to blend in with the site. He added that more shrubs can be added at the fence line.

Chairperson Loft asked if there had been consideration of putting solar on the rooflines. Mr. Horsfall replied that all available roof space is currently being used by solar array, in

addition to the ground array.

Mr. Horsfall addressed the grants that have been obtained or being sought for the proposed renovations, adding that everything that has been applied for has been won, and that private donations are also a factor in the non-taxpayer sources. He said that funding will come from non-referendum bond funds.

Commissioner Cooper motioned to close the Public Hearing. Seconded by Commissioner Dawson, the motion passed by voice vote.

Commissioner Cooper motioned to close the Public Hearing to consider approval of a Special Use Permit, Zoning Variations, and Exterior Appearance to accommodate Phases B-D of the improvements to the Willowbrook Wildlife Center. Seconded by Commissioner Dawson, the motion passed by voice vote.

COMMISSIONER QUESTIONS

Chairperson Loftus asked if the hours of operation would change. Mr. Horsfall replied that the hours may be extended, with special events that might require different hours.

Chairperson Loftus asked if the plan included any changes to the Safari trail.
Mr. Horsfall replied that viewing areas would be created but the trails would not be changed. Loftus suggested looking at this trail to eliminate the tripping hazards. Mr. Horsfall replied that this is in the plan for the trails.

Chairperson Loftus asked about the phasing, and if the Plan Commission was approving Phases B-D in this meeting. Mr. Scott confirmed that this was correct.

Commissioner Arango asked about the fencing issue and its exposure combined with the vegetation being proposed. Mr. Horsfall replied that they will be planted as a hedge with many woody stems. He confirmed that the expected height would be more than the 8' fence height.

Commissioner Cooper brought up that a fence parallel to Park is unfair to the community and hiding it throughout the year is important, emphasizing the winter months. Mr. Horsfall replied that they could add addition planting to thicken the proposed amount of screening.

Commissioner Arango was concerned about the traffic with this project and thanked the Forest Preserve for preparing to control it.

Commissioner Dawson asked about the Traffic Report and its projections. Mr. Horsfall replied with further detail. Commissioner Dawson followed up that he appreciates the prepared package, and he applauds the net-zero efforts but was concerned about the solar arrays being visible.

Commissioner Brown went through the variances being asked for, specifically the tree survey. Community Development Director Scott replied that it is not unusual but does happen, and that this is a unique project with a significant amount of mature trees throughout the site. She also asked if there is a risk for future precedent. Community Development Director Scott replied that there was not concern given the unique aspect of the project. She asked for more information on the tree survey logistics. Mr. Horsfall replied with details of why a tree survey would be detrimental. Mr. Horsfall answered Commissioner Brown's follow-up question regarding the landscaping and management of the site.

Commissioner Brown asked if they expected the visitor count to stay the same, and if the type of visitor will change. Mr. Horsfall replied that the goal is to re-engage people with seeing the animal and exhibits/habitats being presented differently than the current facilities is designed. He emphasized that it would take more of a rehabilitation facility with exhibits to reflect this, as well as educational opportunities in relation to the net-zero goal of the proposed renovations.

Commissioner Wyant asked how success will be measured for Willowbrook. Mr. Horsfall replied that there is a metric in place, as well as visitor numbers when quantifying the facility's success.

Commissioner Wyant asked how net-zero goals will be measured. Mr. Steffes replied that everything will be electronically monitored and testing per grants' requirements to track metrics and goals to ensure criteria is being met. Goals will be met through process efficacies in energy use, building systems, geothermal applications, and lastly the PV panels. Mr. Horsfall spoke to the age and energy inefficiencies of the existing facility.

Commissioner Thakkar had no major concerns. Commissioner Brown wanted to know when more information was being sent – before or after tonight's vote. Chairperson Loftus replied that info was for the Village Board.

Chairperson Loftus talked about the uniqueness of the facility and that he is in support with minor changes on the landscaping on the West side.

Commissioner Dawson voiced his support as well and that the special use is needed.

Student Liaison Emma Smith added her positive comments and that the learning opportunities will be a benefit to the academic community.

Commissioner Cooper motioned to approve the Special Use Permit, Zoning Variations, and Exterior Appearance to accommodate Phases B-D of the improvements to the Willowbrook Wildlife Center. Seconded by Commissioner Brown, the motion passed by roll call vote with Commission members Cooper, Brown, Arango, Dawson, Thakkar,

Wyant, and Loftus voting "yes."

Public Hearing (Continued from March 9, 2023) – 1102 Hill Avenue:

Commissioner Dawson motioned to open the Public Hearing to consider approval of a Special Use Permit to allow the addition of DISH Wireless 5G capable antennas and support equipment to an existing cellular tower (1102 Hill Avenue). Seconded by Commissioner Brown, the motion passed by voice vote. Chairperson Loftus suggested that the public hearing apply to both locations.

Public Hearing – 415 Taft Avenue:

Commissioner Dawson motioned to open the Public Hearing to consider approval of a Special Use Permit to allow the addition of DISH Wireless 5G capable antennas and support equipment to an existing cellular tower (415 Taft Avenue). Seconded by Commissioner Thakkar, the motion passed by voice vote.

PRESENTATION

Community Development Director Scott provided an overview of the request and the history of the review process to date including the initial review and recommendation for approval of the 1102 Hill Ave. request.

Commissioner Cooper asked for clarification on the special uses being asked for by the petitioner. Community Development Director Scott provided project details, specifically the fact that the proposed antenna height of approximately 67 ft. exceeds the 45 ft. maximum height in I1 zoning. He also noted that the Zoning Code also requires a special use permit for any modifications to antenna or support structure which exist as legal non-conforming use.

Commissioner Cooper asked about the Spectrum act and placing antennas on existing structures. He requested that Village Attorney Mathews advise. Attorney Mathews stated that the Village has no authority to regulate 5G requests.

Commissioner Brown asked if the Village has worked with anyone concerning the perception of 5G and its effect on property value within a certain radius of the tower. Attorney Mathews stated that there was not a specific study conducted regarding property values.

Village Attorney Mathews pointed out that the staff and Crown Castle presentations for both of the above addresses relate to the same issues but that the Special Uses are different, thus the combined open public hearing.

Community Development Director Scott gave a history of 415 Taft, as well as an overview

and Special Use being requested. It is a very similar Special Use being asked for the location at the Hill Avenue location.

Sworn in, Karl Camillucci, Attorney for the petitioner, introduced himself and went over how the special use standards would be applied. He began with a broad overview of the proposal for the existing towers that will be modified. Crown Castle owns the towers and Dish Wireless would be leasing the space on the towers.

Mr. Camillucci emphasized that the existing character will not change and there will be no change to the existing height. He added that they will not add hazardous or disturbing elements and do not impose a burden on existing facilities.

Mr. Camillucci stated that there would be no public cost or economic issues associated with the sites. He added that the towers already exist so property values would not be affected. Mr. Camillucci then reviewed the surrounding areas of each site and suggested that there would be minimal impact to these areas since the towers already exist.

Mr. Camillucci stated that the Village's consultant recommends approval of both facilities. He then went into FCC rules applicable to the facilities.

COMMISSIONER QUESTIONS

Chairperson Loftus asked if this information is submitted to the FCC or is it self-review by the petitioner. Mr. Camillucci replied it is used by carriers and local government as a checklist that the FCC criteria has been met.

Commissioner Cooper asked about the restrictions on local regulation of 5G. Mr. Camillucci referred to the Telecommunications Act of 1966 and 6409(a) of the Spectrum Act. He added that both locations satisfy the Spectrum Act. He reiterated that both Crown and Dish endeavor to choose sites that are industrial or commercial to limit the affect.

Commissioner Wyant asked for elaboration on the antennas and the surrounding facilities. Mr. Camillucci replied. Commissioner Wyant followed up by asking if there was a ratio of antenna to equipment cabinets. Mr. Camillucci replied, added that there are a maximum of 4 cabinets per site.

Mr. Camillucci touched on compliance with FCC regulations by Crown and Dish and that the petitioner has submitted proof of compliance for both locations.

Commissioner Brown asked why there was the addition of Taft at this time and not at the first review, and if there are plans for any further towers in the Village. Mr. Camillucci replied that Dish is in start-up mode and in the process of identifying locations, and the Hill Avenue site was ready before the Taft site and because of the return of the request to the Commission, they are both on the agenda together for this meeting. He did not know if

there were plans for additional towers in the area.

Commissioner Brown asked the purpose of the 5G towers was just for Dish. Mr. Camillucci referred this to his colleague Michelle Resch.

Sworn in, Ms. Resch replied that this is specifically for Dish Network, and that other networks are already at 5G.

Chairperson Loftus asked if any of the other frequencies on the towers are 5G.
Sworn in, Mark Philipp, with Dish Network, answered that they are not privy to that information but that the expectation is that all will upgrade.

Commissioner Wyant asked how many antennas were on the towers. Sworn in,
Arial Stouder, with Crown Castle, replied that they do not know the answer to that.
Since Dish is a new carrier, they need a Special Use Permit and other existing carriers do not need to do this process because they are existing. Chairperson Loftus asked Community Development Director Scott for clarification of the change of ownership in relationship to Special Use. Community Development Director Scott replied that change of ownership would not likely require any special use or approval as long as the equipment height did not change.

Ms. Stouder believed that the Hill Avenue site was unincorporated in the past, then annexed by Glen Ellyn, and then abandoned. That is why the Special Use is needed, not the 5G aspect, as explained by Ms. Resch.

Commissioner Cooper asked how the Spectrum Act treats towers that are not in use at this time. Mr. Camillucci replied that the Act refers to the tower itself, not the antennas being leased on it, no matter what that number. He added that there is a provision that deals with structural soundness and regulation, so if there was a "rickety" tower it would not meet criteria, and the two towers in questions do meet the criteria.

Commissioner Brown asked Community Development Director Scott how many active towers exist in the Village. He replied that there are approximately 7 privately owned and 4 publicly owner.

Chairperson Loftus asked if the three criteria on the questionnaire are a self-review.
Mr. Philipp replied that the verification is part of the packet because it is visually presented.
Mr. Philipp confirmed there is not FCC approval. Ms. Resch added insight to this question as well. Bottom line – there is no official oversight, but it can be easily verified by looking at the plan.

Commissioner Arango asked who verifies the structural integrity of the tower.
Mr. Camillucci replied that Crown Castle hired an independent engineering firm that confirmed the towers can bear the weight of the additional antenna.

Commissioner Cooper asked what the Commission could do in terms of granting the Special Use Permit and is the Village actually preempted to not approving. Mr. Camillucci replied "yes."

Commissioner Brown suggested that the property value question might be the only way to deny the Special Use from being granted. Mr. Camillucci replied that both locations have been in place for a long time and the proposed Special Use does not change the landscape.

Commissioner Brown explained that the pushback from other communities has been about the effects of radio transmissions. Mr. Camillucci replied that 5G is not actually a land use issue that a Special Use Permit would be approved for. He reiterated that the existence of the towers and the antennas have done anything to impair property development and enjoyment. He also cited the Telecom Act and its statements about frequencies.

Sworn in, Stuart Chapmen, consultant from MSA, addressed the issue of the criteria to determine if a cell site is exempted from FCC regulation. He reviewed the stats of each tower. He stated that 2000 watts is permitted for this type of antenna and that the proposed antennas are 1500 watts, so the criteria is met. He also stated that the towers meet the Spectrum Act criteria as well. He added that this does not result in a substantial change and thus cannot be denied. On the question of could the Special Use be denied on life-safety issues, the independent engineering studies done confirm that they are structurally sound base on capacity ratings, with these towers having ratings way below the maximum capacity rating. In Mr. Chapman's professional opinion, justification for denial is minimal if at all, and the Federal government is clear that the frequency is not a reason for denial.

Commissioner Thakkar asked, "why Glen Ellyn?" Mr. Camillucci replied that there is no singling out of Glen Ellyn and DISH is just looking at sites to build their new network.

Chairperson Loftus asked if the major transportation routes have anything to do with the locations that the network chooses. Mr. Camillucci replied that sometimes these are a factor to cover gaps in service but there are many other considerations.

Public Comment in opposition to the requests was read into the record from Lawrence Wadler, Kat Kenny-Smith, Lorna Van Tiem, Olive Kaiser, and Dena Wiesner.

In-person comments were given by Nancy Perlman, James McDonnell, Laurie Cooley, Kelly North, Monika Moro, Angel Oakley, and Susie Warden. For myriad reasons, most of which were concern about the adverse health issues of 5G, all of the above residents spoke in opposition to approving the Special Use Permits.

Commissioner Arango motioned to close the Public Hearing to consider approval of both Special Use Permits to allow the addition of DISH Wireless 5G capable antennas and support equipment to an existing cellular tower. Seconded by Commissioner Wyant,

the motion passed by voice vote.

COMMISSIONER DISCUSSION

Commissioner Cooper stated that the public has heard him say that the Commission is basically preempted from any action than approval, except for perhaps height of the antenna and not the use. He added that there has not been a follow-up on this, and that he has heard from numerous individuals that 5G is the same as infrastructure such as roads and residents are concerned about up-to-date infrastructure. He does not see a reason to deny but does not like the position the Commission has been put in in regard to receiving some of the meeting materials just prior to the meeting.

Chairperson Loftus suggested that in the past people thought early mobile phones would be harmful, yet this has not happened. He added that many public comments suggest to "follow the science," and he doesn't believe 5G is safe, or unsafe, because data can be manipulated to say whatever the desired outcome of the source. Counsel has advised there is no denying the petitioner based on 5G and he sees no reason to deny the request based on any other information that he has.

Commissioner Brown stated she is going to vote "no" based on property value concerns. She added that the Commission can hold off and wait to make a final decision.

Commissioner Thakkar stated that on a regulation perspective, the criteria has been met to approve. As far as health, he believes both sides are supported by the "fact." He felt that property value may be the path to stop or at least reconsider the issue.

Commissioner Wyant didn't think that property value was considered in the packet of information. He wondered if there was evidence that the adoption of 5G has an impact on property value and felt it would be easy to submit. He would like this information before deciding.

Commissioner Dawson gave a background of his telecommunications experience. His considerations are the height and the felt that the higher a tower is, the better. He supports both towers, saying that United Kingdom, Canada, and others support the FCC rules. He added that he would not want to live in a town without 5G.

Chairman Loftus read comments from Commissioner Kreuzer, who was not in attendance, stating his favorable view of the requests.

Commissioner Arango sympathized with the possible health issues and concerns stated by the residents. She felt the volume of information given to the Commission was hard to ingest but she trusts the scientific information and the progression of society will not be stopped by denying 5G to the petitioner.

Commissioner Cooper asked Commissioner Brown about the property value issue and if that was actually one of the things that they are able to consider. He sought the advice of Village Attorney Mathews on this matter.

Commissioner Cooper moved to table the vote to a meeting in the near future in order to attain further information on 5G and the effect on property values.

Village Attorney Mathews advised that if this is not approved within 60 days, then it may be considered automatically approved by default.

Chairperson Loftus was frustrated with the postponing of the vote. Village Attorney Mathews reiterated that in his opinion remains that the Plan Commission has no authority to deny the petition due to the 5G frequency. Commissioner Wyant thanked him for the clarification but wondered about getting more information about the effect on property values, whether based on fact or myth. The question to be answered: can they consider property value or is it limited. Attorney Mathews agreed that he would research the issues related to property value and the Commission's authority and provide a response to the Commission.

Mr. Camillucci stated there is no way to definitively say if property values will be affected because it is impossible to isolate all of the forces that influence property value, and he explained this line of thinking in a bit more depth. Mr. Camillucci added that the 60-day time limit is probably already expired on the Hill Avenue location. He added that under the Spectrum Act, the concern cannot be considered.

Village Attorney Mathews reinterred what he had already said about the property issue, and that he will write a formal legal response and the 60-day time constraint. He added that a violation on the timeframe needs to be addressed in court.

Commissioner Cooper motioned to table the approval of both Special Use Permits to allow the addition of DISH Wireless 5G capable antennas and support equipment to an existing cellular tower to the May 25, 2023, meeting. Seconded by Commissioner Wyant, the motion passed by roll call vote with Commission members Cooper, Wyant, Arango, Brown, and Thakkar voting "yes," and Commission members Loftus and Dawson voting "no."

Discussion and Recommendation

Proposed Zoning Text Amendments: Possible amendments to the Zoning Code relating the keeping of hens.

Comments from Billy Joe Mills, resident, in favor of allowing hens to be kept in the Village were read into the record.

Commissioner Cooper motioned to table the approval of possible amendments to the Zoning Code relating the keeping of hens to the May 25, 2023, meeting. Seconded by Commissioner Thakkar, the motion passed by voice vote.

Adjourn – 11:36pm

Chairperson Loftus adjourned the meeting at 11:36 p.m., following passage by voice vote of a motion by Commissioner Wyant and seconded by Commissioner Thakkar.

Respectfully submitted,
Caren Cosby
Village Clerk

DRAFT

Lori Gloude

From: Penni Cannova
Sent: Thursday, April 27, 2023 4:21 PM
To: Lori Gloude; Martin Scott
Subject: FW: Online Form Submittal: Village Board Public Comment Form

Another comment for Plan Commission -

Penni Cannova
EXECUTIVE ASSISTANT | DEPUTY CLERK

VILLAGE OF GLEN ELLYN
535 Duane Street | Glen Ellyn, IL 60137
Office: (630) 547-5202
www.glenellyn.org

eNEWS

From: noreply@civicplus.com <noreply@civicplus.com>
Sent: Thursday, April 27, 2023 4:01 PM
To: Mark Franz <mfranz@glenellyn.org>; Emily Rodman <erodman@glenellyn.org>; Penni Cannova <pcannova@glenellyn.org>; Village Clerk <VillageClerk@glenellyn.org>
Subject: Online Form Submittal: Village Board Public Comment Form

[EXTERNAL EMAIL]

Village Board Public Comment Form

If you wish to offer public comment, or if you would like your name read into the record with a stated position, please complete this form. Per the Village's typical audience participation policy, members of the public are welcome to speak for up to three minutes.

First Name	Kat
Last Name	Kenney-smith
Organization	*Field not completed.*
Email Address	Katatonic2@comcast.net
Address	255 linden street
City	Glen ellyn
State	IL
Zip Code	60137
Meeting Name	5G
Is your comment related to an agenda item?	Yes
Agenda Item or Subject	5G towers in our village
Comment	I am adamantly against putting 5G towers in our village. In addition to them being dangerous to our health, they are aesthetically unpleasing to the look of our village. I know most of Hinsdale 2as against them and they passed it anyway. I hope you will be more conscientious of your citizens and what THEY want not what you, the Village board wants. This will be a huge deterrent to people thinking about moving here. I would not move to any town that installs these. In fact, if installed it will give me pause to consider moving out of this town. Regards, Kat Kenney-Smith

Your comments will be placed on file and read into the record.

Email not displaying correctly? View it in your browser.

Lori Gloude

From: Penni Cannova
Sent: Thursday, April 27, 2023 4:23 PM
To: Martin Scott; Lori Gloude
Subject: FW: Online Form Submittal: Village Board Public Comment Form

Plan Commisison comment -

Penni Cannova
EXECUTIVE ASSISTANT | DEPUTY CLERK

VILLAGE OF GLEN ELLYN
535 Duane Street | Glen Ellyn, IL 60137
Office: (630) 547-5202
www.glenellyn.org

eNEWS

From: noreply@civicplus.com <noreply@civicplus.com>
Sent: Thursday, April 27, 2023 4:22 PM
To: Mark Franz <mfranz@glenellyn.org>; Emily Rodman <erodman@glenellyn.org>; Penni Cannova <pcannova@glenellyn.org>; Village Clerk <VillageClerk@glenellyn.org>
Subject: Online Form Submittal: Village Board Public Comment Form

[EXTERNAL EMAIL]

Village Board Public Comment Form

If you wish to offer public comment, or if you would like your name read into the record with a stated position, please complete this form. Per the Village's typical audience participation policy, members of the public are welcome to speak for up to three minutes.

First Name	Kelly
Last Name	north
Organization	*Field not completed.*
Email Address	kelly.north@att.net
Address	713 Buena Vista Drive
City	Glen Ellyn
State	Illinois
Zip Code	60137
Meeting Name	Plan Commission Meeting
Is your comment related to an agenda item?	Yes
Agenda Item or Subject	5G

Comment

I am Kelly North and a resident of Glen Ellyn. I am sensitive to wireless radiation.
I know there are several residents of the Village who have been speaking to you all about the concern with 5G. I believe they have shared data points on the science of why this is a health hazard. I thought it might be helpful for me to describe what being sensitive to wireless radiation is like.
As an example, several months ago I was on a 2.5 hr Zoom call in my home office. By the time we reached the last 30 minutes of that call, I had begun doubling over in pain. Sudden and acute pain in my abdomen. We ended the call, I left my office and within 5 minutes I was feeling better, nearly back to normal.
This is not at all normal for me. I then recalled that ATT had been out the day before changing the service on one of my phone lines. I got my meter to measure the wireless radiation, and sure enough, it was 1500 times stronger than the recommended safe limit. I normally keep my wireless disabled in my home. The modem is only 5 ft from my desk. I quickly disabled the wireless again and was fine for the balance of the day.
This simple 2-hour exposure caused me to double over in pain. That doesn't happen every time I am exposed to wireless, some symptoms are more subtle. In this event, it was a very high exposure. I live in an unincorporated area of the Village and have a utility pole directly in front of my house so I am very

concerned.
Just like asbestos and smoking were at one point considered safe, people mistakenly believe that 5G is harmless. Robert Kennedy Jr, now a presidential candidate, is championing the effort against 5G to protect the health of our children. This knowledge is becoming mainstream and the far majority of lectures / studies I hear on Building Biology speak about EMF concerns.
I urge you, if there is any doubt at all in your mind about the safety of 5G, please pull back and do not allow the roll out of 5G throughout Glen Ellyn.
Thank you.

Your comments will be placed on file and read into the record.

Email not displaying correctly? View it in your browser.

Village Board Public Comment Form

If you wish to offer public comment, or if you would like your name read into the record with a stated position, please complete this form. Per the Village's typical audience participation policy, members of the public are welcome to speak for up to three minutes.

First Name	Olive
Last Name	Kaiser
Organization	*Field not completed.*
Email Address	jka8168@gmail.com
Address	427 S. Lincoln St.
City	Addison
State	IL
Zip Code	60101
Meeting Name	Planning Commission
Is your comment related to an agenda item?	Yes
Agenda Item or Subject	5g towers, Smart City
Comment	No 5g, period. I have children and grandchildren and ill inlaws not far away for whom I am extremely concerned. Thank you.

Your comments will be placed on file and read into the record.

First Name	Lorna
Last Name	Van Tiem
Organization	*Field not completed.*
Email Address	Curecf86@gmail. Com
Address	86 S Parkside
City	Glen Ellyn
State	Illinois
Zip Code	60137
Meeting Name	Planning commission
Is your comment related to an agenda item?	Yes
Agenda Item or Subject	5G towers
Comment	Please vote no on 5G towers There are too many unknown and potentially harmful health effects. The FCC has not updated their health guidance or studies in 26 years. Technology has certainly changed dramatically during all those years. We can't risk our residents health with these unknowns Also it is estimated that property values decline up to 20% when near towers. This is a huge negative impact on residents that will flow through to the village and local school districts too Again please vote no

Your comments will be placed on file and read into the record.

Email not displaying correctly? View it in your browser.

Village Board Public Comment Form

If you wish to offer public comment, or if you would like your name read into the record with a stated position, please complete this form. Per the Village's typical audience participation policy, members of the public are welcome to speak for up to three minutes.

First Name	Dena
Last Name	Wiesner
Organization	*Field not completed.*
Email Address	*Field not completed.*
Address	*Field not completed.*
City	Glen Ellyn
State	IL
Zip Code	60137
Meeting Name	*Field not completed.*
Is your comment related to an agenda item?	Yes
Agenda Item or Subject	5G towers
Comment	Since we already know that radiation from towers, cell phones, wifi devices harm people; why would Glen Ellyn consider adding more of these harmful towers. Example: My friend cannot walk because of burning in her feet from all the radiation she experiences from living in this area. I am also a person who has EMF sensitivity. I will no longer be able to live or shop in Glen Ellyn if these towers are installed. Please protect the residents of Glen Ellyn and vote no to the installation or 5G towers. Thank you.

Your comments will be placed on file and read into the record.

April 27, 2023

Good evening, Plan Commission members. Thank you for your service to our wonderful village.

I'm Nancy Perlman, a resident of Glen Ellyn. For four years, I have been part of a leadership team in Illinois who have been speaking with local officials, working on legislation with Illinois legislators, including Senator Glowiak and Representative Mazzochi, educating the community and our Illinois legislators on the 4G/5G topic. I am here to work with you and stand with you.

I am asking that you deny the approval of the Special Use Permits to Crown Castle and DISH Wireless so there is time to assess what this would really mean for our community and to thoroughly access this applicant's RF compliance.

Attorney Andrew Campanelli, an expert on the Telecommunications Act of 1996, Small Wireless Facilities Deployment Acts like ours in Illinois, and who reviewed and made suggestions on the Western Springs wireless ordinance, spoke on a recent webinar. Here's what he said: "So right now, I've seen applications from parts of the entire United States. Right now, I would say that in 95% of the applications, they contain patently false and materially misleading information." "Fraudulent FCC compliance reports are used all the time." So I invite you to consider that.

At the Feb. 13th village board meeting and April 15th Tea with the Trustees, I shared information I felt was important for them to consider.

I spoke with a former FCC NEPA Attorney who said that with this type of application, there's the requirement under the federal law NEPA (National Environmental Policy Act), a report from an RF engineer, proving that DISH wireless is complying with the FCC rules concerning human exposure to radio frequency radiation. I reviewed the one-page letter written by a DISH RF engineer. It isn't a report. It is a letter you or anyone of us could have written saying that DISH shall comply with the FCC rules. We need a real independent RF report, which is required by Federal law and I highly recommend it be reviewed by an independent RF engineer of the village's choosing.

I don't see a full FCC RF compliance report in the agenda packet. Has Crown Castle and DISH Wireless provided one?

I looked online to try to find what these fujitsu antennas that would be placed on the macro towers are capable of emitting at the lowest to the highest output levels. I couldn't find anything listed. Do you happen to have that information? https://www.fujitsu.com/global/products/network/solutions/5gran/

Even if the applicant could prove they are in compliance with the FCC, the FCC's guidelines for safety limits for human exposure were found to be arbitrary and capricious in federal court in 2021. The FCC lost that lawsuit. For the last 1 ½ years, the FCC is supposed to have been reviewing thousands of pages of independent peer-reviewed scientific studies and letters from people whose health has been injured from the accumulated exposure to this technology, proving biological harm from 3G and 4G technology. Unfortunately, this wireless infrastructure has been released into the environment without proper oversight and proof of safety.

So there is a lot to consider here.

I have been attending the village board meetings in Hinsdale, Western Springs, and Clarendon Hills, where Crown Castle threatened to sue them if they didn't water down their ordinance and sign their settlement agreement to allow over 200 small cells in their villages as an infrastructure for a Smart city,

even though many residents and the board didn't want them. And that is just the beginning in their villages.

Crown Castle provided an RF compliance report to those villages that didn't show what the antennas are capable of. I consulted with Marv Wessel, an independent RF engineer and CEO of Global RF Solutions, trains and consults with people at the FCC and has been written about in the Wall Street Journal. He said the report was an illusion that they are being compliant. It is a misquoted and misguided incomplete report.

The plan for Hinsdale by Crown Castle and Verizon is 137 small cells in a village the size of 4.66 square miles. Glen Ellyn is 7.05 square miles. How many would that be for us, 275? How many small cells do they need to put up in front of resident's homes in our village to make us into a Smart city? This is the first version of the map from Verizon of the plan for the 3 villages. This is just the beginning. Do we want Glen Ellyn to look like this?

Has there been anyone from the village asking to be a Smart City?

Does the Plan Commission want to sign Glen Ellyn up to be a Smart City?

Please, take time to thoroughly consider all the information. I am requesting you vote to deny the Special Use Permits. Thank you.

Respectfully submitted,

Nancy Perlman

Marvin Wessel, RF Engineer – Wall Street Journal Article

https://www.wsj.com/articles/cellphone-boom-spurs-antenna-safety-worries-1412293055

Cellphone Boom Spurs Antenna-Safety Worries

Many Sites Violate Rules Aimed at Protecting Workers From Excessive Radio-Frequency Radiation

Radio-frequency engineer Marvin Wessel has taken readings at more than 3,000 cellphone antenna sites across the country.ILLUSTRATION: RYAN KNUTSON

By Ianthe Jeanne Dugan and Ryan Knutson

Follow

Oct. 2, 2014 7:37 pm ET

PRINT

TEXT

17

The antennas fueling the nation's cellphone boom are challenging federal safety rules that were put in place when signals largely radiated from remote towers off-limits to the public.

Now, antennas are in more than 300,000 locations—rooftops, parks, stadiums—nearly double the number of 10 years ago, according to the industry trade group CTIA.

Federal rules require carriers to use barricades, signs and training to protect people from excessive radio-frequency radiation, the waves of electric and magnetic power that carry signals. The power isn't considered harmful by the time it reaches the street, but it can be a risk for workers and residents standing directly in front of an antenna.

One in 10 sites violates the rules, according to six engineers who examined more than 5,000 sites during safety audits for carriers and local municipalities, underscoring a safety lapse in the network that makes cellphones hum, at a time when the health effects of antennas are being debated world-wide.

The FCC has issued just two citations to cell carriers since adopting the rules in 1996. The FCC says it lacks resources to monitor each antenna.

NEWSLETTER SIGN-UP
Technology
A weekly digest of tech reviews, headlines, columns and your questions answered by WSJ's Personal Tech gurus.
Preview
Subscribe

"It's like having a speed limit and no police," said Marvin Wessel, an engineer who has audited more than 3,000 sites and found one in 10 out of compliance.

On a sweltering June day in Phoenix, Mr. Wessel strolled through a residential area near Echo Canyon Park and spotted lawn chairs near a T-Mobile US Inc. cellular antenna painted brown to match a fence. His monitor showed emissions well above safety limits.

After being alerted by The Wall Street Journal, T-Mobile added warning signs and roped off a patch in front of the antenna with a chain. "The safety of the public, our customers and our employees is a responsibility that all of us here at T-Mobile take very seriously," said a T-Mobile spokeswoman.

At very high levels, radio-frequency radiation can cook human tissue, the FCC said, potentially causing cataracts and temporary sterility and other health issues.

To buffer people from these "thermal" effects, the FCC set two limits for how much RF people can absorb—one for the general public, and an "occupational" limit five times higher for people trained to work near antennas. The higher level is still 10 times below the thermal level.

Carriers have to restrict access near antennas that are above the limits. Workers and others who venture into hot zones—generally up to 20 feet in front of an antenna—must be trained and have RF monitors.

Most cellular antennas aren't strong enough to cause thermal problems, engineers say, and carriers are installing some smaller antennas with lower power levels. But some are being made stronger to meet demand for high-speed Internet access, high-definition video and other services. A German study in 2013 found higher emissions from 4G antennas.

"The more bandwidth, the hotter they will be," said Mr. Wessel, who expects some to exceed the thermal level within a year.

Richard Tell, a Nevada engineer, also expects some emissions to rise. At more than 1,000 sites nationally, he found roughly one in 10 out of compliance, similar to Mr. Wessel's conclusion. Some are hidden or disguised for aesthetic reasons.

"I've been on rooftops looking for antennas and couldn't find them because they were hidden in fake concrete blocks that were really foam," he said.

Daniel Ranahan, a Lowell, Mass., roofer, said antennas are slowing jobs. "There's no mechanism for the worker to know what buildings are safe," he said.

Peter Chaney, the director of safety and health for the Mechanical Contractors Association of America, which represents companies with more than 270,000 workers, in August asked the FCC to create a database of cellular antennas.

One company, RF Check, in San Diego, has designed a protocol but requires collaboration from carriers and funding from phone customers.

Mr. Chaney is developing a training video and brochure on RF safety to distribute to the association's members next year.

"We want workers to know that the antennas are there and that there may be a potential hazard," he said. "I'm concerned about the chronic effect of this. If guys have 30-year careers and they're exposed to these things on a regular basis—is there any long-term effect?"

Advertisement - Scroll to Continue

The National Institute for Occupational Safety and Health began studying that question after the World Health Organization in 2011 categorized RF radiation as a possible carcinogen, based on research by over 30 scientists, said Gregory Lotz, the top RF expert for Niosh. And the National Toxicology Program at the National Institutes of Health is exploring lower-level RF exposure.

An FCC guideline written after the rules were adopted notes studies showing "relatively low levels" of RF radiation can cause "certain changes in the immune system, neurological effects, behavioral effects," and other health issues, including cancer. "Results to date have

been inconclusive," however, the agency said in a guide to radio-frequency radiation, and need to be studied further.

Among those concerned is Gilbert Amelio, a scientist who was chief executive of Apple Inc. and National Semiconductor and a board member of AT&T Inc. He believes industry leaders will "take whatever steps may be necessary to prevent harm to workers or others who may have good reason to be close to these sites."

Jimmy Crespo complained to federal labor regulators in 2011 that he became disabled with cognitive issues after working more than 300 times on heating and cooling systems for antennas for Johnson Controls Inc., a Sprint Corp. contractor.

"I had no training, no monitoring devices and no warning from my employer," Mr. Crespo said.

Regulators asked Johnson to ensure the rules were being followed. Johnson said it no longer had the contract, and Sprint said the systems were a safe distance from antennas.

"Employees were not working in an area where radio frequencies would pose a hazard," a Johnson spokesman said.

Sprint said annual checks show all sites are compliant.

AT&T said it places "the utmost importance on the safety of workers and the public from RF emissions and we have a rigorous safety program in place to minimize exposure to RF emissions."

The FCC in April signed a consent decree with Verizon Communications Inc. to settle RF violations in Pennsylvania and Connecticut, involving an unlocked rooftop and a missing sign. Verizon agreed to pay $50,000 and to train employees and contractors, and check other sites.

The carrier has told regulators that property owners complicate compliance.

"In New York City, condominium tenants became upset and concerned with RF notification signs we placed on a terrace access point," Tamara Preiss, Verizon's vice president of federal regulatory affairs, wrote to the FCC in February. Ms. Preiss said the signs were removed after the tenants hired a lawyer.

Insurers are becoming concerned. "The risk is often transferred to 'unsuspecting' property owners," Roger Egan, executive chairman of Risk Strategies Co., told the FCC.

Hartford Financial Services Group Inc. and A.M. Best Co., the insurance-rating agency, have flagged RF as an emerging risk. Swiss Re wrote in a 2013 report that if RF radiation is linked to health problems it "could ultimately lead to large losses."

Write to Ianthe Jeanne Dugan at ianthe.dugan@wsj.com and Ryan Knutson at ryan.knutson@wsj.com

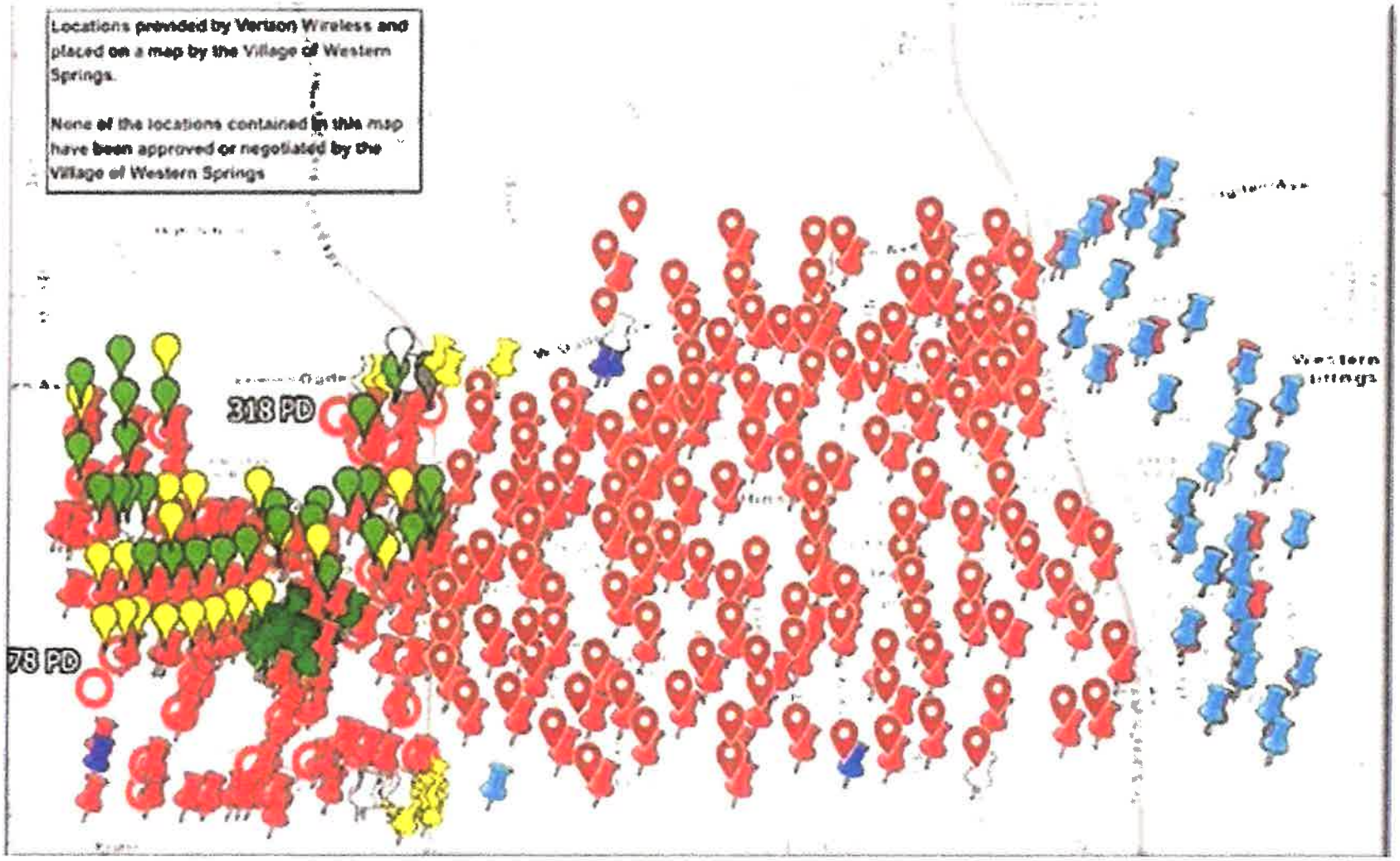
Locations provided by Verizon Wireless and placed on a map by the Village of Western Springs.
None of the locations contained in this map have been approved or negotiated by the Village of Western Springs
318 PD
78 PD

Glen Ellyn Plan Commission
535 Duane Street
Glen Ellyn, IL 60137

Meeting 5/25/2023 7:00 PM
Department: Community Development
Department Head: Marty Scott
Category: Commission Recommendation
Prepared By: Marty Scott

AGENDA ITEM (ID # 2023-574)

DOC ID: 2023-574

1102 Hill Avenue: Special Use Permit to allow the addition of DISH Wireless 5G capable antennas and support equipment to an existing cellular tower.

Statement of the Issue:
Please see the attached staff report.

Analysis:
Please see the attached staff report.

Budget Impact:
N/A

Contribution to Strategic Plan (if applicable)

Action Requested:
The Plan Commission may make a recommendation to the Village Board for approval, approval with conditions, or denial of the request.

Attachments:
1. PC Staff Report 1102 Hill SUP Presentation-5-25-23
2. Crown Castle - 1102 HIll and 415 Taft - Legal Analysis - Letter to Plan Commission
3. Crown - 1102 Hill and 415 Taft, Glen Ellyn - Letter to Village Attorney - Executed and Compiled
4. Ancel Glink's Memorandum, dated March 1, 2023
5. Petitioners' SUP Application Packet, dated April 2, 2022
6. Draft Findings of Fact
7. Draft Motion to Approve
8. Zoning Map
9. Aerial Map
10. Plat of Survey
11. Public Hearing Notice
12. Public Hearing Notification Map
13. Eligible Facility Request Cover Letter, dated February 1, 2023
14. DISH Wireless Narrative Statement, dated February 2, 2023
15. Dish Wireless Cell Site Report 1102 Hill Ave Glen Ellyn 042523

16. Dish Wireless Cell Site Report 415 Taft Ave Glen Ellyn 042623
17. DISH Wireless RF Statement, dated September 14, 2022
18. Construction Drawings, stamped received July 14, 2022
19. Structural Analysis, stamped received July 14, 2022
20. 5G Infographics
21. Comprehensive Plan Excerpts
22. Lombard Ordinance 3565 – Conditional Use approval
23. Ordinance 6164 – Annexation Agreement
24. Ordinance 6207 – Creation of I1 Zoning District
25. Ordinance 6631 – Annexation
26. Ordinance 6632 – Zoning Map Amendment, change to I1
27. Draft Minutes from December 8, 2022 Plan Commission Meeting
28. Minutes from February 13, 2023 Village Board Meeting

STAFF REPORT

TO: Glen Ellyn Plan Commission

FROM: Marty Scott, Director of Community Development

DATE: May 19, 2023

FOR: May 25, 2023 Plan Commission Meeting

SUBJECT: OBO Crown Castle USA Inc. & DISH Wireless LLC – 1102 Hill Avenue – Special Use Permit

---

PETITIONER: The petitioners are Crown Castle and DISH Wireless, represented by Tony Phillips and Ariel Stouder of Fullerton Engineering, as licensee of a portion of the property located at 1102 Hill Avenue.

REQUEST: Crown Castle and DISH Wireless are requesting approval of a Special Use Permit in accordance with Sections 10-8-7 and 10-4-19(E)3 of the Glen Ellyn Zoning Code to allow an addition of DISH Wireless 5G capable antennas and support equipment to the existing cellular tower.

PUBLIC NOTICE: Notice of the public hearing was published in the February 21, 2023 edition of The Daily Herald advertising a public hearing to be held on Thursday, March 9, 2023. Notices were mailed to property owners within 350 feet of the subject property in addition to an expanded group of residential properties as shown in the attached Public Hearing Notification Map. A placard was also placed on the site. The March 9, 2023 hearing was continued until April 27, 2023. (The hearing was opened on April 27, 2023, and public comment and Commission discussion ensued. The Commission closed the hearing and tabled the request until the May 25, 2023 meeting).

LOCATION/ SURROUNDING USES: The subject structure is located on the north side of Hill Avenue between Route 53 and Walnut Road in the I1 Light Industrial District. The existing establishment on the site is currently occupied by Safe Seal – Chicago Basement Waterproofing. The surrounding zoning and land uses are as follows:

Surrounding Land Uses:	Surrounding Zoning:
North: Churchill Woods and Union Pacific Railroad	CR Conservation Recreation & R-4 DuPage County

South:	Industrial Equipment Supplier	I1, Light Industrial District
East:	Distribution Service Corporation	I1, Light Industrial District
West:	Electrician Service Corporation	I1, Light Industrial District

COMP PLANS: According to the 2001 Glen Ellyn Comprehensive Plan, "this area should be improved and upgraded as a limited and self-contained business area. Compatible new light industrial and high-tech uses would also be appropriate" (pg. 18). The 2023 Draft Comprehensive Plan recommends that the Village's light industrial areas "should continue to be maintained to support the Village's industrial base" (pg. 10).

STRATEGIC PLAN: The 2020-2022 Strategic Plan identifies an initiative of successful growth, development, annexation & business retention. One of the measures of success for that initiative includes the annexation of industrial properties on the south side of Hill Avenue, across the street from the subject site.

PROJECT HISTORY: Historic Timeline: Parcel 05-12-207-033, currently addressed 1102 Hill Avenue, was previously located within the Village of Lombard corporate limits, and zoned I Limited Industrial District. In 1992, Village of Lombard granted a Special Use Permit to construct an 87-foot-tall monopole antenna at the rear of the subject property (Ordinance 3565). Sometime between 1992 to 2013, the subject property was de-annexed from Village of Lombard and the address was changed to 21W180 Hill Avenue, in unincorporated DuPage County. At this time, the property was zoned DuPage County I-1 Light Industrial District. The property owner signed an annexation agreement with the Village of Glen Ellyn in 2013 (Ordinance No. 6164). Consequently, in 2014, the Village of Glen Ellyn created a new zoning district, I1 Light Industrial District, to accommodate the incoming industrial use (Ordinance 6207). The property was officially annexed into the Village of Glen Ellyn in 2018 with the address 1102 Hill Avenue (Ordinance No. 6631). Upon annexation, consistent with the annexation agreement, a Zoning Map Amendment was approved (Ordinance 6632) rezoning the property to I1 Light Industrial District. Currently, the cellular tower's height is 70 feet, which exceeds the maximum allowable height of 45 feet for structures located in the I1 Light Industrial District. As no Special Use Permit has been granted by the Village of Glen Ellyn, the cellular tower is considered legal non-conforming to Glen Ellyn Zoning Code.

December 8, 2022 Plan Commission: The Plan Commission discussed the addition of a 5G capable antenna to the tower and expressed concerns on

the subject and their desire for the Village Board to be notified of this. Commissioners also clarified with staff that if another carrier wanted to co-locate on the tower alongside the DISH Wireless antenna, they would have to seek a separate Special Use Permit. Commissioners noted that the granting of this Special Use Permit would serve as a reuse of a currently unused structure. No one from public spoke in favor or against of the request. By a vote of 7-1, the Plan Commission recommended approval of the request, subject to the following conditions:

1. That the new DISH Wireless antenna added to the existing cellular tower be operated in substantial conformance with the application materials submitted and testimony presented at the December 8, 2022 Plan Commission public hearing and before the Village Board of Trustees; and
2. That it be stated to the Village Board of Trustees that a purpose of the installation is for 5G.

After the Plan Commission meeting, staff spoke with the petitioner to seek further clarification on the topic and asked that the petitioner provide a Narrative Statement (attached) that explicitly outlines the use of 5G and the concerns that were expressed.

February 13, 2023 Village Board: The Village Board discussed the installation of the antennas, the safety of residents from 5G technology, and the legal jurisdiction of the Village Board to review and regulate such Special Use Permit requests. Nancy Perlman, a Glen Ellyn resident, spoke in opposition of the request and urged the Board to not approve or at least table the request until 5G's impacts on the community are further researched. One of the Trustees inquired whether the distributed public notice detailed the 5G capability of the proposed DISH Wireless, to which staff responded no. After deliberations, Village Board decided to remand the request back to the Plan Commission and requested re-notification of all properties within 350 feet of the subject site, with specific reference to the 5G installation, to give more people a chance to voice their opinions. A March 9, 2023 Commission hearing was scheduled but was continued (at the request of the applicant) until April 27, 2023.

April 27, 2023 Plan Commission: The Plan Commission opened the public hearing on April 27th to solicit comments regarding both the 1102 Hill and 415 Taft requests. The public comment focused on concerns regarding 5G's impact on the health of residents. The comments are included with the draft minutes. The Commission listened to testimony from representatives from Crown Castle, Dish Wireless, and others before deliberations began. The Commission ultimately decided to close the

public hearing and table the issue until the May 25, 2023 meeting. The Commission requested that the Village Attorney provide an opinion relating to the Commission's review of the request in relation to property values. Attorney Mathews has provided this information directly to the Commission in a confidential memorandum. The Crown Castle submittal remains unchanged from previous reviews and the same meeting materials have been provided again for your review.

PROJECT SUMMARY:

The petitioners are proposing to replace the existing vacant carrier antennas and associated equipment on the existing cellular tower with new DISH Wireless entry port, antennas and radio equipment. At the base of the tower, within the fenced compound area, an ice bridge, a 5' by 7' metal platform, and an equipment cabinet will be installed. The proposed additions will neither increase the height of the tower nor the existing leased ground footprint. The proposed DISH Wireless antennas will be unmanned and will only require power and fiber connections that already exist on the site. It will require service by a technician approximately once a month.

In addition to the above-mentioned services, the proposed antenna equipment would support 5G technology. The petitioner has provided a Radio Frequency (RF) interference statement provided by DISH RF Engineers to confirm that all frequencies utilized by DISH Wireless shall follow guidelines enforced by the Federal Communications Commission (FCC). The FCC grants licenses for the use of certain radio frequencies exclusively by wireless service providers, including DISH Wireless, which shall use certain frequencies (channels) on which to transmit and receive radio signals. Pursuant to these licenses, DISH is authorized to provide wireless service nationwide. Per petitioner's narrative statement, the proposed DISH antennas will comply with all FCC rules regarding interference to other radio services and human exposure to radio frequency energy and will not present any detrimental effect to the community public safety, health and/or welfare, even with the 5G technology capability.

The proposed antenna will be installed on top of the pole at approximately 67 feet high. According to the petitioner, the cellular tower at 1102 Hill Avenue has been selected to fill a gap in the DISH Wireless network as the tower's height and location are important factors in determining how network coverage can be expanded. The petitioner adds that the higher the structure is the farther the coverage will extend. Per Section 10-4-19(B)18, television and radio towers and antenna support structures that exceed district's maximum height, will require a Special Use Permit. Given the maximum allowable height of 45 feet in I1 District, the proposed antenna

will require approval of a Special Use Permit. Section 10-4-19(E)3 confirms the requirement for a Special Use Permit stating that "the height of a television or radio tower, antenna support structure… shall be specified in the ordinance granting a special use permit". As proposed, the maximum height will be set as 70 feet in the associated ordinance.

Zoning Code Section 10-8-7 also states that the "lawfully existing, nonconforming use of part or all of a building or structure, all or substantially all of which building or structure is designed or intended for a use permitted in the district in which it is located, may be continued" subject to the provision stating the "nonconforming use of part of a building or structure shall not be expanded or extended". Given the legally nonconforming height and operation of the existing tower, the proposed work therefore triggers a need for a Special Use Permit, as the intended work expands upon the existing nonconforming use.

PLAN COMMISSION ACTION:

The Plan Commission is asked to consider the petitioner's request for a Special Use Permit to allow an addition of DISH Wireless 5G capable antennas to the existing cellular tower and the addition of support equipment at the base of the monopole in a licensed area.

The Plan Commission may make a recommendation to the Village Board for approval, approval with conditions, or denial of the request. The Village consulted with Attorney Adam B. Simon, of Ancel Glink, regarding the certain factors the Plan Commission may consider in reviewing the current Special Use Permit proposal (please see Ancel Glink's Memorandum attached). Accordingly, the Plan Commission is legally directed to base its decision on the evidence limited to facts that tend to either support or undermine satisfaction of the criteria for granting approval of a Special Use Permit as set forth in Section 10-10-14 of the Glen Ellyn Zoning Code. Some permissible bases for decisions include height, setbacks, structural aspects, property value concerns, and community character. So long as the petitioner verifies that the FCC regulations for limiting RF emissions will be met, the Plan Commission is not authorized to further inquire about the general impact from radio frequency (RF) emissions or place further conditions on its Zoning decision. Additional review and commentary related to the proposed antenna and associated equipment was provided prior to the April meeting by Stuart Chapman, President of Municipal Services Associates, Inc. Mr. Chapman's firm specializes in the evaluation of telecommunications matters impacting municipalities. Mr. Chapman also attended the Plan Commission meeting and concurred with the findings of the Village Attorney and Village counsel.

Staff has prepared draft findings of fact for a recommendation of approval of the Special Use (attached). Plan Commissioners should feel free to modify the findings based upon information provided at the public hearing. If Commission members wish to recommend denial of the request and would like staff to prepare a motion to deny, please contact staff in advance of the meeting. A draft motion to approve has been attached for the Plan Commission's review and use.

cc: Tony Phillips, Fullerton Engineering Consultants
Ariel Stouder, Fullerton Engineering Consultants

x:\plandev\planning\development projects\hill\hill 1102, cell tower, sup\meetings\pc ii 4-27-23\pc staff report 1102 hill sup presentation-5-25-23.doc

111 East Wacker Drive, Suite 2600
Chicago, IL 60601-4208
Tel: 312.527.4000 | Fax: 312.527.4011
taftlaw.com

Karl D. Camillucci
312.836.4085
kcamillucci@taftlaw.com

May 15, 2023

VIA E-MAIL

Plan Commission
Village of Glen Ellyn
535 Duane Street
Glen Ellyn, IL 60137

Re: Eligible Facilities Requests under Section 6409(a) of the United States Spectrum Act: 1102 Hill Avenue and 415 Taft Avenue.

Dear Members of the Plan Commission:

Our firm represents Crown Castle USA Inc. (the "**Company**") in connection with the above-referenced eligible facilities requests to modify existing towers (collectively, the "**Requests**") submitted to the Village of Glen Ellyn (the "**Village**") by the Company pursuant to Section 6409(a) of the United States Middle Class Tax Relief and Job Creation Act of 2012[1] and its regulations (collectively, the "**Spectrum Act**"). The Village's Plan Commission (the "**Commission**") held public hearings about the Requests on April 27, 2023. At that meeting, the Commission requested additional analysis regarding the Village's legal authority to review the Requests. Specifically, the Commission asked:

1. Does the Spectrum Act require approval of the Requests?; and

2. May the Village consider property values in connection with its action on the Requests?

Under the facts presented by the Requests, the short answers are:

1. Yes, the Spectrum Act requires approval of the Requests; and

2. No, the Village may not consider property values in connection with its action on the Requests.

[1] Codified as 47 U.S.C. § 1455(a).

As requested by the Commission, this letter further discusses the Village's legal authority to act upon the Requests. Although the Spectrum Act limits the formal scope of the Village's review and requires approval of the Requests under the applicable facts, the Company believes strongly in working cooperatively with the Village to address the Village's comments and questions. Indeed, the Company first filed an application with the Village with respect to1102 Hill Avenue more than one year ago, in April of 2022. Since that time, the Company has worked in good faith with Village staff to provide requested information and respond to the Village's comments and questions, notwithstanding that the Spectrum Act provides for a 60-day "shot clock" for action on eligible facilities requests. The Company appreciates the dialogue it has had with the Village and looks forward to continuing its collaborative and constructive relationship with the Village.

1. Section 6409(a)(1) of the Spectrum Act Requires Approval of the Requests.

a. The Spectrum Act Preempts the Village's Authority.

The Spectrum Act states that the Village "may not deny, and shall approve any eligible facilities request for a modification of an existing wireless tower . . . that does not substantially change the physical dimensions of such tower." [2] The Federal Communications Commission (the "**FCC**") has determined that the provisions of the Spectrum Act "preempt [state and local authorities] from choosing to exercise [their] authority [to review wireless facilities siting applications] under their laws other than in accordance with Federal law – *i.e.*, to deny any covered requests." *In re: Acceleration of Broadband Deployment by Improving Wireless Facilities Siting Policies*, 80 FR 1238-01 at 1256, ¶ 106 (2015). Federal courts agree: "[t]he [Spectrum] Act preempts local regulation of collocations and bars states from denying facility modification applications that meet certain standards." *Montgomery County, Md. v. F.C.C.*, 811 F.3rd 121, 128-129, January 8, 2015.

b. The Village Must Approve the Requests Because They Satisfy the Requirements of the Spectrum Act.

The Village must approve the Requests because the proposed modifications would satisfy the requirements of the Spectrum Act. The Spectrum Act requires approval of an eligible facilities request that satisfies all of the following standards (collectively, the "**Spectrum Act Standards**"):

[2] Section 1.b. of this letter discusses how the Spectrum Act defines modifications that would not substantially change the physical dimensions of an existing tower and, therefore, may not be denied and must be approved.

i. The request proposes to install transmission equipment on an existing tower (*see,* 47 C.F.R. §§ 1.6100(b)(2) – 1.6100(b)(4)); and

ii. The installation would not "substantially change" the physical dimensions of the existing tower (47 C.F.R. §§ 1.6100(b)(3)). An installation does not substantially change the physical dimensions of the existing tower if it:

A. Would not increase the height of the tower by the greater of either 10% of the tower height or the height of an additional antenna array plus up to 20 feet of separation from the closest existing antenna array;

B. Would not add an appurtenance to the tower that protrudes from the edge of the tower by the greater of either more than 20 feet or the width of the tower structure at the level of the appurtenance;

C. Would not result in the installation of more than the standard number of equipment cabinets, not to exceed four cabinets;

D. Would not result in excavation outside of the site boundaries by more than 30 feet in any direction;

E. Would not defeat any concealment element of the tower; or

F. Would comply with conditions of the siting approval for the construction of the tower (provided, however, that noncompliance with such conditions does *not* cause a substantial change to the existing tower if the request would be non-compliant in a manner that does not exceed the height, width, cabinet, and excavation thresholds described in (i) through (iv) above).

47 C.F.R. § 1.6100(b)(7).

The engineering plans, narrative descriptions of the proposed modifications, and Spectrum Act checklists, and other materials submitted to the Village by the Company show that the Requests satisfy all of the Spectrum Act Standards. The Village's consultant concurs that the Requests satisfy all of the Spectrum Act Standards, and no party has suggested otherwise. Under the Spectrum Act, therefore, the Village may not deny and must approve the Requests.

c. The Requests Are Eligible Facilities Requests Submitted Pursuant to the Spectrum Act, Not Special Use Permit Applications Submitted Pursuant to the Village's Zoning Ordinance.

The Requests are "eligible facilities requests" made pursuant to the Spectrum Act, not special use permit applications filed pursuant to the Village's zoning ordinance. The FCC has determined that municipalities may require parties who make an eligible facilities request under the Spectrum Act to file an application for the purpose of determining whether the request satisfies the Spectrum Act Standards. *In re: Acceleration of Broadband Deployment*, 80 FR 1238-01 at 1256, ¶ 103. Nevertheless, many municipalities have not adopted application procedures specifically designed to approve eligible facilities requests made pursuant to the Spectrum Act. *In the Matter of Implementation of State and Local Governments' Obligation to Approve Certain Wireless Facility Modification Requests Under Section 6409(A) of the Spectrum Act of 2012*, 35 FCC Rcd. 5977, 5985 ¶ 15 (F.C.C.), June 9, 2020. In those cases, the FCC acknowledges that municipalities may use "authorizations under the local government's standard zoning or siting rules" to approve eligible facilities requests. *Id.* at 5988, ¶ 21. The Village has not developed a specific application form or application process designed for the review and approval of eligible facilities requests under the Spectrum Act. Notwithstanding that the Village has reviewed the Requests using its process for reviewing special use permits, the Requests remain eligible facilities requests under the Spectrum Act.

As such, the scope of the Village's review is confined solely to the requirements of the Spectrum Act. In particular, and as further discussed below, the Village must: (i) limit the substantive scope of its review to determining whether the proposed modifications set forth in the Requests satisfy the Spectrum Act Standards; and (ii) comply with the Spectrum Act's 60-day "shot clock" for granting eligible facilities requests, after the expiration of which a request that satisfies the Spectrum Act Standards is "deemed granted" under the Spectrum Act. *See Id*.; *In re: Acceleration of Broadband Deployment*, 80 FR 1238-01 at 1256-1257, ¶¶ 103-114.

d. The Village Must Consider Only Whether the Requests Satisfy the Spectrum Act Standards.

Whatever approval process the Village uses, "State and local governments may only require applicants to provide documentation that is reasonably related to determining whether the request meets the requirements of [6409(a)]" (*i.e.* whether a proposed modification would satisfy the Spectrum Act Standards). *In re: Acceleration of Broadband Deployment*, 80 FR 1238-01 at 1256, ¶ 107 (underlining added). The Village may not require information unrelated to whether the proposed modification would satisfy the

Spectrum Act Standards, including "documentation proving the need for the proposed modification or presenting the business case for it." *Id.*

The Company has already submitted to the Village sufficient information for the Village to determine that the Requests satisfy the Spectrum Act Standards (*see, e.g.*, cover letters from the Company, engineering plans, and checklists showing that the Requests satisfy the Spectrum Act Standards). Requests for other information, including, without limitation, information related to property values and radiofrequency emissions, are not reasonably related to determining whether the Requests would substantially change the physical dimensions of the existing towers. The Spectrum Act prohibits the Village from seeking such information from the Company in connection with the Requests.

e. The Requests Are Subject to the Spectrum Act's "Shot Clock."

The Village's review of the Requests is subject to the 60-day "shot clock" for the approval of eligible facilities requests under the Spectrum Act. If a request that satisfies the Substantial Change Standards "has not been approved by a State or local government within 60 days from the date of filing . . . the reviewing authority will have violated section 6409(a)'s mandate to approve and not deny the request, and the request will be deemed granted." *Id.* at 1257, ¶ 110. The "shot clock" may be tolled by mutual agreement or if a municipality sends a written notice within thirty (30) days after submission of the request that the initial request was incomplete, but the "municipality may only specify as missing information and supporting documents that are reasonably related to determining whether the request meets the requirements of section 6409(a)." *Id.* A municipality "may not delay the start of the shot clock by requiring an applicant to submit documentation that is not reasonably related to determining whether the proposed modification is an eligible facilities request." *In the Matter of Implementation of State and Local Governments' Obligation to Approve Certain Wireless Facility Modification Requests*, 35 FCC Rcd. at 5988, ¶ 20. In addition, if a municipality uses a special use permit or other standard zoning or siting approval in connection with consideration of an eligible facilities request under the Spectrum Act, the "requirements to obtain such authorizations may not be used by the local government to delay the start of or to toll the shot clock under the Section 6409(a) process." *Id.* at 5988, ¶ 21.

The Village deemed the Company's Request with respect to 1102 Hill Avenue complete on November 2, 2022. The 60-day "shot clock" applicable to that Request expired no later than January 1, 2023. The Company's Request with respect to 415 Taft was filed on February 13, 2023 and the fees were paid March 15, 2023. The 60-day "shot clock" applicable to that Request will expire, at the latest, on May 15, 2023.[3]

[3] Under the Spectrum Act, after the expiration of the applicable "shot clocks" the Company has the right to send notice to the Village that the Requests are "deemed granted."

2. The Village May Not Consider Property Values.

Certain members of the Commission asked whether, in connection with their review of the Requests, they have the legal authority to consider the possibility that public perception of radio frequency emissions from wireless telecommunication facilities could depress property values in the Village. The Spectrum Act and the Telecommunications Act of 1996 (the "**Telecommunications Act**") both prohibit the Village from considering the effect of radio frequency emissions on property values as part of the Village's review of the Requests.

a. The Spectrum Act Prohibits Consideration of Property Values and Radio Frequency Emissions.

The Spectrum Act prohibits the Village from considering property values and radio frequency emissions in connection with its review of the Requests. As discussed in Section 1.d. of this letter, under the Spectrum Act the Village must only consider information reasonably related to whether the Requests satisfy the Spectrum Act Standards. The effect, if any, of the Requests on property values is not reasonably related to whether the Requests satisfy the Spectrum Act Standards. Similarly, matters related to radio frequency emissions are not reasonably related to whether the Requests satisfy the Spectrum Act Standards. Under the Spectrum Act, therefore, the Village may not consider property values or radio frequency emissions in connection with its review of the Requests.

b. The Telecommunications Act Prohibits Consideration of Radio Frequency Emissions.

Further, the Telecommunications Act prohibits the Village from denying the Requests on the basis of issues related to radio frequency emissions. The Telecommunications Act states, among other things, that the "regulation of the placement, construction, and modification of personal wireless services facilities" by units of local government may not be done "on the basis of the environmental effects of radio frequency emissions to the extent that such facilities comply with [FCC] regulations concerning such emissions." 47 U.S.C. § 332(c)(7)(B). The Company has submitted documentation to the Village demonstrating that the facilities will comply with FCC regulations concerning radio frequency emissions. To the extent that the Commission's concerns regarding property values are based on concerns regarding radio frequency emissions, the Telecommunications Act prohibits the consideration of radio frequency emissions and, therefore, property values.

3. Even if the Village Had Legal Authority to Consider Property Values, the Requests Would Not Materially Affect Property Values.

For the reasons set forth in Section 2 of this letter, the Village lacks legal authority to consider property values in its review of the Requests. For the sake of argument, however, even if the Village had legal authority to consider the effect of the Requests on property values, the record supports finding that the Requests would not have a material effect on property values in the Village.

The record includes sworn testimony to the effect that many factors contribute to the value of real property, and the effect of any single factor cannot be determined with a high degree of certainty. Macroeconomic factors such as interest rates, inflation, and the strength of the overall economy can cause property values to rise or fall, irrespective of local factors. At the same time, many location-specific factors may play a role in each property's value, such as the property's location, size, use, appearance, improvements, condition, and cash flow. Isolating the influence of any particular factor on a property's overall value is infeasible.

Nevertheless, the record supports finding that the modifications described in the Requests will not materially affect property values in the Village because the presence of the existing towers on 1102 Hill Avenue and 415 Taft Avenue is already "priced in" to property values. Both properties are improved with existing towers. Both towers historically have been improved with antennas and related wireless facilities. 415 Taft Avenue currently is improved with antennas and related wireless facilities. Other existing towers and wireless facilities are located near 1102 Hill Avenue. Towers and antennas are already part of the built environment and aesthetic landscape in the areas surrounding the properties. Modifying the existing towers to include additional antennas will not change the improvements, use, appearance, or condition of the properties in a manner that would have a discernible impact on property values.

Moreover, the record shows that both properties are located in areas where wireless towers and facilities are consistent with the uses, improvements, and appearance of surrounding properties. 1102 Hill Avenue is surrounded by railroad right-of-way, industrial buildings, warehousing and distribution facilities, and other existing wireless and radio towers. 415 Taft Avenue is improved with a sign fabrication business and is located adjacent to vacant lots, a golf course, and a commercial corridor consisting primarily of fast-casual restaurants, commercial office buildings, and similar uses. Neither area has features of significant historical or aesthetic significance. The presence of wireless towers and antennas in those areas will not interfere with the development, use, and enjoyment of the surrounding properties, materially alter the appearance of the area, or otherwise affect the value of nearby properties.

Although the record includes speculative testimony about property values from a small but vocal group of lay people who oppose the Requests, that testimony does not support finding that the Requests, if granted, would reduce property values in the Village. Those witnesses are not qualified to testify about property values. Their testimony is based on unverifiable anecdotes and unfounded beliefs regarding radio frequency emissions that the Village lacks legal authority to consider and is outweighed by other evidence in the record, discussed above.

In addition, their testimony is contradicted by comments made by members of the Commission. Commissioner Dawson disagreed that approval of the Requests could depress property values within the Village, stating that actions to enhance wireless networks, such as approval of the Requests, are critical to making the Village a desirable place to live and work and could improve property values. Any action that might reduce the quality of wireless service in the Village, such as denial of the Requests, could lower demand for properties in the Village and reduce property values. Similarly, Chair Loftus stated that wireless telecommunication facilities are essential infrastructure, similar to streets, sewers, and utilities. The absence or obsolescence of such infrastructure could limit residents' ability to use products and services that rely on wireless technology.

Although the Commission does not have legal authority to consider the effect of the Requests on property values, the record shows that approval of the Requests would not have a material effect on property values in the Village. To be sure, the record does not support finding that the Requests, if granted, would materially reduce property values in the Village. If anything, to many people the presence of high-quality wireless infrastructure in the Village may enhance the desirability of the Village as a place to live and work and improve property values.

4. The Telecommunications Act of 1996 Prohibits Discrimination Against Providers of Substantially Equivalent Services.

Another provision of the Telecommunications Act is also relevant to the Village's legal authority with respect to the Requests. The Telecommunications Act states that “regulation of the placement, construction, and modification of personal wireless services facilities” by municipalities may not "unreasonably discriminate among providers of functionally equivalent services.” *Id.* Wireless carriers other than Dish currently provide wireless telecommunication services, including 5G services, within the Village. The proposed modifications to the existing towers at 1102 Hill Avenue and 415 Taft Avenue would provide substantially equivalent services to other carriers' facilities already in existence within the Village. Disapproval of the Requests would, therefore, unreasonably discriminate against Dish in favor of existing wireless carriers operating in the Village, in violation of the Telecommunications Act.

We hope that the analysis and information in this letter is helpful to the Commission in its review of the Requests. The Company looks forward to concluding the Village's review and receiving a recommendation of approval of the Requests at the next meeting of the Commission on May 25, 2023.

Sincerely,

Taft Stettinius & Hollister LLP

Karl D. Camillucci

KDC

111 East Wacker, Suite 2800
Chicago, IL 60601
Tel: 312.527.4000 | Fax: 312.527.4011
taftlaw.com

Karl D. Camillucci
312.836.4085
kcamillucci@taftlaw.com

April 24, 2023

BY EMAIL

Mr. Greg Mathews
Village Attorney
Village of Glen Ellyn, Illinois
535 Duane Street
Glen Ellyn, IL 60137
gmathews@glenellyn.org

Re: Eligible Facilities Requests under Section 6409(a) of the United States Spectrum Act: (1) Agenda Item ID#: 2023-258, 1102 Hill Avenue, Glen Ellyn, Illinois; and (2) Agenda Item ID#: TBD, 415 Taft Avenue, Glen Ellyn Illinois.

Dear Mr. Mathews:

As you know, our firm represents Crown Castle USA Inc. (the "**Company**") in connection with the above-referenced matters. Pursuant to Section 6409(a) of the United States Middle Class Tax Relief and Job Creation Act of 2012 (also known as the Spectrum Act)[1] and the rules and orders of the Federal Communications Commission adopted thereunder (collectively, the "**Spectrum Act**"), the Company applied to the Village of Glen Ellyn (the "**Village**") for approval of the installation of new telecommunication facilities (the "**Collocations**") on existing wireless telecommunication support towers (the "**Towers**") located on the properties commonly known as: (1) 1102 Hill Avenue in Glen Ellyn, Illinois (the "**Hill Property**"); and (2) 415 Taft Avenue in Glen Ellyn, Illinois (the "**Taft Property**" and, together with the Hill Property, the "**Properties**"). The Company and affiliated entities own the Towers and intend to lease space on the Towers to Dish Wireless, L.L.C. ("**Dish**"), which will own and operate the Collocations.

These matters involve the application of the Spectrum Act and other federal law with which members of the Village's Plan Commission and Board of Trustees may not have much experience. Further, we understand that members of the public may have provided the Village with inaccurate

[1] Codified as 47 U.S.C. § 1455(a).

information about the proposed Collocations and their potential effects on the community. In advance of the public hearing scheduled for April 27, 2023[2] and to assist the Plan Commission and the Board of Trustees with their review, we write to offer background about: (1) the Spectrum Act; (2) the United States Telecommunications Act of 1996 (the "**Telecommunications Act**"); and (3) inaccurate claims by certain members of the public about the effects of radio frequency emissions. Please share this letter and the attached materials with the Plan Commission and the Board of Trustees and let me know if you would like to discuss them. The Company respectfully requests that this letter be made a part of the public hearing record.

1. <u>The Spectrum Act</u>.

Congress adopted the Spectrum Act to facilitate the collocation of multiple wireless facilities on existing towers, thereby reducing the proliferation of new towers while advancing the United States' national interest in the efficient development of wireless communication networks. Pursuant to the Spectrum Act, a municipality "may not deny, and shall approve any eligible facilities request for a modification of an existing wireless tower or base station that does not substantially change the physical dimensions of such tower or base station" (any such request, a "**Qualified Request**"). 47 U.S.C. § 1455(a)(1). A municipality must approve a Qualified Request within 60 days after the date that an applicant submits a request seeking approval (the "**Approval Period**"). 47 C.F.R. § 1.6100(c)(2). The term "eligible facilities request" includes "any request for modification of an existing wireless tower" involving "collocation of new transmission equipment," such as the Collocation. 47 U.S.C. § 1455(a)(2)(A).

For towers not located in a public right-of-way (such as the Towers), an eligible facilities request is a Qualified Request if the proposed modification:

(a) Would not increase the height of the tower by the greater of either 10% of the tower height or the height of an additional antenna array plus up to 20 feet of separation from the closest existing antenna array;

(b) Would not add an appurtenance to the tower that protrudes from the edge of the tower by the greater of either more than 20 feet or the width of the tower structure at the level of the appurtenance;

(c) Would not result in the installation of more than the standard number of equipment cabinets, not to exceed four cabinets;

(d) Would not result in excavation outside of the site boundaries by more than 30 feet in any direction;

[2] The Plan Commission held a public hearing on the Hill Property matter and recommended approval of the Company's application on December 8, 2022. The Board of Trustees referred the Hill Property matter back to the Plan Commission at its meeting on February 13, 2023. The Village duly noticed the Hill Property matter for a second public hearing before the Plan Commission scheduled for March 9, 2023, which was continued to April 27, 2023. We understand that the Village has noticed the Taft Property matter for a public hearing at the Plan Commission's meeting on April 27, 2023, as well.

(e) Would not defeat any concealment element of the tower; or

(f) Would comply with conditions of the siting approval for the construction of the tower (provided, however, that noncompliance with such conditions does *not* cause a substantial change to the existing tower if the request would be non-compliant in a manner that does not exceed the height, width, cabinet, and excavation thresholds described in (a) through (d) above).

47 C.F.R. § 1.6100(b)(7). The proposed Collocations both satisfy all of the standards set forth above and, therefore, are Qualified Requests under the Spectrum Act and must be approved.

The Federal Communications Commission (the "**FCC**") has provided guidance regarding the application of the Spectrum Act to municipal approval processes. According to the FCC, ideally municipalities would adopt approval processes for the specific purpose of considering requests under the Spectrum Act, but many municipalities have not. *In the Matter of Implementation of State and Local Governments' Obligation to Approve Certain Wireless Facility Modification Requests Under Section 6409(A) of the Spectrum Act of 2012*, 35 FCC Rcd. 5977, 5985 (F.C.C.), June 9, 2020. When that is the case, a jurisdiction may use an approval process designed for other purposes, such as a land use and zoning approval process. *Id.* at 5988-5989. The municipality must still comply, however, with the requirements of the Spectrum Act, including, without limitation, that any Qualified Request be approved within the Approval Period: "Requirements of such authorizations may not be used by the local government to delay the start of or to toll the shot clock under the Section 6409(a) process." *Id.*

No matter what approval process a municipality uses, the scope of municipal review is limited to whether a request is a Qualified Request. *In re: Acceleration of Broadband Deployment by Improving Wireless Facilities Siting Policies*, 80 FR 1238-01, 1256 (January 8, 2015); *Montgomery County, Md. v. F.C.C.*, 811 F.3rd 121, 130 (2015) ("The FCC has limited the local review process to the simple question of whether the proposed modification falls within the statutory parameters" (*i.e.*, whether a request is a Qualified Request)). The Approval Period begins after an applicant has: (a) taken the first procedural step that the municipality requires as part of its applicable regulatory review process under the Spectrum Act; and (b) submitted written documentation showing that the proposed modification is a Qualified Request. *In the Matter of Implementation of State and Local Governments' Obligation to Approve Certain Wireless Facility Modification Requests*, 35 FCC Rcd. at 5986.

A municipality "may require the applicant to provide documentation or information only to the extent reasonably related to determining whether the request meets the requirements of this section [*i.e.* whether the request is a Qualified Request]." 47 C.F.R. § 1.6100(c)(1). A municipality "may not require an applicant to submit any other documentation, including but not limited to documentation intended to illustrate the need for such wireless facilities or to justify the business decision to modify such wireless facilities." *Id.* A municipality may toll the Approval Period by providing written notice to the applicant within thirty (30) days after receipt of an application that specifically identifies missing information or documents that are required under

47 C.F.R. § 1.6100(c)(1) (*i.e.*, information or documents reasonably required to determine whether the request is a Qualified Request). 47 C.F.R. § 1.6100(c)(3)(i).

In the event that a municipality does not approve a Qualified Request within the Approval Period, the Qualified Request is "deemed granted" after the applicant notifies the municipality in writing that the Approval Period has expired and the application has been deemed granted. 47 C.F.R. § 1.6100(c)(4). In that case, an applicant may proceed with installing the proposed modification without further action by the municipality. In addition to this "deemed granted" remedy, applicants who make Qualified Requests may seek declaratory and injunctive relief in federal court to enforce their rights under the Spectrum Act. *In re: Acceleration of Broadband Deployment*, 80 FR 1238-01 at 1258-1259.

The FCC has specifically determined that the Spectrum Act preempts state and local authority to regulate the modification of wireless telecommunication towers and facilities. *Id.* at 1256 (The limitations of the Spectrum Act "preempt [state and local authorities] from choosing to exercise such authority under their laws other than in accordance with Federal law – *i.e.*, to deny any covered requests."). Federal courts agree. *See e.g. Montgomery County*, 811 F.3rd at 128-129 ("The Act preempts local regulation of collocations and bars states from denying facility modification applications that meet certain standards.").

The Company requested Village approval of the Collocations pursuant to the Spectrum Act and has provided all information reasonably necessary for the Village to determine that the Company's requests are Qualified Requests. The Village does not appear to have adopted a specific process for review of requests made pursuant to the Spectrum Act. The Company therefore filed its requests for approval of the Collocations pursuant to the Spectrum Act as special use permit applications. Cover letters submitted by the Company in connection with its requests clearly identified each submittal as an "eligible facilities request" under the Spectrum Act and described the requirements of the Spectrum Act. The Company also submitted checklists and construction plans demonstrating that the requests are Qualified Requests under the Spectrum Act.

The Village has all of the information that is reasonably necessary for the Village to determine that the Company's applications regarding the Hill Property and the Taft Property are Qualified Requests under the Spectrum Act. For that reason, the Company respectfully requests that the Village approve the Collocations pursuant to the requirements of the Spectrum Act.

2. <u>The Telecommunications Act</u>.

The Telecommunications Act of 1996 (the "**Telecommunications Act**") also limits the authority of municipalities to regulate telecommunications facilities. Among other things, pursuant to 47 U.S.C. § 332(c)(7)(B), the "regulation of the placement, construction, and modification of personal wireless services facilities" by units of local government may not: (a) "prohibit or have the effect of prohibiting the provision of personal wireless services;" (b) "unreasonably discriminate among providers of functionally equivalent services;" or (c), as may be particularly relevant here, be done "on the basis of the environmental effects of radio frequency

emissions to the extent that such facilities comply with [FCC] regulations concerning such emissions."

We understand that certain members of the public have urged the Village not to approve the Collocations on the basis of their concerns about the effects of radio frequency emissions. The Collocations will comply in every respect with applicable law and FCC regulations, including, without limitation, regulations concerning such emissions. Documentation demonstrating that the Collocations will comply with applicable FCC regulations is attached to this letter as **Exhibit A**. Disapproval of the Collocations on the basis of radio frequency emissions, therefore, would violate the Telecommunications Act.

3. <u>Inaccurate Claims by Certain Members of the Public</u>.

Although both Collocations satisfy the standards for approval under the Spectrum Act and may not be regulated on the basis of the effects of radio frequency emissions under the Telecommunications Act, the Company recognizes that a vocal minority of the public has provided the Village with sensational and inaccurate misinformation regarding the health effects of radio frequency emissions. The Company also recognizes that members of the Plan Commission and Board of Trustees may feel more comfortable about the Collocations if they have accurate information about radio frequency emissions. Without waiving any of the rights that the Company and Dish have under the Spectrum Act and the Telecommunications Act, therefore, the Company provides the materials attached to this letter as **Exhibit B** regarding radio frequency emissions as a resource for the Plan Commission and the Board of Trustees. The Company will not attempt to specifically refute every baseless claim about radiofrequency emissions made by opponents of the Collocation. The Company trusts, however, that the information in Exhibit B will be useful to the Plan Commission and the Board of Trustees, who will appreciate having valid and reliable information in the public hearing record.

Thank you for your attention to this matter. Please contact me if you would like to discuss.

Sincerely,

Taft Stettinius & Hollister LLP

Karl D. Camillucci

KDC

EXHIBIT A

DOCUMENTATION OF COMPLIANCE WITH FCC REGULATIONS

Nationwide Programmatic Agreement
Co-location Criteria Verification Form

Site Name: LOMBARD
Business Unit Number: 817173 App ID: 570902
Site Address: 21 W. 180 HILL AVENUE GLEN ELLYN, IL 60137
Carrier Name: DISH Wireless L.L.C.
Customer Site ID: CHCHI00652A

Tower was built on or before 3/16/01? YES ☑ NO ☐

Criteria for Programmatic Agreement Eligibility for Towers Built on or before March 16, 2001

YES ☐	NO ☑	The mounting of the antenna will result in a substantial increase in the size of the tower[1].
YES ☐	NO ☑	The tower has been found by the FCC to have an adverse or potentially adverse effect that has not been resolved through an MOA or other mechanism.
YES ☐	NO ☑	The tower is the subject of a pending environmental review or proceeding before the FCC involving compliance with Section 106 of the NHPA.
YES ☐	NO ☑	The tower owner has received written or electronic notice from the FCC that the FCC is in receipt of a complaint from a member of the public, a SHPO or the Council that the co-location has an adverse effect on one or more historic properties.

Criteria for Programmatic Agreement Eligibility for Towers Built after March 16, 2001

YES ☐	NO ☐	No Section 106 review (SHPO review) or any associated environmental (NEPA) review required by the FCC has been completed for this tower.
YES ☐	NO ☐	The mounting of the antenna will result in a substantial increase in the size of the tower.[1]
YES ☐	NO ☐	The tower is the subject of a pending environmental review or proceeding before the FCC involving compliance with Section 106 of the NHPA.
YES ☐	NO ☐	The tower owner has received written or electronic notice from the FCC that the FCC is in receipt of a complaint from a member of the public, a SHPO or the Council that the co-location has an adverse effect on one or more historic properties.

If any of the above answers are "YES," consultation with the SHPO is required prior to placement of the antenna on the tower.

Approved By: *Michelle Perry* 6/10/2021

A COPY OF THIS COMPLETED FORM MUST BE PROVIDED TO THE CARRIER AND TO THE CROWN CASTLE REGULATORY DEPARTMENT.

[1] Substantial increase in size of the tower" means: 1) an increase in the tower height of more than 10% or by the height of one antenna array with a separation distance from the nearest existing array not to exceed 20 feet, whichever is greater; 2) the installation of more than 4 new equipment cabinets or more than 1 new equipment building; 3) the addition of an appurtenance that would protrude from the edge of the tower more than 20 feet or more than the width of the tower at the level of the appurtenance, whichever is greater; or 4) the mounting of the antenna would involve excavation more than 30' in any direction outside the current boundaries of the site and any access or utility easements currently related to the site.

Nationwide Programmatic Agreement
Co-location Criteria Verification Form

Site Name: Chicago
Business Unit Number: 873681 App ID: 559909
Site Address: 415 Taft Ave GLEN ELLYN, IL 60137
Carrier Name: DISH Wireless L.L.C.
Customer Site ID: CHCHI00216A

Tower was built on or before 3/16/01? YES ☑ NO ☐

Criteria for Programmatic Agreement Eligibility for Towers Built on or before March 16, 2001

YES ☐	NO ☑	The mounting of the antenna will result in a substantial increase in the size of the tower[1].
YES ☐	NO ☑	The tower has been found by the FCC to have an adverse or potentially adverse effect that has not been resolved through an MOA or other mechanism.
YES ☐	NO ☑	The tower is the subject of a pending environmental review or proceeding before the FCC involving compliance with Section 106 of the NHPA.
YES ☐	NO ☑	The tower owner has received written or electronic notice from the FCC that the FCC is in receipt of a complaint from a member of the public, a SHPO or the Council that the co-location has an adverse effect on one or more historic properties.

Criteria for Programmatic Agreement Eligibility for Towers Built after March 16, 2001

YES ☐	NO ☐	No Section 106 review (SHPO review) or any associated environmental (NEPA) review required by the FCC has been completed for this tower.
YES ☐	NO ☐	The mounting of the antenna will result in a substantial increase in the size of the tower.[1]
YES ☐	NO ☐	The tower is the subject of a pending environmental review or proceeding before the FCC involving compliance with Section 106 of the NHPA.
YES ☐	NO ☐	The tower owner has received written or electronic notice from the FCC that the FCC is in receipt of a complaint from a member of the public, a SHPO or the Council that the co-location has an adverse effect on one or more historic properties.

If any of the above answers are "YES," consultation with the SHPO is required prior to placement of the antenna on the tower.

Approved By: *Lindsey Selsvold* 7/8/2021

A COPY OF THIS COMPLETED FORM MUST BE PROVIDED TO THE CARRIER AND TO THE CROWN CASTLE REGULATORY DEPARTMENT.

[1] Substantial increase in size of the tower" means: 1) an increase in the tower height of more than 10% or by the height of one antenna array with a separation distance from the nearest existing array not to exceed 20 feet, whichever is greater; 2) the installation of more than 4 new equipment cabinets or more than 1 new equipment building; 3) the addition of an appurtenance that would protrude from the edge of the tower more than 20 feet or more than the width of the tower at the level of the appurtenance, whichever is greater; or 4) the mounting of the antenna would involve excavation more than 30' in any direction outside the current boundaries of the site and any access or utility easements currently related to the site.

EXHIBIT B

INFORMATION ABOUT RADIO FREQUENCY EMISSIONS

Optional Checklist for Local Government To Determine Whether a Facility is Categorically Excluded

Purpose: The FCC has determined that many wireless facilities are unlikely to cause human exposures in excess of RF exposure guidelines. Operators of those facilities are exempt from routinely having to determine their compliance. These facilities are termed "categorically excluded." Section 1.1307(b)(1) of the Commission's rules defines those categorically excluded facilities. This checklist will assist state and local government agencies in identifying those wireless facilities that are categorically excluded, and thus are highly unlikely to cause exposure in excess of the FCC's guidelines. Provision of the information identified on this checklist may also assist FCC staff in evaluating any inquiry regarding a facility's compliance with the RF exposure guidelines.

BACKGROUND INFORMATION

1. Facility Operator's Legal Name: DISH Wireless L.L.C.
2. Facility Operator's Mailing Address: 5701 Santa Fe Drive, Littleton, CO 80120
3. Facility Operator's Contact Name/Title: Landlord Relations
4. Facility Operator's Office Telephone: 844-924-4186
5. Facility Operator's Fax: N/A
6. Facility Name: CHCHI00652A
7. Facility Address: 21 W 180 Hill Avenue
8. Facility City/Community: Glen Ellyn
9. Facility State and Zip Code: IL, 60137
10. Latitude: 41° 52' 59.17"
11. Longitude: -88° 2' 16.85"

continue →

Scanned with CamScanner

Optional Local Government Checklist (page 2)

EVALUATION OF CATEGORICAL EXCLUSION

12. Licensed Radio Service (see attached Table 1): Cellular Radiotelephone Service
13. Structure Type (free-standing or building/roof-mounted): Free Standing
14. Antenna Type [omnidirectional or directional (includes sectored)]: Directional (sectored)
15. Height above ground of the lowest point of the antenna (in meters): 18.9 meters
16. ☒ Check if all of the following are true:
    (a) This facility will be operated in the Multipoint Distribution Service, Paging and Radiotelephone Service, Cellular Radiotelephone Service, Narrowband or Broadband Personal Communications Service, Private Land Mobile Radio Services Paging Operations, Private Land Mobile Radio Service Specialized Mobile Radio, Local Multipoint Distribution Service, or service regulated under Part 74, Subpart I (see question 12).
    (b) This facility will not be mounted on a building (see question 13).
    (c) The lowest point of the antenna will be at least 10 meters above the ground (see question 15).

If box 16 is checked, this facility is categorically excluded and is unlikely to cause exposure in excess of the FCC's guidelines. The remainder of the checklist need not be completed. If box 16 is not checked, continue to question 17.

17. Enter the power threshold for categorical exclusion for this service from the attached Table 1 in watts ERP or EIRP* (note: EIRP = (1.64) X ERP): _____
18. Enter the total number of channels if this will be an omnidirectional antenna, or the maximum number of channels in any sector if this will be a sectored antenna:
19. Enter the ERP or EIRP per channel (using the same units as in question 17): _____
20. Multiply answer 18 by answer 19: _____
21. Is the answer to question 20 less than or equal to the value from question 17 (yes or no)?

If the answer to question 21 is YES, this facility is categorically excluded. It is unlikely to cause exposure in excess of the FCC's guidelines.

If the answer to question 21 is NO, this facility is not categorically excluded. Further investigation may be appropriate to verify whether the facility may cause exposure in excess of the FCC's guidelines.

*"ERP" means "effective radiated power" and "EIRP" means "effective isotropic radiated power

Scanned with CamScanner

Optional Checklist for Local Government To Determine Whether a Facility is Categorically Excluded

Purpose: The FCC has determined that many wireless facilities are unlikely to cause human exposures in excess of RF exposure guidelines. Operators of those facilities are exempt from routinely having to determine their compliance. These facilities are termed "categorically excluded." Section 1.1307(b)(1) of the Commission's rules defines those categorically excluded facilities. This checklist will assist state and local government agencies in identifying those wireless facilities that are categorically excluded, and thus are highly unlikely to cause exposure in excess of the FCC's guidelines. Provision of the information identified on this checklist may also assist FCC staff in evaluating any inquiry regarding a facility's compliance with the RF exposure guidelines.

BACKGROUND INFORMATION

1. Facility Operator's Legal Name: DISH Wireless L.L.C.
2. Facility Operator's Mailing Address: 5701 Santa Fe Drive, Littleton, CO 80120
3. Facility Operator's Contact Name/Title: Landlord Relations
4. Facility Operator's Office Telephone: 844-924-4186
5. Facility Operator's Fax: N/A
6. Facility Name: CHCHI00216A
7. Facility Address: 415 Taft Ave
8. Facility City/Community: Glen Ellyn
9. Facility State and Zip Code: IL, 60137
10. Latitude: 41° 51' 29.32"
11. Longitude: -88° 4' 18.23"

continue →

Scanned with CamScanner

Optional Local Government Checklist (page 2)

EVALUATION OF CATEGORICAL EXCLUSION

12. Licensed Radio Service (see attached Table 1): Cellular Radiotelephone Service
13. Structure Type (free-standing or building/roof-mounted): Free Standing
14. Antenna Type [omnidirectional or directional (includes sectored)]: Directional (sectored)
15. Height above ground of the lowest point of the antenna (in meters): 37.5 meters
16. ☒ Check if all of the following are true:
    (a) This facility will be operated in the Multipoint Distribution Service, Paging and Radiotelephone Service, Cellular Radiotelephone Service, Narrowband or Broadband Personal Communications Service, Private Land Mobile Radio Services Paging Operations, Private Land Mobile Radio Service Specialized Mobile Radio, Local Multipoint Distribution Service, or service regulated under Part 74, Subpart I (see question 12).
    (b) This facility will not be mounted on a building (see question 13).
    (c) The lowest point of the antenna will be at least 10 meters above the ground (see question 15).

If box 16 is checked, this facility is categorically excluded and is unlikely to cause exposure in excess of the FCC's guidelines. The remainder of the checklist need not be completed. If box 16 is not checked, continue to question 17.

17. Enter the power threshold for categorical exclusion for this service from the attached Table 1 in watts ERP or EIRP* (note: EIRP = (1.64) X ERP): _____
18. Enter the total number of channels if this will be an omnidirectional antenna, or the maximum number of channels in any sector if this will be a sectored antenna:
19. Enter the ERP or EIRP per channel (using the same units as in question 17): _____
20. Multiply answer 18 by answer 19: _____
21. Is the answer to question 20 less than or equal to the value from question 17 (yes or no)?

If the answer to question 21 is YES, this facility is categorically excluded. It is unlikely to cause exposure in excess of the FCC's guidelines.

If the answer to question 21 is NO, this facility is not categorically excluded. Further investigation may be appropriate to verify whether the facility may cause exposure in excess of the FCC's guidelines.

*"ERP" means "effective radiated power" and "EIRP" means "effective isotropic radiated power

Scanned with CamScanner

Federal
Communications
Commission

Local and State
Government
Advisory
Committee

A Local Government Official's Guide to Transmitting Antenna RF Emission Safety: Rules, Procedures, and Practical Guidance

June 2, 2000

Scanned with CamScanner

A Local Government Official's Guide to Transmitting Antenna RF Emission Safety: Rules, Procedures, and Practical Guidance

Over the past two years, the Federal Communications Commission (FCC) and its Local and State Government Advisory Committee (LSGAC) have been working together to prepare a voluntary guide to assist state and local governments in devising efficient procedures for ensuring that the antenna facilities located in their communities comply with the FCC's limits for human exposure to radiofrequency (RF) electromagnetic fields. The attached guide is the product of this joint effort.

We encourage state and local government officials to consult this guide when addressing issues of facilities siting within their communities. This guide contains basic information, in a form accessible to officials and citizens alike, that will alleviate misunderstandings in the complex area of RF emissions safety. This guide is not intended to replace OET Bulletin 65, which contains detailed technical information regarding RF issues, and should continue to be used and consulted for complex sites. The guide contains information, tables, and a model checklist to assist state and local officials in identifying sites that do not raise concerns regarding compliance with the Commission's RF exposure limits. In many cases, the model checklist offers a quick and effective way for state and local officials to establish that particular RF facilities are unlikely to exceed specific federal guidelines that protect the public from the environmental effects of RF emissions. Thus, we believe this guide will facilitate federal, state, and local governments working together to protect the public while bringing advanced and innovative communications services to consumers as rapidly as possible. We hope and expect that use of this guide will benefit state and local governments, service providers, and, most importantly, the American public.

We wish all of you good luck in your facilities siting endeavors.

William E. Kennard, Chairman
Federal Communications Commission

Kenneth S. Fellman, Chair
Local and State Government
Advisory Committee

Scanned with CamScanner

A LOCAL GOVERNMENT OFFICIAL'S GUIDE TO TRANSMITTING ANTENNA RF EMISSION SAFETY: RULES, PROCEDURES, AND PRACTICAL GUIDANCE

A common question raised in discussions about the siting of wireless telecommunications and broadcast antennas is, "Will this tower create any health concerns for our citizens?" We have designed this guide to provide you with information and guidance in devising efficient procedures for assuring that the antenna facilities located in your community comply with the Federal Communication Commission's (FCC's) limits for human exposure to radiofrequency (RF) electromagnetic fields.[1]

We have included a checklist and tables to help you quickly identify siting applications that do not raise RF exposure concerns. Appendix A to this guide contains a checklist that you may use to identify "categorically excluded" facilities that are unlikely to cause RF exposures in excess of the FCC's guidelines. Appendix B contains tables and figures that set forth, for some of the most common types of facilities, "worst case" distances beyond which there is no realistic possibility that exposure could exceed the FCC's guidelines.

As discussed below, FCC rules require transmitting facilities to comply with RF exposure guidelines. The limits established in the guidelines are designed to protect the public health with a very large margin of safety. These limits have been endorsed by federal health and safety agencies such as the Environmental Protection Agency and the Food and Drug Administration. The FCC's rules have been upheld by a Federal Court of Appeals.[2] As discussed below, most facilities create maximum exposures that are only a small fraction of the limits. Moreover, the limits themselves are many times below levels that are generally accepted as having the potential to cause adverse health effects. Nonetheless, it is recognized that any instance of noncompliance with the guidelines is potentially very serious, and the FCC has therefore implemented procedures to enforce compliance with its rules. At the same time, state and local governments may wish to verify compliance with the FCC's exposure limits in order to protect their own citizens. As a state or local government official, you can play an important role in ensuring that innovative and beneficial communications services are provided in a manner that is consistent with public health and safety.

This document addresses only the issue of compliance with RF exposure limits established by the FCC. It does not address other issues such as construction, siting, permits, inspection, zoning, environmental review, and placement of antenna facilities within communities. Such issues fall generally under the jurisdiction of states and local governments, within the limits imposed for personal wireless service facilities by Section 332(c)(7) of the Communications Act.[3]

---

[1] This guide is intended to complement, but not to replace, the FCC's OET Bulletin 65, "Evaluating Compliance with FCC Guidelines for Human Exposure to Radiofrequency Electromagnetic Fields," August 1997. Bulletin 65 can be obtained from the FCC's Office of Engineering and Technology (phone: 202-418-2464 or e-mail: rfsafety@fcc.gov). Bulletin 65 can also be accessed and downloaded from the FCC's "RF Safety" website: http://www.fcc.gov/oet/rfsafety.

[2] See *Cellular Phone Taskforce v. FCC*, 205 F.3d 82 (2d Cir. 2000).

Scanned with CamScanner

This document is not intended to provide legal guidance regarding the scope of state or local government authority under Section 332(c)(7) or any other provision of law. Section 332(c)(7)[4] generally preserves state and local authority over decisions regarding the placement, construction, and modification of personal wireless service facilities,[5] subject to specific limitations set forth in Section 332(c)(7). Among other things, Section 332(c)(7) provides that "[n]o State or local government or instrumentality thereof may regulate the placement, construction, and modification of personal wireless service facilities on the basis of the environmental effects of radio frequency emissions to the extent that such facilities comply with the [FCC's] regulations concerning such emissions." The full text of Section 332(c)(7) is set forth in Appendix C.

State and local governments and the FCC may differ regarding the extent of state and local legal authority under Section 332(c)(7) and other provisions of law. To the extent questions arise regarding such authority, they are being addressed by the courts. Rather than address these legal questions, this document recognizes that, as a practical matter, state and local governments have a role to play in ensuring compliance with the FCC's limits, and it provides guidance to assist you in effectively fulfilling that role. The twin goals of this document are: (1) to define and promote locally-adaptable procedures that will provide you, as a local official concerned about transmitting antenna emissions, with adequate assurance of compliance, while (2), at the same time, avoiding the imposition of unnecessary burdens on either the local government process or the FCC's licensees.

First, we'll start with a summary of the FCC's RF exposure guidelines and some background information that you'll find helpful. Next, we'll review the FCC's procedures for verifying compliance with the guidelines and enforcing its rules. Finally, we'll offer you some practical guidance to help you determine if personal wireless service facilities may raise compliance concerns. Note, however, that this guide is only intended to help you distinguish sites that are unlikely to raise compliance concerns from those that may raise compliance concerns, not to identify sites that are out of compliance. Detailed technical information necessary to determine compliance for individual sites is contained in the FCC's OET Bulletin 65 (see footnote 1, above).

---

[3] 47 U.S.C. § 332(c)(7). Under limited circumstances, the FCC also plays a role in the siting of wireless facilities. Specifically, the FCC reviews applications for facilities that fall within certain environmental categories under the National Environmental Policy Act of 1969 (NEPA), *see* 47 C.F.R. § 1.1307(a). Antenna structures that are over 200 feet in height or located near airport runways must be marked or lighted as specified by the Federal Aviation Administration and must be registered with the FCC, *see* 47 C.F.R. Part 17.

[4] Section 332(c)(7) of the Communications Act is identical to Section 704(a) of the Telecommunications Act of 1996.

[5] "Personal wireless services" generally includes wireless telecommunications services that are interconnected with the public telephone network and are offered commercially to the public. Examples include cellular and similar services (such as Personal Communications Service or "PCS"), paging and similar services, certain dispatch services, and services that use wireless technology to provide telephone service to a fixed location such as a home or office.

Scanned with CamScanner

Before we start, however, let's take a short tour of the radiofrequency spectrum. RF signals may be transmitted over a wide range of frequencies. The frequency of an RF signal is expressed in terms of cycles per second or "Hertz," abbreviated "Hz." One kilohertz (kHz) equals one thousand Hz, one megahertz (MHz) equals one million Hz, and one gigahertz (GHz) equals one billion Hz. In the figure below, you'll see that AM radio signals are at the lower end of the RF spectrum, while other radio services, such as analog and digital TV (DTV), cellular and PCS telephony, and point-to-point microwave services are much higher in frequency.

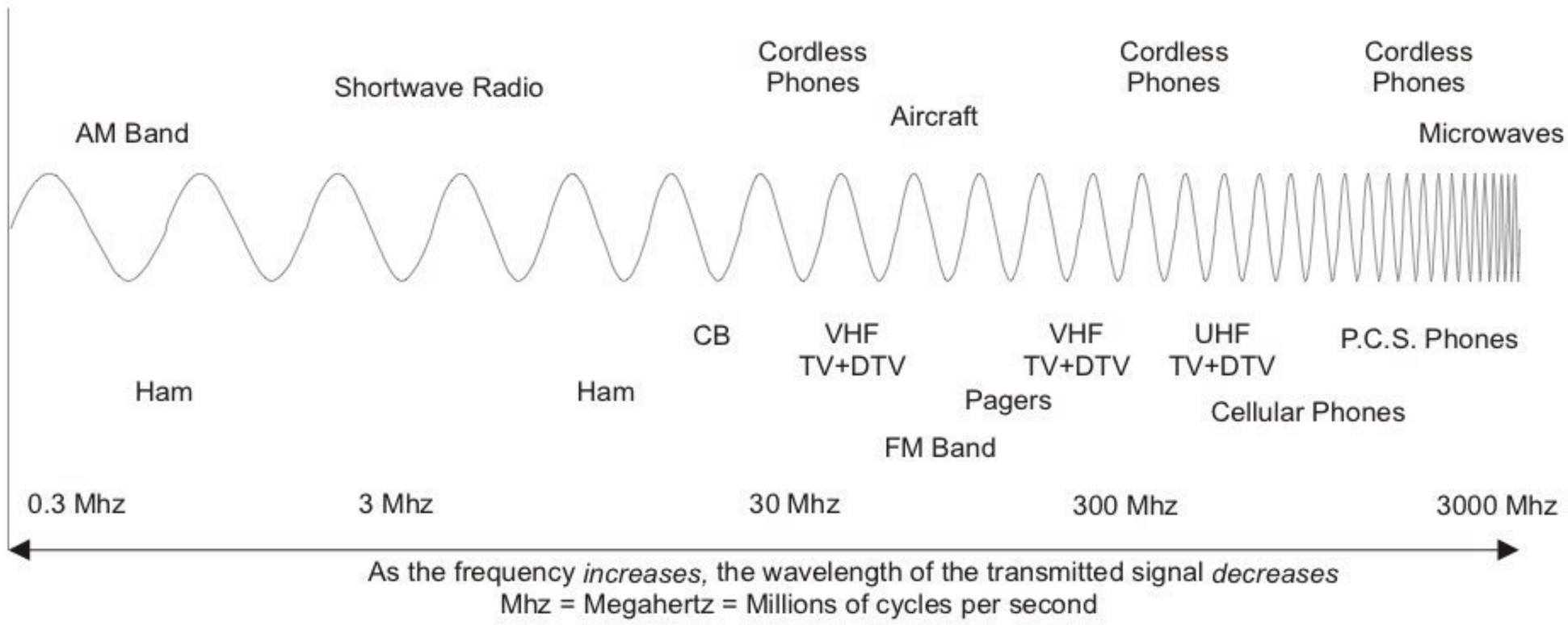

Illustration 1

The FCC's limits for maximum permissible exposure (MPE) to RF emissions depend on the frequency or frequencies that a person is exposed to. Different frequencies may have different MPE levels. Later in this document we'll show you how this relationship of frequency to MPE limit works.

I. The FCC's RF Exposure Guidelines and Rules.

Part 1 of the FCC's Rules and Regulations contains provisions implementing the National Environmental Policy Act of 1969 (NEPA). NEPA requires all federal agencies to evaluate the potential environmental significance of an agency action. Exposure to RF energy has been identified by the FCC as a potential environmental factor that must be considered before a facility, operation or transmitter can be authorized or licensed. The FCC's requirements dealing with RF exposure can be found in Part 1 of its rules at 47 C.F.R. § 1.1307(b). The exposure limits themselves are specified in 47 C.F.R. § 1.1310 in terms of frequency, field strength, power density and averaging time. Facilities and transmitters licensed and authorized by the FCC must either comply with these guidelines or else an applicant must file an Environmental Assessment (EA) with the FCC as specified in 47 C.F.R. § 1.1301 *et seq*. An EA is an official document required by the FCC's rules whenever an action may have a significant environmental impact (see discussion below). In practice, however, a potential environmental RF exposure problem is typically resolved before an EA would become necessary. Therefore, compliance with the FCC's RF guidelines constitutes a *de facto* threshold for obtaining FCC approval to construct or operate a station or transmitter. The FCC guidelines are based on exposure criteria

Scanned with CamScanner

recommended in 1986 by the National Council on Radiation Protection and Measurements (NCRP) and on the 1991 standard developed by the Institute of Electrical and Electronics Engineers (IEEE) and later adopted as a standard by the American National Standards Institute (ANSI/IEEE C95.1-1992).

The FCC's guidelines establish separate MPE limits for "general population/uncontrolled exposure" and for "occupational/controlled exposure." The general population/uncontrolled limits set the maximum exposure to which most people may be subjected. People in this group include the general public not associated with the installation and maintenance of the transmitting equipment. Higher exposure limits are permitted under the "occupational/controlled exposure" category, but only for persons who are exposed as a consequence of their employment (*e.g.*, wireless radio engineers, technicians). To qualify for the occupational/controlled exposure category, exposed persons must be made fully aware of the potential for exposure (*e.g.*, through training), and they must be able to exercise control over their exposure. In addition, people passing through a location, who are made aware of the potential for exposure, may be exposed under the occupational/controlled criteria. The MPE limits adopted by the FCC for occupational/controlled and general population/uncontrolled exposure incorporate a substantial margin of safety and have been established to be well below levels generally accepted as having the potential to cause adverse health effects.

Determining whether a potential health hazard could exist with respect to a given transmitting antenna is not always a simple matter. Several important factors must be considered in making that determination. They include the following: (1) What is the frequency of the RF signal being transmitted? (2) What is the operating power of the transmitting station and what is the actual power radiated from the antenna? [6] (3) How long will someone be exposed to the RF signal at a given distance from the antenna? (4) What other antennas are located in the area, and what is the exposure from those antennas? We'll explore each of these issues in greater detail below.

For all frequency ranges at which FCC licensees operate, Section 1.1310 of the FCC's rules establishes maximum permissible exposure (MPE) limits to which people may be exposed. The MPE limits vary by frequency because of the different absorptive properties of the human body at different frequencies when exposed to whole-body RF fields. Section 1.1310 establishes MPE limits in terms of "electric field strength," "magnetic field strength," and "far-field equivalent power density" (power density). For most frequencies used by the wireless services, the most relevant measurement is power density. The MPE limits for power density are given in terms of "milliwatts per square centimeter" or mW/cm^2. One milliwatt equals one thousandth of one watt (1/1000 of a watt).[7] In terms of power density, for a given frequency the FCC MPE limits can be interpreted as specifying the maximum rate that energy can be transferred (*i.e.*, the power) to a square centimeter of a person's body over a period of time (either 6 or 30 minutes, as explained

---

[6] Power travels from a transmitter through cable or other connecting device to the radiating antenna. "Operating power of the transmitting station" refers to the power that is fed from the transmitter (transmitter output power) into the cable or connecting device. "Actual power radiated from the antenna" is the transmitter output power minus the power lost (power losses) in the connecting device plus an apparent increase in power (if any) due to the design of the antenna. Radiated power is often specified in terms of "effective radiated power" or "ERP" or "effective isotropic radiated power" or "EIRP" (see footnote 14).

[7] Thus, by way of illustration, it takes 100,000 milliwatts of power to fully illuminate a 100 watt light bulb.

Scanned with CamScanner

below). In practice, however, since it is unrealistic to measure separately the exposure of each square centimeter of the body, actual compliance with the FCC limits on RF emissions should be determined by "spatially averaging" a person's exposure over the projected area of an adult human body (this concept is discussed in the FCC's OET Bulletin 65).

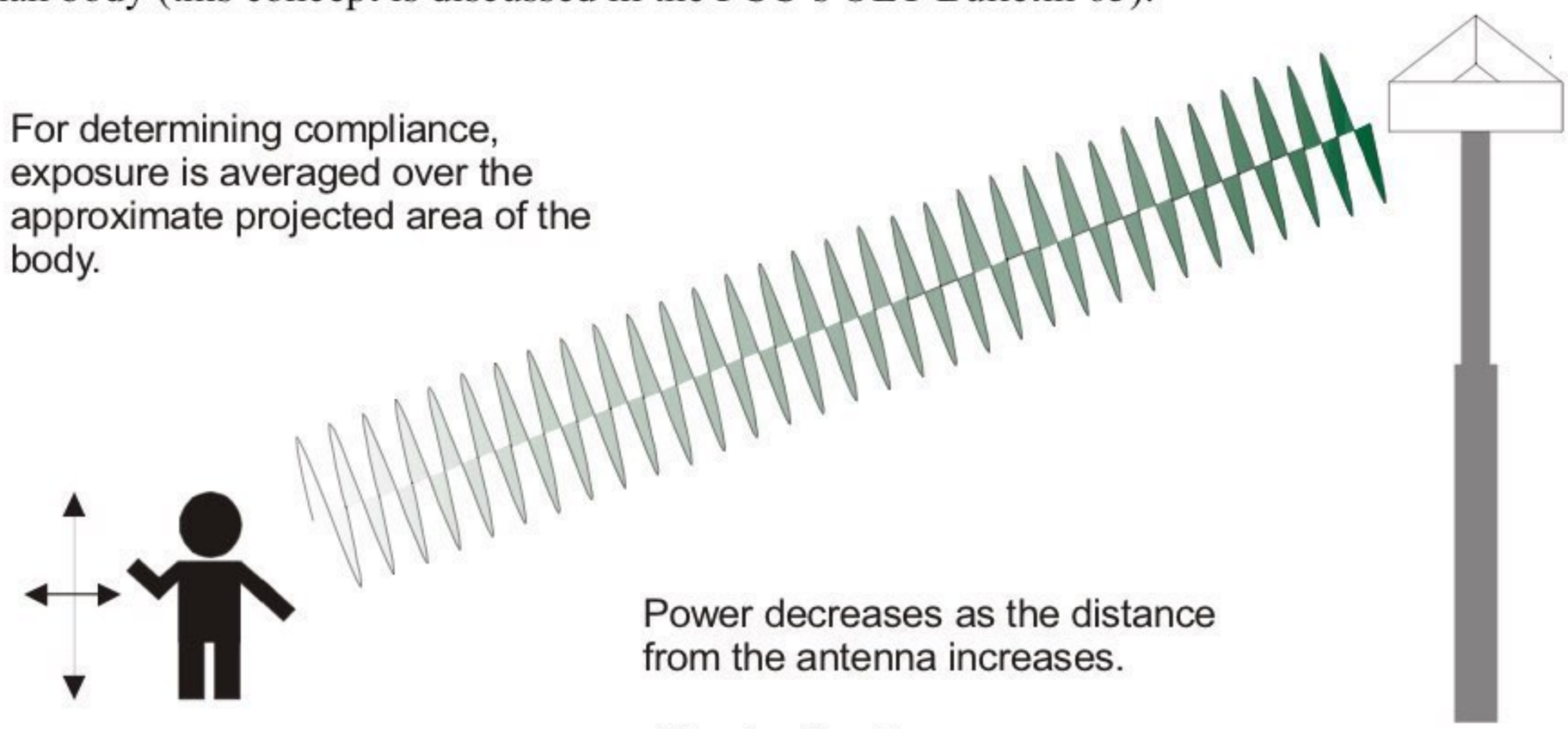

Illustration 2

Electric field strength and magnetic field strength are used to measure "near field" exposure. At frequencies below 300 MHz, these are typically the more relevant measures of exposure, and power density values are given primarily for reference purposes. However, evaluation of far-field equivalent power density exposure may still be appropriate for evaluating exposure in some such cases. For frequencies above 300 MHz, only one field component need be evaluated, and exposure is usually more easily characterized in terms of power density. Transmitters and antennas that operate at 300 MHz or lower include radio broadcast stations, some television broadcast stations, and certain personal wireless service facilities (*e.g.*, some paging stations). Most personal wireless services, including all cellular and PCS, as well as some television broadcast stations, operate at frequencies above 300 MHz. (See Illustration 1.)

As noted above, the MPE limits are specified as time-averaged exposure limits. This means that exposure can be averaged over the identified time interval (30 minutes for general population/uncontrolled exposure or 6 minutes for occupational/controlled exposure). However, for the case of exposure of the general public, time averaging is usually not applied because of uncertainties over exact exposure conditions and difficulty in controlling time of exposure. Therefore, the typical conservative approach is to assume that any RF exposure to the general public will be continuous. The FCC's limits for exposure at different frequencies are shown in Illustration 3, below:

Scanned with CamScanner

Illustration 3. ***FCC Limits for Maximum Permissible Exposure (MPE)***

(A) Limits for Occupational/Controlled Exposure

Frequency Range (MHz)	Electric Field Strength (E) (V/m)	Magnetic Field Strength (H) (A/m)	Power Density (S) (mW/cm^2)	Averaging Time $\|E\|^2$, $\|H\|^2$ or S (minutes)
0.3-3.0	614	1.63	(100)*	6
3.0-30	1842/f	4.89/f	$(900/f^2)$*	6
30-300	61.4	0.163	1.0	6
300-1500	--	--	f/300	6
1500-100,000	--	--	5	6

(B) Limits for General Population/Uncontrolled Exposure

Frequency Range (MHz)	Electric Field Strength (E) (V/m)	Magnetic Field Strength (H) (A/m)	Power Density (S) (mW/cm^2)	Averaging Time $\|E\|^2$, $\|H\|^2$ or S (minutes)
0.3-1.34	614	1.63	(100)*	30
1.34-30	824/f	2.19/f	$(180/f^2)$*	30
30-300	27.5	0.073	0.2	30
300-1500	--	--	f/1500	30
1500-100,000	--	--	1.0	30

f = frequency in MHz *Plane-wave equivalent power density

NOTE 1: Occupational/controlled limits apply in situations in which persons are exposed as a consequence of their employment provided those persons are fully aware of the potential for exposure and can exercise control over their exposure. Limits for occupational/controlled exposure also apply in situations when an individual is transient through a location where occupational/controlled limits apply provided he or she is made aware of the potential for exposure.

NOTE 2: General population/uncontrolled exposures apply in situations in which the general public may be exposed, or in which persons that are exposed as a consequence of their employment may not be fully aware of the potential for exposure or cannot exercise control over their exposure.

Finally, it is important to understand that the FCC's limits apply cumulatively to all sources of RF emissions affecting a given area. A common example is where two or more wireless operators have agreed to share the cost of building and maintaining a tower, and to place their antennas on that joint structure. In such a case, the total exposure from the two facilities taken together must be within the FCC guidelines, or else an EA will be required.

A. Categorically Excluded Facilities

The Commission has determined through calculations and technical analysis that due to their low power or height above ground level, many facilities by their very nature are highly unlikely to

Scanned with CamScanner

cause human exposures in excess of the guideline limits, and operators of those facilities are exempt from routinely having to determine compliance. Facilities with these characteristics are considered "categorically excluded" from the requirement for routine environmental processing for RF exposure.

Section 1.1307(b)(1) of the Commission's rules sets forth which facilities are categorically excluded.[8] If a facility is categorically excluded, an applicant or licensee may ordinarily assume compliance with the guideline limits for exposure. However, an applicant or licensee must evaluate and determine compliance for a facility that is otherwise categorically excluded if specifically requested to do so by the FCC.[9] If potential environmental significance is found as a result, an EA must be filed with the FCC.

No radio or television broadcast facilities are categorically excluded. Thus, broadcast applicants and licensees must affirmatively determine their facility's compliance with the guidelines before construction, and upon every facility modification or license renewal application. With respect to personal wireless services, a cellular facility is categorically excluded if the total effective radiated power (ERP) of all channels operated by the licensee at a site is 1000 watts or less. If the facility uses sectorized antennas, only the total effective radiated power in each direction is considered. Examples of a 3 sector and a single sector antenna array are shown below:

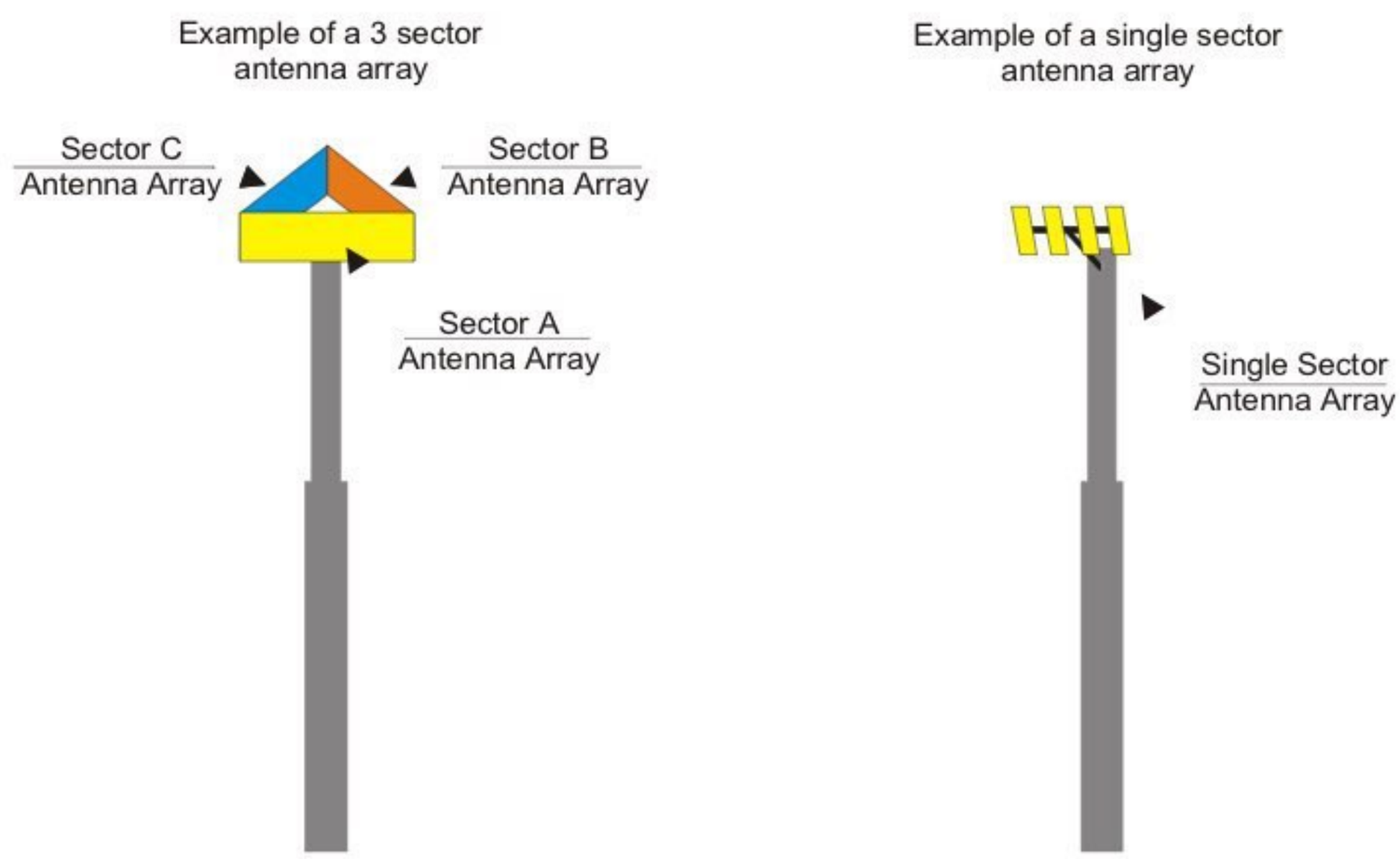

Illustration 4

[8] "The appropriate exposure limits . . . are generally applicable to all facilities, operations and transmitters regulated by the Commission. However, a determination of compliance with the exposure limits . . . (routine environmental evaluation), and preparation of an EA if the limits are exceeded, is necessary only for facilities, operations and transmitters that fall into the categories listed in table 1 [of §1.1307], or those specified in paragraph (b)(2) of this section. All other facilities, operations and transmitters are categorically excluded from making studies or preparing an EA . . ."

[9] See 47 C.F.R §1.1307(c) and (d).

Scanned with CamScanner

In addition, a cellular facility is categorically excluded, regardless of its power, if it is not mounted on a building and the lowest point of the antenna is at least 10 meters (about 33 feet) above ground level. A broadband PCS antenna array is categorically excluded if the total effective radiated power of all channels operated by the licensee at a site (or all channels in any one direction, in the case of sectorized antennas) is 2000 watts or less. Like cellular, another way for a broadband PCS facility to be categorically excluded is if it is not mounted on a building and the lowest point of the antenna is at least 10 meters (about 33 feet) above ground level. The power threshold for categorical exclusion is higher for broadband PCS than for cellular because broadband PCS operates at a higher frequency where exposure limits are less restrictive. For categorical exclusion thresholds for other personal wireless services, consult Table 1 of Section 1.1307(b)(1).[10]

For your convenience, we have developed the checklist in Appendix A that may be used to streamline the process of determining whether a proposed facility is categorically excluded. You are encouraged to adopt the use of this checklist in your jurisdiction, although such use is not mandatory.

B. What If An Applicant Or Licensee Wants To Exceed The Limits Shown In Illustration 3?

Any FCC applicant or licensee who wishes to construct or operate a facility that, by itself or in combination with other sources of emissions (*i.e.*, other transmitting antennas), may cause human exposures in excess of the guideline limits must file an Environmental Assessment (EA) with the FCC. Where more than one antenna is collocated (for example, on a single tower or rooftop or at a hilltop site), the applicant must take into consideration all of the RF power transmitted by all of the antennas when determining maximum exposure levels. Compliance at an existing site is the shared responsibility of all licensees whose transmitters produce exposure levels in excess of 5% of the applicable exposure limit. A new applicant is responsible for compliance (or submitting an EA) at a multiple-use site if the proposed transmitter would cause non-compliance and if it would produce exposure levels in excess of 5% of the applicable limit.[11]

An applicant or licensee is not permitted to construct or operate a facility that would result in exposure in excess of the guideline limits until the FCC has reviewed the EA and either found no significant environmental impact, or pursued further environmental processing including the preparation of a formal Environmental Impact Statement. As a practical matter, however, this process is almost never invoked for RF exposure issues because applicants and licensees normally undertake corrective actions to ensure compliance with the guidelines before submitting an application to the FCC.

Unless a facility is categorically excluded (explained above), the FCC's rules require a licensee to evaluate a proposed or existing facility's compliance with the RF exposure guidelines and to

[10] Table 1 of §1.1307(b)(1) is reproduced in Appendix A to this guide.

[11] For more information, see OET Bulletin 65, or see 47 CFR §1.1307(b)(3).

Scanned with CamScanner

determine whether an EA is required. In the case of broadcast licensees, who are required to obtain a construction permit from the FCC, this evaluation is required before the application for a construction permit is filed, or the facility is constructed. In addition, if a facility requires the filing of an EA for any reason other than RF emissions, the RF evaluation must be performed before the EA is filed. Factors other than RF emissions that may require the filing of an EA are set out in 47 C.F.R. § 1.1307(a). Otherwise, new facilities that do not require FCC-issued construction permits should be evaluated before they are placed in operation. The FCC also requires its licensees to evaluate existing facilities and operations that are not categorically excluded if the licensee seeks to modify its facilities or renew its license. These requirements are intended to enhance public safety by requiring periodic site compliance reviews.

All facilities that were placed in service before October 15, 1997 (when the current RF exposure guidelines became effective) are expected to comply with the current guidelines no later than September 1, 2000, or the date of a license renewal, whichever is earlier.[12] If a facility cannot meet the September 1, 2000, date, the licensee of that facility must file an EA by that date. Section 1.1307(b) of the FCC's rules requires the licensee to provide the FCC with technical information showing the basis for its determination of compliance upon request.

II. How the FCC Verifies Compliance with and Enforces Its Rules.

A. Procedures Upon Initial Construction, Modification, and Renewal.

The FCC's procedures for verifying that a new facility, or a facility that is the subject of a facility modification or license renewal application, will comply with the RF exposure rules vary depending upon the service involved. Applications for broadcast services (for example, AM and FM stations, and television stations) are reviewed by the FCC's Mass Media Bureau (MMB). As part of every relevant application, the MMB requires an applicant to submit an explanation of what steps will be taken to limit RF exposure and comply with FCC guidelines. The applicant must certify that RF exposure procedures will be coordinated with all collocated entities (usually other stations at a common transmitter site or hill or mountain peak). If the submitted explanation does not adequately demonstrate a facility's compliance with the guidelines, the MMB will require additional supporting data before granting the application.

The Wireless Telecommunications Bureau (WTB) reviews personal wireless service applications (for cellular, PCS, SMR, etc.). For those services that operate under blanket area licenses, including cellular and PCS, the license application and renewal form require the applicant to certify whether grant of the application would have a significant environmental impact so as to require submission of an EA. The applicant's answer to this question covers all of the facilities sites included within the area of the license.

For those services that continue to be licensed by site (*e.g.*, certain paging renewals), the WTB requires a similar certification on the application form for each site. To comply with the FCC's rules, an applicant must determine its own compliance before completing this certification for

[12] Prior to October 15, 1997, the Commission applied a different set of substantive guidelines.

Scanned with CamScanner

every site that is not categorically excluded. The WTB does not, however, routinely require the submission of any information supporting the determination of compliance.

B. Procedures For Responding To Complaints About Existing Facilities.

The FCC frequently receives inquiries from members of the public as to whether a particular site complies with the RF exposure guidelines. Upon receiving these inquiries, FCC staff may ask the inquiring party to describe the site at issue. In many instances, the information provided by the inquiring party does not raise any concern that the site could exceed the limits in the guidelines. FCC staff will then inform the inquiring party of this determination.

In some cases, the information provided by the inquiring party does not preclude the possibility that the limits could be exceeded. Under these circumstances, FCC staff may ask the licensee who operates the facility to supply information demonstrating its compliance. FCC staff may also inspect the site to determine whether it is accessible to the public, and examine other relevant physical attributes. Usually, the information obtained in this manner is sufficient to establish compliance. If compliance is established in this way, FCC staff will inform the inquiring party of this determination.

In some instances, a licensee may be unable to provide information sufficient to establish compliance with the guideline limits. In these cases, FCC staff may test the output levels of individual facilities and evaluate the physical installation. Keep in mind, however, that instances in which physical testing is necessary to verify compliance are relatively rare.

If a site is found to be out of compliance with the RF guidelines, the FCC will require the licensees at the site to remedy the situation. Depending on the service and the nature and extent of the violation, these remedies can include, for example, an immediate reduction in power, a modification of safety barriers, or a modification of the equipment or its installation. Actions necessary to bring a site into compliance are the shared responsibility of all licensees whose facilities cause exposures in that area that exceed 5% of the applicable MPE limit. In addition, licensees may be subject to sanctions for violating the FCC's rules and/or for misrepresentation.

The FCC is committed to responding fully, promptly, and accurately to all inquiries regarding compliance with the RF exposure guidelines, and to taking swift and appropriate action whenever the evidence suggests potential noncompliance. To perform this function effectively, however, the FCC needs accurate information about potentially problematic situations. By applying the principles discussed in this guide about RF emissions, exposure and the FCC's guidelines, state and local officials can fulfill a vital role in identifying and winnowing out situations that merit further attention.

III. Practical Guidance Regarding Compliance.

This section is intended to provide some general guidelines that can be used to identify sites that should not raise serious questions about compliance with FCC RF exposure guidelines. Sites that don't fall into the categories described here may still meet the guidelines, but the determination

Scanned with CamScanner

of compliance will not be as straightforward. In such cases, a detailed review may be required. The tables and graphs shown in Appendix B are intended only to assist in distinguishing sites that should not raise serious issues from sites that may require further inquiry. They are not intended for use in identifying sites that are out of compliance. As noted above, the factors that can affect exposure at any individual site, particularly a site containing multiple facilities, are too numerous and subtle to be practically encompassed within this framework.

Applying the basic principles discussed in this guide should allow you to eliminate a large number of sites from further consideration with respect to health concerns. You may find it useful to contact a qualified radio engineer to assist you in your inquiry. Many larger cities and counties, and most states, have radio engineers on staff or under contract. In smaller jurisdictions, we recommend you seek initial assistance from other jurisdictions, universities that have RF engineering programs, or perhaps the engineer in charge of your local broadcast station(s).

We'll exclude any discussion of broadcast sites. As explained before, broadcast licensees are required to submit site-specific information on each facility to the FCC for review, and that information is publicly available at the station as long as the application is pending. The focus in this section is on personal wireless services, particularly cellular and broadband PCS, the services that currently require the largest numbers of new and modified facilities. Many other personal wireless services, however, such as paging services, operate in approximately the same frequency ranges as cellular and broadband PCS.[13] Much of the information here is broadly applicable to those services as well, and specific information is provided in Appendix B for paging and narrowband PCS operations over frequency bands between 901 and 940 MHz.

Finally, this section only addresses the general population/uncontrolled exposure guidelines, since compliance with these guidelines generally causes the most concern to state and local governments. Compliance with occupational/controlled exposure limits should be examined independently.

A. Categorically Excluded Facilities.

As a first step in evaluating a siting application for compliance with the FCC's guidelines, you will probably want to consider whether the facility is categorically excluded under the FCC's rules from routine evaluation for compliance. The checklist in Appendix A will guide you in making this determination. Because categorically excluded facilities are unlikely to cause any exposure in excess of the FCC's guidelines, determination that a facility is categorically excluded should generally suffice to end the inquiry.

B. Single Facility Sites.

If a wireless telecommunications facility is not categorically excluded, you may want to evaluate potential exposure using the methods discussed below and the tables and figures in Appendix B.

---

[13] The major exception is fixed wireless services, which often operate at much higher frequencies. In addition, some paging and other licensees operate at lower frequencies

Scanned with CamScanner

If you "run the numbers" using the conservative approaches promoted in this paper and the site in question does not exceed these values, then you generally need look no further. Alternately, if the "numbers" don't pass muster, you may have a genuine concern. But remember, there may be other factors (*i.e.*, power level, height, blockages, etc.) that contribute to whether the site complies with FCC guidelines.

Where a site contains only one antenna array, the maximum exposure at any point in the horizontal plane can be predicted by calculations. The tables and graphs in Appendix B show the maximum distances in the horizontal plane from an antenna at which a person could possibly be exposed in excess of the guidelines at various levels of effective radiated power (ERP).[14] Thus, if people are not able to come closer to an antenna than the applicable distance shown in Appendix B, there should be no cause for concern about exposure exceeding the FCC guidelines. The tables and graphs apply to the following wireless antennas: (1) cellular omni-directional antennas (Table B1-1 and Figure B1-1); (2) cellular sectorized antennas (Table B1-2 and Figure B1-2); (3) broadband PCS sectorized antennas (Table B1-3 and Figure B1-3);[15] and (4) high-power (900 MHz-band) paging antennas (Table B1-4 and Figure B1-4). Table B1-4 and Figure B1-4 can also be used for omni-directional, narrowband (900 MHz) PCS antennas. Note that both tables and figures in Appendix B have been provided. In some cases it may be easier to use a table to estimate exposure distances, but figures may also be used when a more precise value is needed that may not be listed in a table.

It's important to note that the predicted distances set forth in Appendix B are based on a very conservative, "worst case" scenario. In other words, Appendix B identifies the furthest distance from the antenna that presents even a remote realistic possibility of RF exposure that could exceed the FCC guidelines. The power levels are based on the approximate maximum number of channels that an operator is likely to operate at one site. It is further assumed that each channel operates with the maximum power permitted under the FCC's rules and that all of these channels are "on" simultaneously, an unlikely scenario. This is a very conservative assumption. In reality, most sites operate at a fraction of the maximum permissible power and many sites use fewer than the maximum number of channels. Therefore, actual exposure levels would be expected to be well below the predicted values. Another mitigating factor could be the presence of intervening structures, such as walls, that will reduce RF exposure by variable amounts. For all these reasons, the values given in these tables and graphs are considered to be quite conservative and should over-predict actual exposure levels.

---

[14] ERP is the apparent effective amount of power leaving the transmit antenna. The ERP is determined by factors including but not limited to transmitter output power, coaxial line loss between the transmitter and the antenna, and the "gain" (focusing effect) of the antenna. In some cases, power may also be expressed in terms of EIRP (effective isotropically radiated power). Therefore, for convenience, the tables in Appendix B also include a column for EIRP. ERP and EIRP are related by the mathematical expression: (1.64) X ERP = EIRP.

[15] Because broadband PCS antennas are virtually always sectorized, no information is provided for omni-directional PCS antennas.

Scanned with CamScanner

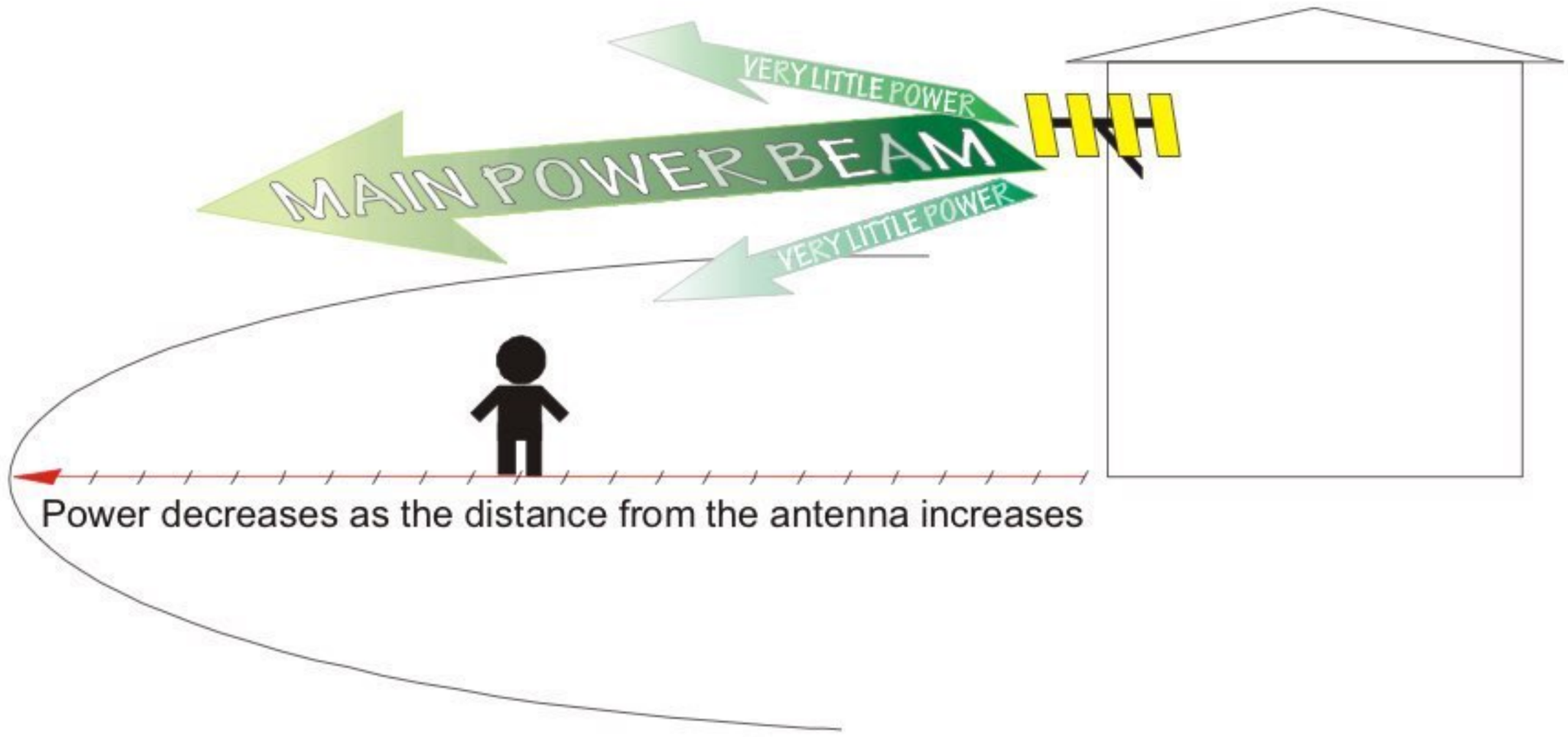

Illustration 5

Personal wireless service antennas typically do not emit high levels of RF energy directed above or below the horizontal plane of the antenna. Although the precise amount of energy transmitted outside the horizontal plane will depend upon the type of antenna used, we are aware of no wireless antennas that produce significant non-horizontal transmissions. Thus, exposures even a small distance below the horizontal plane of these antennas would be significantly less than in the horizontal plane. As discussed above, the tables and figures in Appendix B show distances in the horizontal plane from typical antennas at which exposures could potentially exceed the guidelines, assuming "worst case" operating conditions at maximum possible power levels. In any direction other than horizontal, including diagonal or straight down, these "worst case" distances would be significantly less.

Where unidirectional antennas are used, exposure levels within or outside the horizontal plane in directions other than those where the antennas are aimed will typically be insignificant. In addition, many new antennas are being designed with shielding capabilities to minimize emissions in undesired directions.

C. Multiple Facility Sites.

Where multiple facilities are located at a single site, the FCC's rules require the total exposure from all facilities to fall within the guideline limits, unless an EA is filed and approved. In such cases, however, calculations of predicted exposure levels and overall evaluation of the site may become much more complicated. For example, different transmitters at a site may operate different numbers of channels, or the operating power per channel may vary from transmitter to transmitter. Transmitters may also operate on different frequencies (for example, one antenna array may belong to a PCS operator, while the other belongs to a cellular operator). A large number of variables such as these make the calculations more time consuming, and make it difficult to apply a simple rule-of-thumb test. See the following illustration.

Scanned with CamScanner

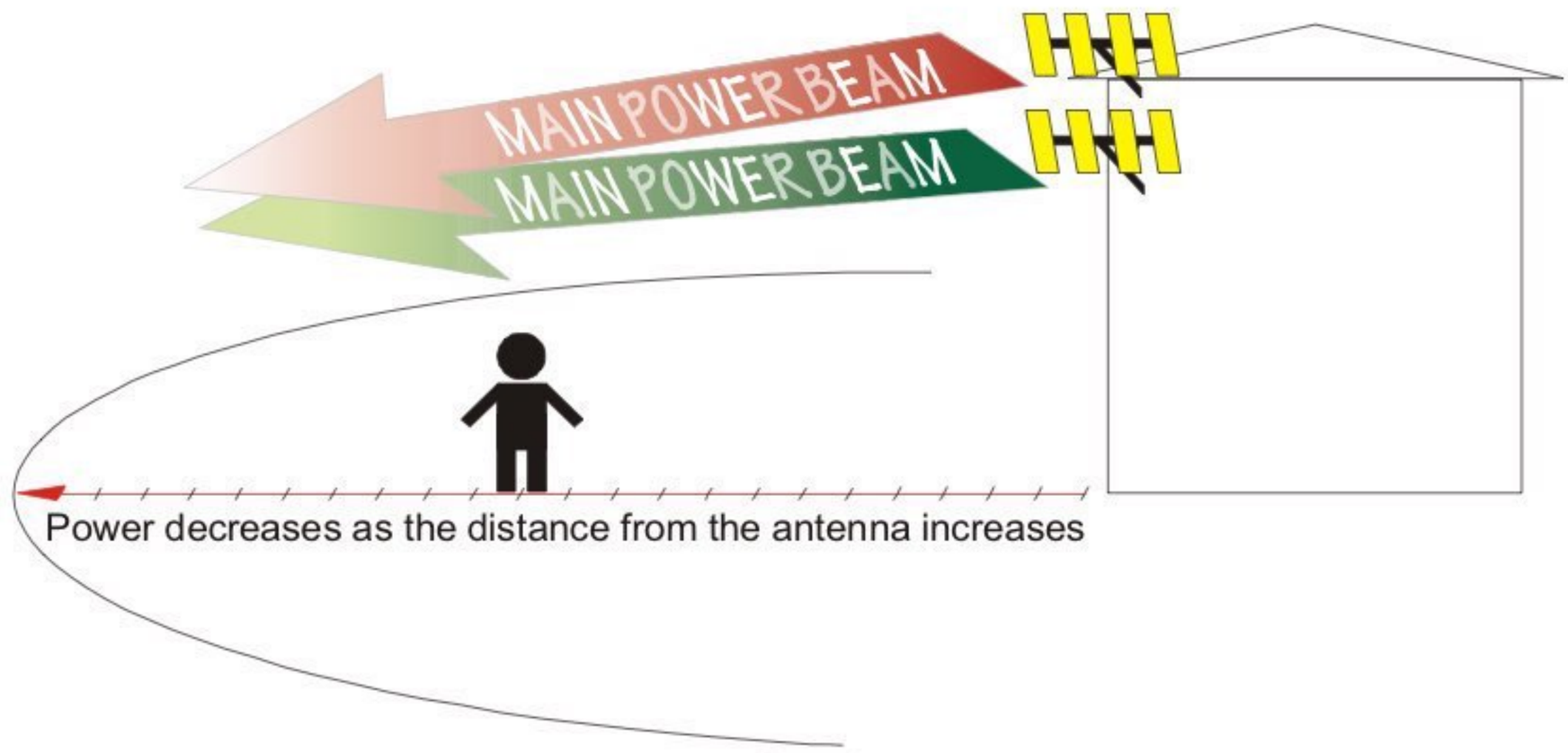

Illustration 6

However, we can be overly conservative and estimate a "worst case" exposure distance for compliance by assuming that the total power (e.g., ERP) of all transmitting antennas at the site is concentrated in the antenna that is closest to the area in question. (In the illustration above, this would be the antenna that is mounted lower on the building.) Then the values in the tables and graphs in Appendix B may be used as if this were the only antenna at the site, with radiated power equal to the sum of the actual radiated power of all antennas at the site. Actual RF exposure at any point will always be less than the exposure calculated using these assumptions. Thus, if people are not able to come closer to a group of antennas than the applicable distance shown in Appendix B using these assumptions, there should be no cause for concern about exposure exceeding the FCC guidelines. This is admittedly an extremely conservative procedure, but it may be of assistance in making a "first cut" at eliminating sites from further consideration.

IV. Conclusion.

We've highlighted many of the most common concerns and questions raised by the siting of wireless telecommunications and broadcast antennas. Applying the principles outlined in this guide will allow you to make initial conservative judgments about whether RF emissions are or should be of concern, consistent with the FCC's rules.

As we have explained, when first evaluating a siting application for compliance with the FCC's guidelines, you will probably want to consider whether the facility is categorically excluded under the FCC's rules from routine evaluation for compliance. The checklist in Appendix A will guide you in making this determination. Because categorically excluded facilities are unlikely to cause any exposure in excess of the FCC's guidelines, determination that a facility is categorically excluded should generally suffice to end the inquiry.

If a wireless telecommunications facility is not categorically excluded, you may want to evaluate potential exposure using the methods discussed in Part III of this paper and the tables and figures in Appendix B. If the site in question does not exceed the values, then you generally need look no further. Alternately, if the values don't pass muster, you may have a genuine concern. But

Scanned with CamScanner

remember, there may be other factors (*i.e.*, power level, height, blockages, etc.) that contribute to whether the site complies with FCC guidelines.

If you have questions about compliance, your initial point of exploration should be with the facilities operator in question. That operator is required to understand the FCC's rules and to know how to apply them in specific cases at specific sites. If, after diligently pursuing answers from the operator, you still have genuine questions regarding compliance, you should contact the FCC at one of the numbers listed below. Provision of the information identified in the checklist in Appendix A may assist the FCC in evaluating your inquiry.

General Information: Compliance and Information Bureau, (888) CALL-FCC

Concerns About RF Emissions Exposure at a Particular Site: Office of Engineering and Technology, RF Safety Program, phone (202) 418-2464, FAX (202) 418-1918, e-mail rfsafety@fcc.gov

Licensing and Site Information Regarding Wireless Telecommunications Services: Wireless Telecommunications Bureau, Commercial Wireless Division, (202) 418-0620

Licensing and Site Information Regarding Broadcast Radio Services: Mass Media Bureau, Audio Services Division, (202) 418-2700

Licensing and Site Information Regarding Television Service (Including DTV): Mass Media Bureau, Video Services Division, (202) 418-1600

Also, note that the RF Safety Program Web site is a valuable source of general information on the topic of potential biological effects and hazards of RF energy. For example, OET recently updated its OET Bulletin 56 ("Questions and Answers about Biological Effects and Potential Hazards of Radiofrequency Electromagnetic Fields"). This latest version is available from the program and can be accessed and downloaded from the FCC's web site at:

http://www.fcc.gov/oet/rfsafety/

Scanned with CamScanner

APPENDIX A

Optional Checklist for Determination

Of Whether a Facility is Categorically Excluded

Scanned with CamScanner

Optional Checklist for Local Government To Determine Whether a Facility is Categorically Excluded

Purpose: The FCC has determined that many wireless facilities are unlikely to cause human exposures in excess of RF exposure guidelines. Operators of those facilities are exempt from routinely having to determine their compliance. These facilities are termed "categorically excluded." Section 1.1307(b)(1) of the Commission's rules defines those categorically excluded facilities. This checklist will assist state and local government agencies in identifying those wireless facilities that are categorically excluded, and thus are highly unlikely to cause exposure in excess of the FCC's guidelines. Provision of the information identified on this checklist may also assist FCC staff in evaluating any inquiry regarding a facility's compliance with the RF exposure guidelines.

BACKGROUND INFORMATION

1. Facility Operator's Legal Name: _____
2. Facility Operator's Mailing Address: _____
3. Facility Operator's Contact Name/Title: _____
4. Facility Operator's Office Telephone: _____
5. Facility Operator's Fax: _____
6. Facility Name: _____
7. Facility Address: _____
8. Facility City/Community: _____
9. Facility State and Zip Code: _____
10. Latitude: _____
11. Longitude: _____

continue →

Scanned with CamScanner

Optional Local Government Checklist (page 2)

EVALUATION OF CATEGORICAL EXCLUSION

12. Licensed Radio Service (see attached Table 1): _____
13. Structure Type (free-standing or building/roof-mounted): _____
14. Antenna Type [omnidirectional or directional (includes sectored)]: _____
15. Height above ground of the lowest point of the antenna (in meters): _____
16. ☐ Check if all of the following are true:
    (a) This facility will be operated in the Multipoint Distribution Service, Paging and Radiotelephone Service, Cellular Radiotelephone Service, Narrowband or Broadband Personal Communications Service, Private Land Mobile Radio Services Paging Operations, Private Land Mobile Radio Service Specialized Mobile Radio, Local Multipoint Distribution Service, or service regulated under Part 74, Subpart I (see question 12).
    (b) This facility will not be mounted on a building (see question 13).
    (c) The lowest point of the antenna will be at least 10 meters above the ground (see question 15).

If box 16 is checked, this facility is categorically excluded and is unlikely to cause exposure in excess of the FCC's guidelines. The remainder of the checklist need not be completed. If box 16 is not checked, continue to question 17.

17. Enter the power threshold for categorical exclusion for this service from the attached Table 1 in watts ERP or EIRP* (note: EIRP = (1.64) X ERP): _____
18. Enter the total number of channels if this will be an omnidirectional antenna, or the maximum number of channels in any sector if this will be a sectored antenna:
19. Enter the ERP or EIRP per channel (using the same units as in question 17): _____
20. Multiply answer 18 by answer 19: _____
21. Is the answer to question 20 less than or equal to the value from question 17 (yes or no)?

If the answer to question 21 is YES, this facility is categorically excluded. It is unlikely to cause exposure in excess of the FCC's guidelines.

If the answer to question 21 is NO, this facility is not categorically excluded. Further investigation may be appropriate to verify whether the facility may cause exposure in excess of the FCC's guidelines.

*"ERP" means "effective radiated power" and "EIRP" means "effective isotropic radiated power

Scanned with CamScanner

TABLE 1: TRANSMITTERS, FACILITIES AND OPERATIONS SUBJECT TO ROUTINE ENVIRONMENTAL EVALUATION

SERVICE (TITLE 47 CFR RULE PART)	EVALUATION REQUIRED IF:
Experimental Radio Services (part 5)	power > 100 W ERP (164 W EIRP)
Multipoint Distribution Service (subpart K of part 21)	non-building-mounted antennas: height above ground level to lowest point of antenna < 10 m and power > 1640 W EIRP building-mounted antennas: power > 1640 W EIRP
Paging and Radiotelephone Service (subpart E of part 22)	non-building-mounted antennas: height above ground level to lowest point of antenna < 10 m and power > 1000 W ERP (1640 W EIRP) building-mounted antennas: power > 1000 W ERP (1640 W EIRP)
Cellular Radiotelephone Service (subpart H of part 22)	non-building-mounted antennas: height above ground level to lowest point of antenna < 10 m and total power of all channels > 1000 W ERP (1640 W EIRP) building-mounted antennas: total power of all channels > 1000 W ERP (1640 W EIRP)

Scanned with CamScanner

TABLE 1 (cont.)

SERVICE (TITLE 47 CFR RULE PART)	EVALUATION REQUIRED IF:
Personal Communications Services (part 24)	(1) Narrowband PCS (subpart D): non-building-mounted antennas: height above ground level to lowest point of antenna < 10 m and total power of all channels > 1000 W ERP (1640 W EIRP) building-mounted antennas: total power of all channels > 1000 W ERP (1640 W EIRP) (2) Broadband PCS (subpart E): non-building-mounted antennas: height above ground level to lowest point of antenna < 10 m and total power of all channels > 2000 W ERP (3280 W EIRP) building-mounted antennas: total power of all channels > 2000 W ERP (3280 W EIRP)
Satellite Communications (part 25)	all included
General Wireless Communications Service (part 26)	total power of all channels > 1640 W EIRP
Wireless Communications Service (part 27)	total power of all channels > 1640 W EIRP
Radio Broadcast Services (part 73)	all included

Scanned with CamScanner

TABLE 1 (cont.)

SERVICE (TITLE 47 CFR RULE PART)	EVALUATION REQUIRED IF:
Experimental, auxiliary, and special broadcast and other program distributional services (part 74)	subparts A, G, L: power > 100 W ERP subpart I: non-building-mounted antennas: height above ground level to lowest point of antenna < 10 m and power > 1640 W EIRP building-mounted antennas: power > 1640 W EIRP
Stations in the Maritime Services (part 80)	ship earth stations only
Private Land Mobile Radio Services Paging Operations (part 90)	non-building-mounted antennas: height above ground level to lowest point of antenna < 10 m and power > 1000 W ERP (1640 W EIRP) building-mounted antennas: power > 1000 W ERP (1640 W EIRP)
Private Land Mobile Radio Services Specialized Mobile Radio (part 90)	non-building-mounted antennas: height above ground level to lowest point of antenna < 10 m and total power of all channels > 1000 W ERP (1640 W EIRP) building-mounted antennas: total power of all channels > 1000 W ERP (1640 W EIRP)

Scanned with CamScanner

TABLE 1 (cont.)

SERVICE (TITLE 47 CFR RULE PART)	EVALUATION REQUIRED IF:
Amateur Radio Service (part 97)	transmitter output power > levels specified in § 97.13(c)(1) of this chapter
Local Multipoint Distribution Service (subpart L of part 101)	non-building-mounted antennas: height above ground level to lowest point of antenna < 10 m and power > 1640 W EIRP building-mounted antennas: power > 1640 W EIRP LMDS licensees are required to attach a label to subscriber transceiver antennas that: (1) provides adequate notice regarding potential radiofrequency safety hazards, *e.g.,* information regarding the safe minimum separation distance required between users and transceiver antennas; and (2) references the applicable FCC-adopted limits for radiofrequency exposure specified in § 1.1310 of this chapter.

Scanned with CamScanner

APPENDIX B

Estimated "Worst Case" Distances that Should be Maintained from Single Cellular, PCS, and Paging Base Station Antennas

Scanned with CamScanner

Table B1-1. Estimated "worst case" horizontal* distances that should be maintained from a single, omni-directional, **cellular base-station** antenna to meet FCC RF exposure guidelines

Effective Radiated Power (watts) per channel based on maximum total of 96 channels per antenna	Effective Isotropic Radiated Power (watts) per channel based on a maximum total of 96 channels per antenna	Horizontal* distance (feet) that should be maintained from a single omni-directional cellular antenna
0.5	0.82	3.4
1	1.6	4.8
5	8.2	10.8
10	16.4	15.2
25	41	24.1
50	82	34.1
100	164	48.2

For intermediate values not shown on this table, please refer to the Figure B1-1

*These distances are based on exposure at same level as the antenna, for example, on a rooftop or in a building directly across from and at the same height as the antenna.

Note: These estimates are worst case, assuming an omnidirectional antenna using 96 channels. If the systems are using fewer channels, the actual horizontal distances that must be maintained will be less. Cellular omnidirectional antennas transmit more or less equally from the antenna in all horizontal directions and transmit relatively little energy directly toward the ground. Therefore, these distances are even more conservative for "non-horizontal" distances, for example, distances directly below an antenna.

Scanned with CamScanner

Figure B1-1. Estimated "worst case" horizontal* distances that should be maintained from a single omni-directional **cellular base station** antenna to meet FCC RF exposure guidelines

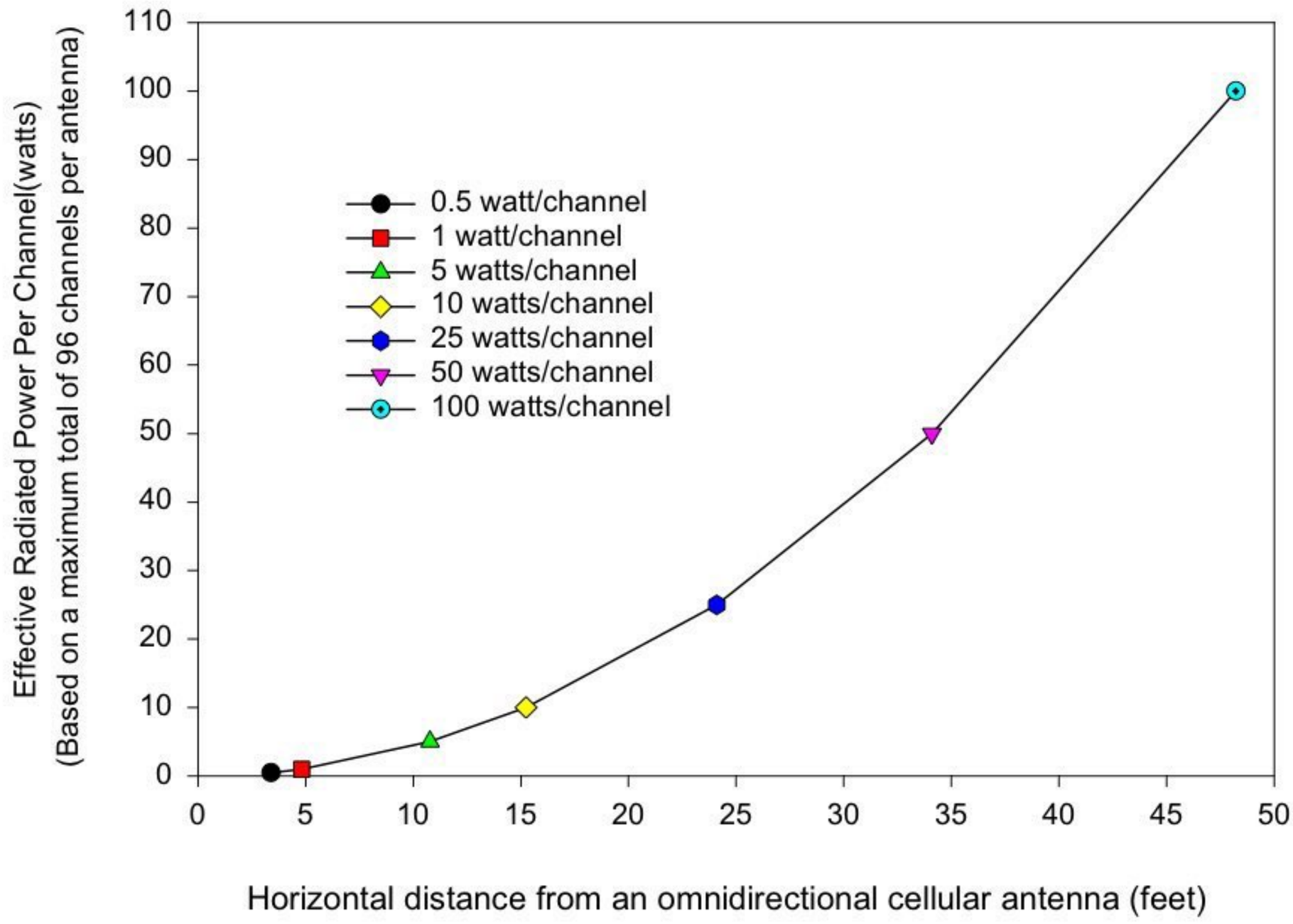

* These distances are based on exposure at same level as antenna, for example, on a rooftop or in a building directly across from and at the same height as the antenna.

Note: These estimates are worst case, assuming an omnidirectional antenna using 96 channels. If the systems are using fewer channels, the actual horizontal distances that must be maintained will be less. Cellular omnidirectional antennas transmit more or less equally from the antenna in all horizontal directions and transmit relatively little energy directly toward the ground.

Scanned with CamScanner

Table B1-2. Estimated "worst case" horizontal* distances that should be maintained from a single, sectorized, **cellular base-station** antenna to meet FCC RF exposure guidelines

Effective Radiated Power (watts) per channel based on maximum total of 21 channels per sector	Effective Isotropic Radiated Power (watts) per channel based on maximum total of 21 channels per sector	Horizontal* distance (feet) that should be maintained from a single sectorized cellular antenna
0.5	0.82	1.6
1	1.6	2.3
5	8.2	5
10	16.4	7.1
25	41	11.3
50	82	16
100	164	22.6

For intermediate values not shown on this table, please refer to the Figure B1-2

*These distances are based on exposure at same level as the antenna, for example, on a rooftop or in a building directly across from and at the same height as the antenna.

Note: These estimates are "worst case," assuming a sectorized antenna using 21 channels. If the systems are using fewer channels, the actual horizontal distances that must be maintained will be less. Cellular sectorized antennas transmit more or less in one direction from the antenna in a horizontal direction and transmit relatively little energy directly toward the ground. Therefore, these distances are even more conservative for "non-horizontal" distances, for example, distances directly below an antenna.

Scanned with CamScanner

Figure B1-2. Estimated "worst case" horizontal* distances that should be maintained from a single sectorized, **cellular base station** antenna to meet FCC RF exposure guidelines

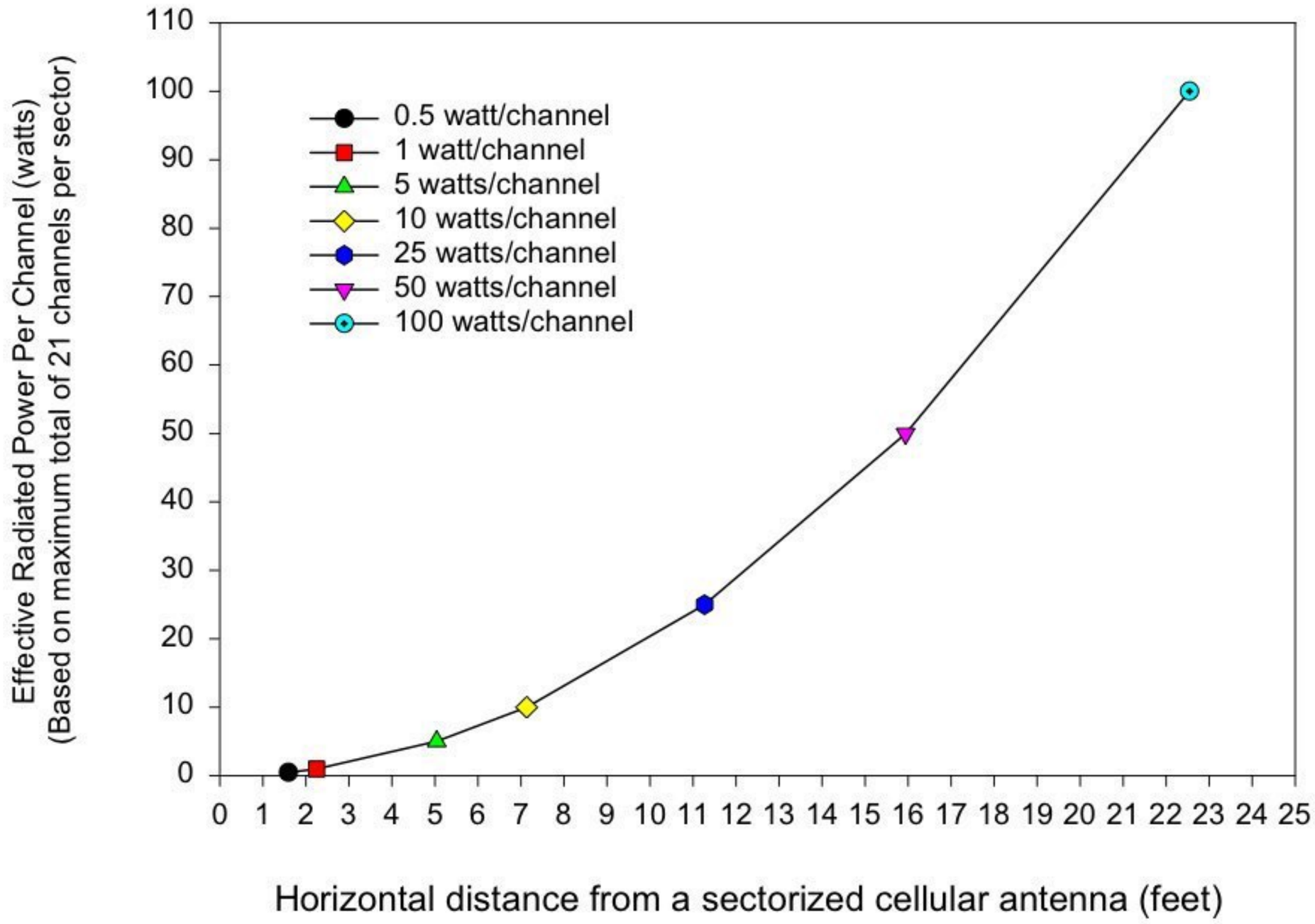

* These distances are based on exposure at same level as antenna, for example, on a rooftop or in a building directly across from and at the same height as the antenna.

Note: These estimates are "worst case", assuming a sectorized antenna using 21 channels. If the systems are using fewer channels, the actual horizontal distances that must be maintained will be less. Cellular sectorized antennas transmit more or less in one direction from the antenna in a horizontal direction and transmit relatively little energy directly toward the ground.

Scanned with CamScanner

Table B1-3. Estimated "worst case" horizontal* distances that should be maintained from a single sectorized **Broadband PCS base station** antenna to meet FCC RF exposure guidelines

Effective Radiated Power (watts) per channel based on maximum total of 21 channels per sector	Effective Isotropic Radiated Power (watts) per channel based on maximum total of 21 channels per sector	Horizontal* distance (feet) that should be maintained from a single sectorized Broadband PCS antenna
0.5	0.82	1.2
1	1.6	1.7
5	8.2	3.8
10	16.4	5.4
25	41	8.6
50	82	12.1
100	164	17.2

For intermediate values not shown on this table, please refer to the Figure B1-3

*These distances are based on exposure at same level as the antenna, for example, on a rooftop or in a building directly across from and at the same height as the antenna.

Note: These estimates are "worst case," assuming a sectorized antenna using 21 channels. If the system is using fewer than 21 channels, the actual horizontal distances that must be maintained will be less. PCS sectorized antennas transmit more or less in one direction from the antenna in a horizontal direction and transmit relatively little energy directly toward the ground. Therefore, these distances are even more conservative for "non-horizontal" distances, for example, distances directly below an antenna.

Scanned with CamScanner

Figure B1-3. Estimated "worst case" horizontal* distances that should be maintained from a single sectorized, **PCS base station** antenna to meet FCC RF exposure guidelines

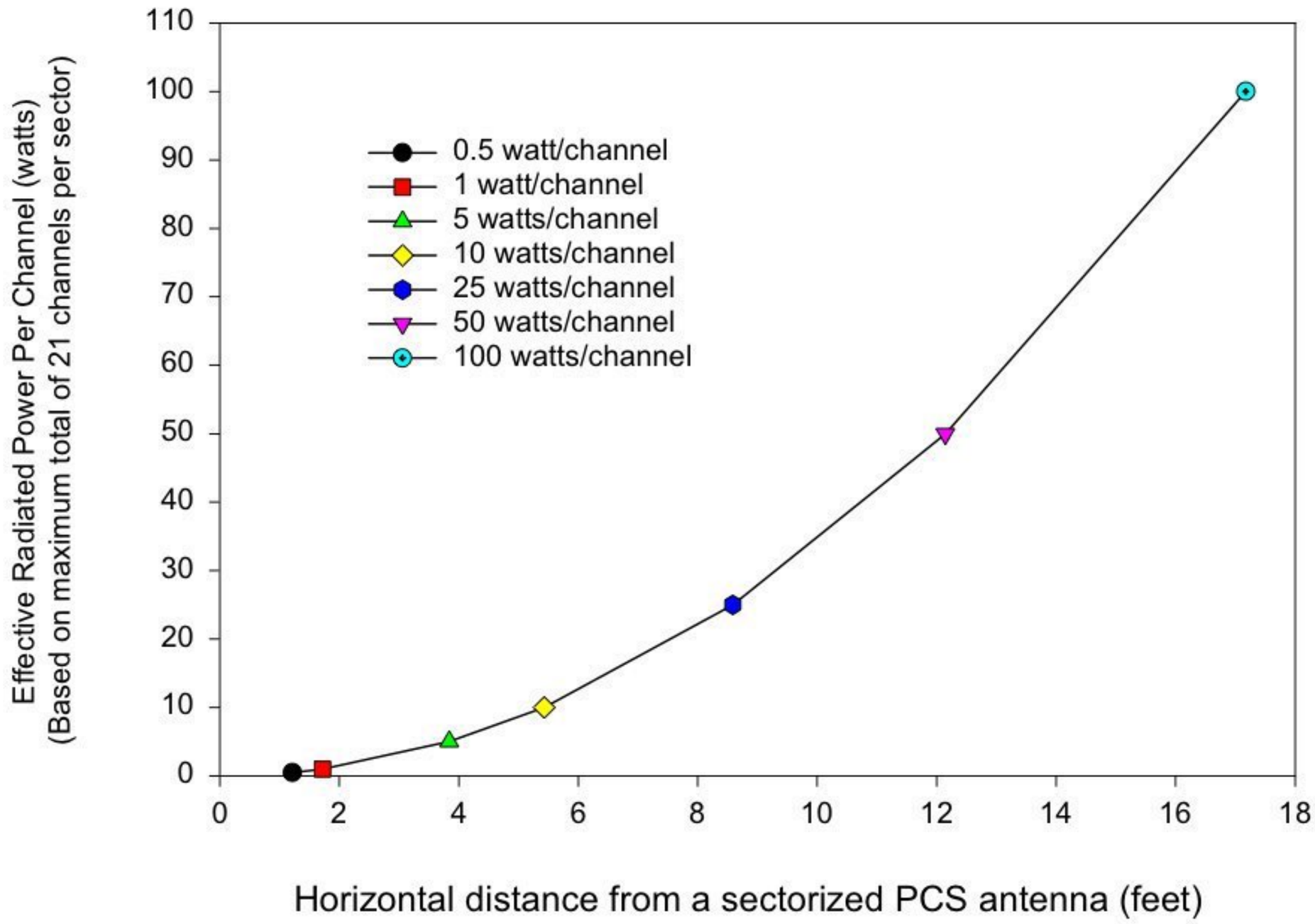

* These distances are based on exposure at same level as antenna, for example, on a rooftop or in a building directly across from and at the same height as the antenna.

Note: These estimates are "worst case", assuming a sectorized antenna using 21 channels. If the systems are using fewer channels, the actual horizontal distances that must be maintained will be less. PCS sectorized antennas transmit more or less in one direction from the antenna in a horizontal direction and transmit relatively little energy directly toward the ground.

Scanned with CamScanner

Table B1-4. Estimated "worst case" horizontal* distances that should be maintained from a single omnidirectional **paging** or **narrowband PCS** antenna to meet FCC RF exposure guidelines. Note: this table and the associated figure only apply to the 900-940 MHz band; paging antennas at other frequencies are subject to different values.

Effective Radiated Power (watts) based on one channel per antenna	Effective Isotropic Radiated Power (watts)	Horizontal* distance (feet) that should be maintained from a single omnidirectional paging or narrowband PCS antenna
50	82	3.4
100	164	4.8
250	410	7.5
500	820	10.6
1,000	1,640	15.1
2,000	3,280	21.3
3,500	5,740	28. 2

For intermediate values not shown on this table, please refer to the Figure B1-4

*These distances are based on exposure at same level as the antenna, for example, on a rooftop or in a building directly across from and at the same height as the antenna.

Note: These distances assume only one frequency (channel) per antenna. Distances would be greater if more than one channel is used per antenna. Omnidirectional paging and narrowband PCS antennas transmit more or less equally from the antenna in all horizontal directions and transmit relatively little energy toward the ground. Therefore, these distances are even more conservative for "non-horizontal" distances, for example, distances directly below an antenna.

Scanned with CamScanner

Figure B1-4. Estimated "worst case" horizontal* distances that should be maintained from a single omnidirectional **paging** or **narrowband PCS** antenna to meet FCC RF exposure guidelines. Note: this figure and the associated table only apply to the 900-940 MHz band; paging antennas at other frequencies are subject to different values

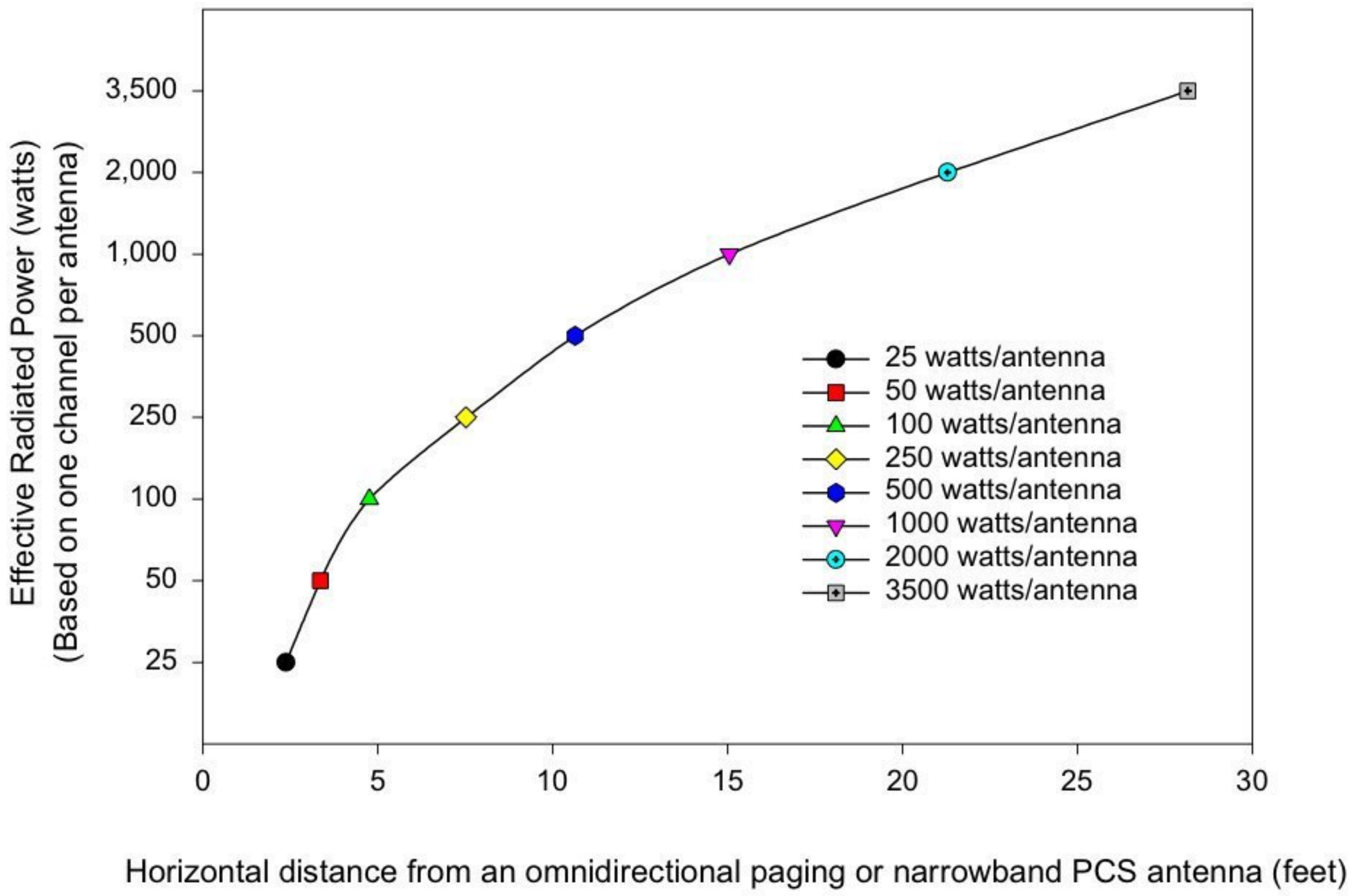

* These distances are based on exposure at the same level as the antenna, for example, on a rooftop or building directly across from and at the same height as the antenna.

Note: These distances assume only one frequency (channel) per antenna. Distances would be greater if more than one channel is used per antenna. Omnidirectional paging and narrowband PCS antennas transmit more or less equally from the antenna in all horizontal directions and transmit relatively little energy towards the ground.

Scanned with CamScanner

APPENDIX C

Text of 47 U.S.C. § 332(c)(7)

(7) PRESERVATION OF LOCAL ZONING AUTHORITY.

(A) GENERAL AUTHORITY. Except as provided in this paragraph, nothing in this Act shall limit or affect the authority of a State or local government or instrumentality thereof over decisions regarding the placement, construction, and modification of personal wireless service facilities.

(B) LIMITATIONS.

(i) The regulation of the placement, construction, and modification of personal wireless service facilities by and State or local government or instrumentality thereof (I) shall not unreasonably discriminate among providers of functionally equivalent services; and (II) shall not prohibit or have the effect of prohibiting the provision of personal wireless services.

(ii) A State or local government or instrumentality thereof shall act on any request for authorization to place, construct, or modify personal wireless service facilities within a reasonable period of time after the request is duly filed with such government or instrumentality, taking into account the nature and scope of such request.

(iii) Any decision by a State or local government or instrumentality thereof to deny a request to place, construct, or modify personal wireless service facilities shall be in writing and supported by substantial evidence contained in a written record.

(iv) No State or local government or instrumentality thereof may regulate the placement, construction, or modification of personal wireless service facilities on the basis of the environmental effects of radio frequency emissions to the extent that such facilities comply with the Commission's regulations concerning such emissions.

(v) Any person adversely affected by any final action or failure to act by a State or local government or any instrumentality thereof that is inconsistent with this subparagraph may, within 30 days after such action or failure to act, commence an action in any court of competent jurisdiction. The court shall hear and decide such action on an expedited basis. Any person adversely affected by an act or failure to act by a State or local government or any instrumentality thereof that is inconsistent with clause (iv) may petition the Commission for relief.

(C) DEFINITIONS. For purposes of this paragraph

(i) the term "personal wireless services" means commercial mobile services, unlicensed wireless services, and common carrier wireless exchange access services;

(ii) the term "personal wireless service facilities" means facilities for the provision of personal wireless services; and

(iii) the term "unlicensed wireless service" means the offering of telecommunications service using duly authorized devices which do not require individual licenses, but does not mean the provision of direct-to-home satellite services (as defined in section 303(v)).

Scanned with CamScanner

Ancel Glink

A Professional Corporation
175 E. Hawthorn Parkway, Suite 145
Vernon Hills, IL 60061
www.ancelglink.com

Adam B. Simon
asimon@ancelglink.com
(P) 847.856.5440
(F) 847.247.7405

MEMORANDUM

PRIVILEGED AND CONFIDENTIAL: ATTORNEY-CLIENT COMMUNICATION

To: Plan Commission
Village of Glen Ellyn

CC: Greg Mathews, Village Attorney

From: Adam B. Simon

Subject: Plan Commission Review of Applications to Collocate 5G Antennas

Date: March 1, 2023

The Village has requested that I provide an opinion regarding the factors the Plan Commission may consider in reviewing an application for installation of 5G wireless antenna(s) on an existing cell tower located on private property. As you know, the Village can only apply the zoning regulations which exist at the time the application is filed.

Background

There exists a monopole antenna support structure on the property located at 1102 Hill Avenue, Glen Ellyn, Illinois (the "Property"). I understand that the Property was formerly in the Village of Lombard, which in 1992 granted a special use permit for an 87-foot tall monopole antenna. The Property was subsequently disconnected from Lombard and the owner signed an Annexation Agreement with Glen Ellyn in 2013. The property was annexed to Glen Ellyn in 2018.

The Property is located within the I-1 Light Industrial District, which includes a height limit of 45 feet for structures in the District. Antenna support structures exceeding the 45-foot limit require approval of a special use permit. This support structure is 70 feet, and Section 10-4-19(B)(18), makes that a special use in the I-1 District. Likewise, Section 10-8-8 likewise expresses existing uses which are special uses shall not be nonconforming uses, but shall require a special use permit for any enlargement or extension or intensification or change of use.

The petitioners are Crown Castle and DISH Wireless.[1]

[1] By way of background, one of the Federal government's conditions of approval of the merger of T-Mobile and Sprint was that they needed to sell a share of their cellular licenses to DISH Wireless so the consumer market would retain four national cellular carriers. As a result, DISH Wireless is building out its own network now.

Federal Law

Cellular communication is deemed to be a matter of interstate concern and the federal government has therefore interceded, to a limited degree, into zoning regulations, an area that is normally reserved for state and local control. Specifically, Section 704 of the Telecommunications Act of 1996 (Telecommunications Act)[2] creates a balance between the federal priority for expansion of cellular communications and the local authority to control zoning decisions. Accordingly, both the federal rules and the local standards that shape a local zoning authority's jurisdiction and discretion are of importance.

Characterized as an exercise in cooperative federalism, the Telecommunication Act reserves to local governments authority over zoning decisions related to cellular tower and antenna placement and construction. There are, however, several significant constraints on this authority enumerated in the Telecommunication Act:[3]

(1) Nondiscrimination and Prohibition of Service: While state or local governments or instrumentalities may regulate the placement and construction of facilities, they shall not "discriminate among providers of functionally equivalent services," nor "prohibit or have the effect of prohibiting the provision of personal wireless services."

(2) Timeliness of Government Action: Local governments must "act on any request for authorization to place, construct, or modify personal wireless service facilities within a reasonable period of time after the request is duly filed . . . taking into account the nature and scope of such request."

(3) Evidence and Written Records: All governmental denials of requests "must be in writing and supported by substantial evidence contained in a written record."[4]

(4) Environmental and Health Concerns: State and local governments or their instrumentalities may not "regulate the placement, construction, and modification of personal wireless service facilities on the basis of the environmental effects of radio frequency emissions to the extent that such facilities comply with the Commission's regulations concerning such emissions."

---

[2] 47 U.S.C. §332(c)(7).
[3] 47 U.S.C. §332(c)(7)(B).
[4] This Federal requirement for a "closed record" applies despite the final decision being a legislative judgment reserved for the Village Board. Otherwise, under Illinois law a Village Board decision would be subject to de novo review on appeal. 65 ILCS 5/11-13-25(a).

Additional Limitations on Local Government Zoning Authority

Section 6409(a) of the Middle Class Tax Relief and Job Creation Act of 2012[5] (the "Collocation Law"), substantively amended the Telecommunications Act by limiting local government authority to control (a) the collocation of new facilities, and (b) the removal or replacement of facilities on existing towers or structures.

The pertinent language from Collocation Law states:

> (a) FACILITY MODIFICATIONS. —
>
> (1) IN GENERAL. — Notwithstanding section 704 of the Telecommunications Act of 1996[6] (Public Law 104–104) or any other provision of law, a State or local government may not deny, and shall approve, any eligible facilities request for a modification of an existing wireless tower or base station that ***does not substantially change the physical dimensions of such tower or base station***.
>
> (2) ELIGIBLE FACILITIES REQUEST.— For purposes of this subsection, the term "eligible facilities request" means any request for modification of an existing wireless tower or base station that involves —
>
> (A) ***collocation of new transmission equipment***;
> (B) removal of transmission equipment; or
> (C) replacement of transmission equipment.

To rephrase this more simply, the Village shall approve any application for collocation of new wireless antennas which does not substantially change the size of the tower or base station.

State Law

Many times when an application references a 5G antenna it is related to the deployment of a "small wireless facility," or "small cell," as defined by the Small Wireless Facility Deployment Act.[7] However, based on my review of the application the petitioner has described a conventional cellular installation which will operate in the "5G" radio band comprising an

[5] Pub. L. No. 112-96, § 6409(a), 126 Stat. 156 (2012) (codified at 47 U.S.C. § 1455(a)).
[6] Section 704 refers to 47 U.S.C. §332(c), the Federal law which sets the general limitations on local zoning authority as applied to personal wireless telecommunications facilities.
[7] 50 ILCS 840/1, et seq.

antenna platform and a set of three antennas that will cumulatively exceed six cubic feet in volume.[8] For this reason, the narrow restrictions on zoning authority applicable to small wireless facilities do not apply to this application.[9]

Village Ordinances

Aside from the Small Wireless Facility Deployment Act, Illinois law does not contain any express limitations regarding the exercise of municipal zoning power over personal wireless service facilities. As a result, the general rules of substantive due process apply to these applications in the same manner as other zoning applications. The zoning regulations applicable to personal wireless service facilities must be clear, predictable and bear a rational relationship to legitimate zoning purposes. They must also be applied in a consistent, nondiscriminatory manner.

As mentioned above, the application is requesting approval of a special use permit for the existing antenna support structure to ratify approval of the structure above the maximum height in the I-1 district. The Village's Zoning Code does not contain any supplemental regulations nor any supplemental application requirements applicable to antenna support structures. As a result, the proper scope of review for the Plan Commission is limited to evidence and testimony which is germane to the findings of fact required to recommend a special use permit.

Under Section 10-10-14(E) of the Zoning Code, the findings of fact for a special use permit are presented below:

> (E) The Plan Commission shall not recommend that a special use be granted nor shall the Village Board grant a special use, unless it shall find, based upon the evidence presented to the Plan Commission in each specific case, that the special use:
>
> 1. Will be harmonious with and in accordance with the general objectives, or within a specific objective of the Comprehensive Plan and/or this title;

[8] Although all cellular operators advertise 5G service, each carrier operates on a unique set of frequencies licensed by the FCC within the 5G band of the radio spectrum. There should not be confusion that all 5G antennas share the same frequencies.

[9] Caution should be observed when reviewing genuine small wireless facility applications because of the narrow restrictions on zoning authority and short decision deadlines permitted by the Small Wireless Facility Deployment Act. The Act provides that small wireless facilities shall be deemed permitted uses on property zoned for commercial or industrial use.

2. Will be designed, constructed, operated, and maintained so as to be harmonious and appropriate in appearance with the existing or intended character of the general vicinity and that such use will not change the essential character of the same area;

3. Will not be hazardous or disturbing to existing or future neighborhood uses;

4. Will be served adequately by essential public facilities and services such as highways, streets, police and fire protection, drainage structures, refuse disposal, water, sewers and schools, or that the persons or agencies responsible for the establishment of the proposed use shall be able to provide adequately any such services;

5. Will not create excessive additional requirements at public cost for public facilities and services, and will not be detrimental to the economic welfare of the Village;

6. Will not involve uses, activities, processes, materials, equipment and/or conditions of operation that will be detrimental to any persons, property or the general welfare by reason of excessive production of traffic, noise, smoke, fumes, glare or odors;

7. Will have vehicular approaches to the property, which shall be so designed as not to create an undue interference with traffic on surrounding public streets or roads;

8. Will not increase the potential for flood damage to adjacent property or require additional public expense for flood protection, rescue or relief; and

9. Will not result in destruction, loss or damage of natural, scenic or historic features of major importance to the community;

Based on the foregoing, the Plan Commission should only consider evidence and testimony which tends to support or dispute these findings of fact, subject to the restrictions contained in Federal law described above (e.g. exclusion of health effects of RF emissions).

As a reminder, the Plan Commission may recommend and the Village Board may require such conditions and restrictions upon the premises benefited by a special use as may be necessary in their opinion to comply with the foregoing standards and to reduce or minimize injurious effect of such special use upon other property in the neighborhood.

Analysis

The review of this application should be bifurcated between the antenna support structure and the new DISH Wireless antenna attachment. As mentioned above, the monopole requires a special use permit because it exceeds the permitted height in the I-1 district. The Village is allowed to review the special use permit application because this facility has not previously received any zoning approval from Glen Ellyn. This application should follow the permitted scope of review described in the preceding section.

However, if the special use permit is granted to allow the monopole to be 70' tall, the new antenna attachment becomes a collocation, rather than a new structure, and falls within the scope of the Collocation Law.[10] In reviewing the presentation packet filed by DISH Wireless, LLC, the application for the antenna attachment to the monopole seems to be an eligible facility request that does not substantially change the physical dimensions of the tower. The proposal does not (1) increase the height of the tower, (2) require installation of more than one new equipment shelter, (3) add an appurtenance to the tower which would protrude too greatly, or (4) involve excavation outside the boundaries of the current cellular compound or the related easements. Based on these findings, the application is one which the Village must approve.

Although the Village must approve the application to collocate the DISH Wireless antenna attachment, the Village may still apply reasonable conditions to enforce generally applicable public safety regulations (e.g. electric code, building code) to ensure the new antennas are erected safely.

Please let me know if you have any questions about the findings and opinions in this memorandum.

[10] Moreover, Section 10-4-19(A)(24) would make all new antenna applications which do not exceed the height permitted for the monopole a permitted use.

APPLICATION FOR SPECIAL USE PERMIT

CLEAR PAGE

The undersigned petitions the President and Village Board of Trustees of the Village of Glen Ellyn, Illinois, to consider the Special Use described in this application.

Date Filed: _____ Application No: _____

Name of Applicant: TONY PHILLIPS - FULLERTON ENGINEERING CONSULTANTS, LLC
OBO CROWN CASTLE USA INC & DISH WIRELESS LLC

Address of Applicant: 1100 E WOODFIELD RD., SUITE 500, SCHAUMBURG, IL 60173

Business Phone: 847-331-3659 Fax: N/A

Home Phone: N/A Mobile Phone: 847-331-3659

Email: tphillips@fullertonengineering.com

Property Interest of Applicant: AGENT FOR CROWN CASTLE USA INC / DISH WIRELESS LLC

(Owner, Contract Purchaser, Owner Representative)

Name of Owner: JAC PROPERTIES GE LLC

Address of Owner: 4554 E ECO INDUSTRIAL PLACE, TUCSON, AZ 85756

Business Phone: _____ Fax: _____

Home Phone: _____ Mobile Phone: _____

Email: _____

Property Address: 1102 HILL AVENUE, GLEN ELLYN, IL 60137

Legal Description of Property:

PENDING LEGAL DESC

Permanent Index No. (PIN): 0512207033 Zoning: I-1 INDUSTRIAL

Lot Dimensions: 265'x227'x202'x104' Lot Area: .85 ACRES

Present Use:

WIRELESS FACILITIES & WAREHOUSE

Requested Use/Construction:

NO CHANGE IN USE

Estimated Date to Begin New Use/Construction: TBD

Name(s), Address(es) and Phone No(s). of Experts (architects, engineers, etc.): CLEAR PAGE

SITE DESIGNER:
CHRISTOPHER J. WARREN P.E.
INFINIGY
2500 W. HIGGINS RD. SUITE 500
HOFFMAN ESTATES, IL 60169
847-648-4068

Narrative Statement evaluating the economic effects on adjoining property, the effect of such elements as noise, glare, odor, fumes and vibration on adjoining property, a discussion of the general compatibility with the adjacent and other properties in the district, the effect of traffic, and the relationship of the proposed use to the Comprehensive Plan, and how it fulfills the requirements of paragraph (E) of Section 10-10-14 of the Zoning Code:

The proposed addition of new DISH Wireless antennas and ground equipment to the existing Wireless Facility is considered a Minor Modification and a preferred siting option for new wireless equipment. There will be no noise, glare, odor, fumes, or vibration that might effect adjoining properties. It will be unmanned and have no effect on traffic.
Responses to Paragraph E Section 10-10-14 of Zoning Code below.

Describe How the Special Use:

1. Will be harmonious with and in accordance with the general objectives, or within a specific objective of the Comprehensive Plan and/or this Zoning Code:

   Wireless Communications have been designated Critical Infrastructure by the Federal Government and should be considered Essential Services in all Comprehensive Plans. Adding a New Carrier to an existing wireless support structure in the Industrial Zoning District should be near the top of the siting hierarchy.

2. Will be designed, constructed, operated, and maintained so as to be harmonious and appropriate in appearance with the existing or intended character of the general vicinity and that such use will not change the essential character of the same area:

   The proposed addition of DISH Wireless antennas to an existing support structure without adding to the height of the structure, along with the addition of the proposed DISH Wireless ground support equipment within an existing equipment compound behind an industrial building adjacent to Railroad Tracks will not change the character and be harmonious.

3. Will not be hazardous or disturbing to existing or future neighborhood uses:

   The proposed addition of the DISH Wireless equipment will not be hazardous or disturb future uses.

CLEAR PAGE

4. Will be served adequately by essential public facilities and services such as highways, streets, police and fire protection, drainage structures, refuse disposal, water, sewers and schools, or that the persons or agencies responsible for the establishment of the proposed use shall be able to provide adequately any such services:

The proposed use will be unmanned and only require Power and Fiber connections that are already existing at the site. No other public services will be required or impacted.

5. Will not create excessive additional requirements at public cost for public facilities and services, and will not be detrimental to the economic welfare of the Village:

As mentioned above, this will be an unmanned facility and will not be detrimental to the economic welfare of the Village.

6. Will not involve uses, activities, processes, materials, equipment and/or conditions of operation that will be detrimental to any persons, property or the general welfare by reason of excessive production of traffic, noise, smoke, fumes, glare or odors:

The proposed use will not be detrimental to any persons, property, or general welfare and will not create traffic, noise, smoke, fumes, glare, or odors.

7. Will have vehicular approaches to the property, which shall be so designed as not to create an undue interference with traffic on surrounding public streets or roads:

The proposed use will be unmanned and not create interference to traffic. It will be serviced via an existing driveway by a single technician approximately once a month.

8. Will not increase the potential for flood damage to adjacent property or require additional public expense for flood protection, rescue or relief:

The proposed use will not change the topography of the site or create any measurable run off. There will be absolutely zero increase in the potential for flooding.

9. Will not result in destruction, loss or damage of natural, scenic or historic features of major importance to the community:

The proposed addition of the DISH Wireless equipment to an existing support structure within an existing equipment compound in a Industrial District behind a warehouse adjacent to railroad tracks will not result in destruction, loss, or damage of natural, scenic or historic features of major importance to the community.

CLEAR PAGE

I (We) certify that all of the statements and documents submitted as part of this application are true to the best of my (our) knowledge and belief.

I (We) consent to the entry in or upon the premises described in this application by any authorized official of the Village of Glen Ellyn for the purpose of inspection.

I (We) consent to pay the Village of Glen Ellyn all costs incurred for transcribing the public hearing on this application.

I (We) understand that no final action shall be taken by the Village Board subsequent to the public hearing until and upon payment of transcribing fees.

4/2/2022	**TONY PHILLIPS-FULLERTON**	Tony Phillips Digitally signed by Tony Phillips DN: cn=Tony Phillips, o=Fullerton Engineering, ou=Zoning & Permitting, email=tphillips@fullertonengineering.com, c=US Date: 2022.04.02 20:04:43 -05'00'
Date	Print Name	Signature of Applicant
Date	Print Name	Signature of Applicant
Date	Print Name	Signature of Applicant

THE BEST INTERESTS OF THE APPLICANT WILL BE SERVED BY COMPLETING THIS APPLICATION IN DETAIL

AFFIDAVIT OF AUTHORIZATION

I, Jesika Streit, Crown Castle owner of the property described as

1102 HILL AVENUE, GLEN ELLYN, IL 60137

verify that FULLERTON ENGINEERING CONSULTANTS, LLC

is duly authorized to apply and represent my interests before the Glen Ellyn Plan Commission, Zoning Board of Appeals, and/or Village Board of Trustees. Owner acknowledges that any notice given applicant is actual notice to owner.

OWNER SIGNATURE

Subscribed and sworn to before me this

26th day of May, 2022

Clarice S Gauer

Notary Public

Notary Public State of Arizona
Maricopa County
Clarice S Gauer
My Commission Expires 12/3/2025
Commission Number 617041

X:\Plandev\PLANNING\FORMS\Special Use Permit Packet 020620lg.docx

(DRAFT) FINDINGS OF FACT TO SUPPORT A MOTION TO RECOMMEND APPROVAL OF A SPECIAL USE PERMIT TO ALLOW AN ADDITION OF DISH WIRELESS 5G CAPABLE ANTENNAS AND SUPPORT EQUIPMENT TO THE EXISTING CELLULAR TOWER AT 1102 HILL AVENUE

(Draft reasons, taken partially from the petitioner's application packet, as to how the project may comply with the necessary findings have been drafted by Staff; the Commission may wish to consider the findings but should feel free to amend the below reasons to make your own findings of fact based upon information provided at the public hearing).

1. The proposed use will be harmonious and in accordance with the general objectives, or within a specific objective of the Comprehensive Plan and/or Zoning Code, because the cellular tower is existing and is a compatible use within the Light Industrial District in which it's located. Wireless communications including 5G have been designated critical infrastructure by the federal government and the expansion of a new carrier to an existing wireless support structure supports this.

2. The proposed use will be designed, constructed, operated, and maintained so as to be harmonious and appropriate in appearance with the existing or intended character of the general vicinity and that such use will not change the essential character of the same area because the DISH Wireless antennas construction will be consistent with the existing cellular tower at the site and therefore will remain harmonious and appropriate with the existing character of the vicinity. DISH Wireless's antennas and ground equipment will not increase the height or footprint of the existing structure.

3. The proposed use will not be hazardous or disturbing to existing or future neighborhood uses of the property because the addition will be similar to the carriers previously operating at the site. The location of the existing tower also provides the adequate buffer from surrounding neighborhood uses and therefore poses no hazard or disturbance. The installation of the new DISH Wireless will comply with all applicable Building and Electrical Codes. The DISH Wireless and 5G technologies will also meet all the FCC rules regarding interference to other radio services and human exposure to radio frequency energy.

4. The proposed use will be served adequately by existing public facilities and services such as highways, streets, police, fire protection, drainage structure, refuse disposal, water, sewers and schools because as constructed the existing tower is currently covered by local emergency services and does not require any sewer, water, refuse disposal or school services. The expansion will change neither the nature of this facility nor its public services requirements.

5. The proposed use will not create excessive additional requirements at public cost for public facilities and services and will not be detrimental to the economic welfare of the Village because as noted in the above response, this proposal will not significantly change the use and nature of the existing tower and therefore will not create excessive additional requirements at a public cost. The new 5G technologies will meet all the FCC rules regarding interference to other radio services and human exposure to radio frequency energy.

6. The use will not involve activities, processes, materials, equipment and/or conditions of operation that will be detrimental to any persons, property or the general welfare by reason of excessive production of traffic, noise, smoke, fumes, glare and odors because the facility and new Wireless DISH with 5G will not generate any noise, smoke, fumes, glare, or odors and all FCC rules and regulations will be met. It will generate nominal traffic for scheduled maintenance visits.

7. The development will have vehicular approaches to the property, which shall be so designed as not to create an undue interference with traffic on surrounding public streets or roads because the existing cellular tower is and will continue to be unmanned and will be serviced via the existing driveway by a single technician approximately once a month.

8. The development will not increase the potential for flood damage to adjacent property or require additional pubic expense for flood protection, rescue or relief because the expansion of equipment will not change footprint which will pose no increase in potential for flood damage to adjacent property. Nor will it require additional public expenses for flood protection, rescue or relief.

9. The development will not result in destruction, loss or damage of natural, scenic or historic features of major importance to the community because there are no major changes proposed to the structure or the site that would cause any damage to the character, environment, or community resources. As part of installation of 5G technology, all FCC requirements will be met.

(DRAFT) MOTION TO RECOMMEND APPROVAL OF A SPECIAL USE PERMIT TO ALLOW AN ADDITION OF DISH WIRELESS ANTENNAS 5G CAPABLE AND SUPPORT EQIPMENT TO THE EXISTING CELLULAR TOWER AT 1102 HILL AVE.

After conducting a public hearing and deliberating on the request of the petitioner, Tony Phillips of Fullerton Engineers Consultants LLC, on behalf of Crown Castle USA Inc. and DISH Wireless LLC, for approval of a Special Use Permit to allow an addition of DISH Wireless antennas 5G capable and support equipment to the existing cellular tower at 1102 Hill Avenue in the I1 Light Industrial District, the Plan Commission hereby recommends approval based on the findings of fact, as discussed or amended at the Plan Commission meeting held on May 25, 2023, which are hereby incorporated into the Motion by reference as though fully set forth herein, and a copy of which will be attached to the minutes of this meeting and kept on file as part of the permanent records of the Village. The Plan Commission makes this recommendation of approval with the following conditions:

1. That the new DISH Wireless antenna with 5G technology added to the existing cellular tower be operated in substantial conformance with the plans and testimony presented at the Plan Commission public hearing and before the Village Board of Trustees.

Motion by: _____ Seconded by: _____

GISConsortium | Zoning Map - 1102 Hill Ave

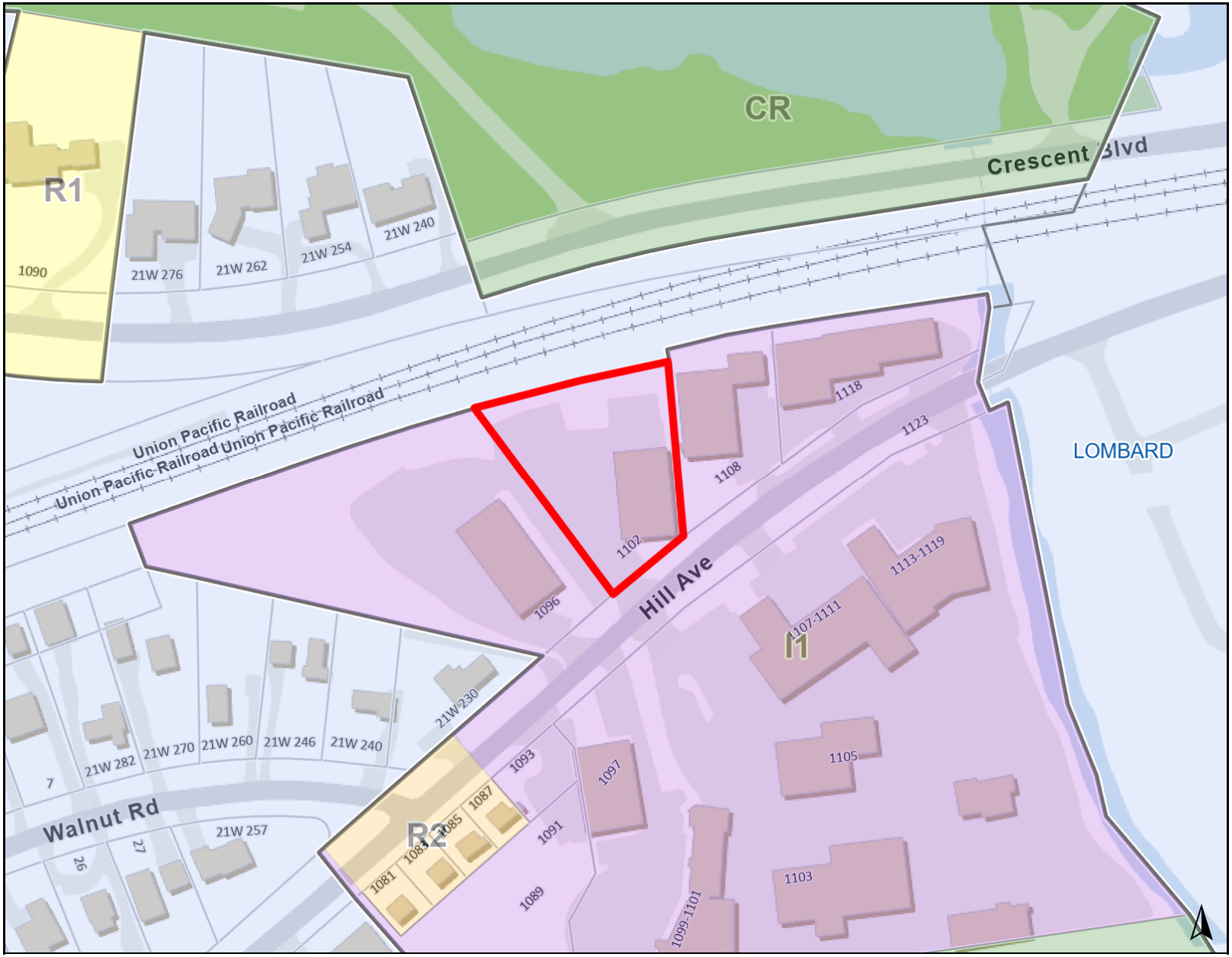

Legend

Zoning and Development

Zoning

- CR: Conservation/Recreation District
- I1: Light Industrial District
- R1: Single Family Residential District
- R2: Single Family Residential District

0 300 600 ft

Print Date: 6/2/2022

Notes

Disclaimer: The GIS Consortium and MGP Inc. are not liable for any use, misuse, modification or disclosure of any map provided under applicable law. This map is for general information purposes only. Although the information is believed to be generally accurate, errors may exist and the user should independently confirm for accuracy. The map does not constitute a regulatory determination and is not a base for engineering design. A Registered Land Surveyor should be consulted to determine precise location boundaries on the ground.

GISConsortium | Aerial View - 1102 Hill Ave

Legend

0 150 300 ft

Print Date: 6/2/2022

Notes

Disclaimer: The GIS Consortium and MGP Inc. are not liable for any use, misuse, modification or disclosure of any map provided under applicable law. This map is for general information purposes only. Although the information is believed to be generally accurate, errors may exist and the user should independently confirm for accuracy. The map does not constitute a regulatory determination and is not a base for engineering design. A Registered Land Surveyor should be consulted to determine precise location boundaries on the ground.

PLAT OF SURVEY

NORTH

SCALE: 1" = 20'
BEARINGS ARE FOR ANGULAR REFERENCE ONLY AND ARE NOT RELATED TO TRUE OR MAGNETIC NORTH

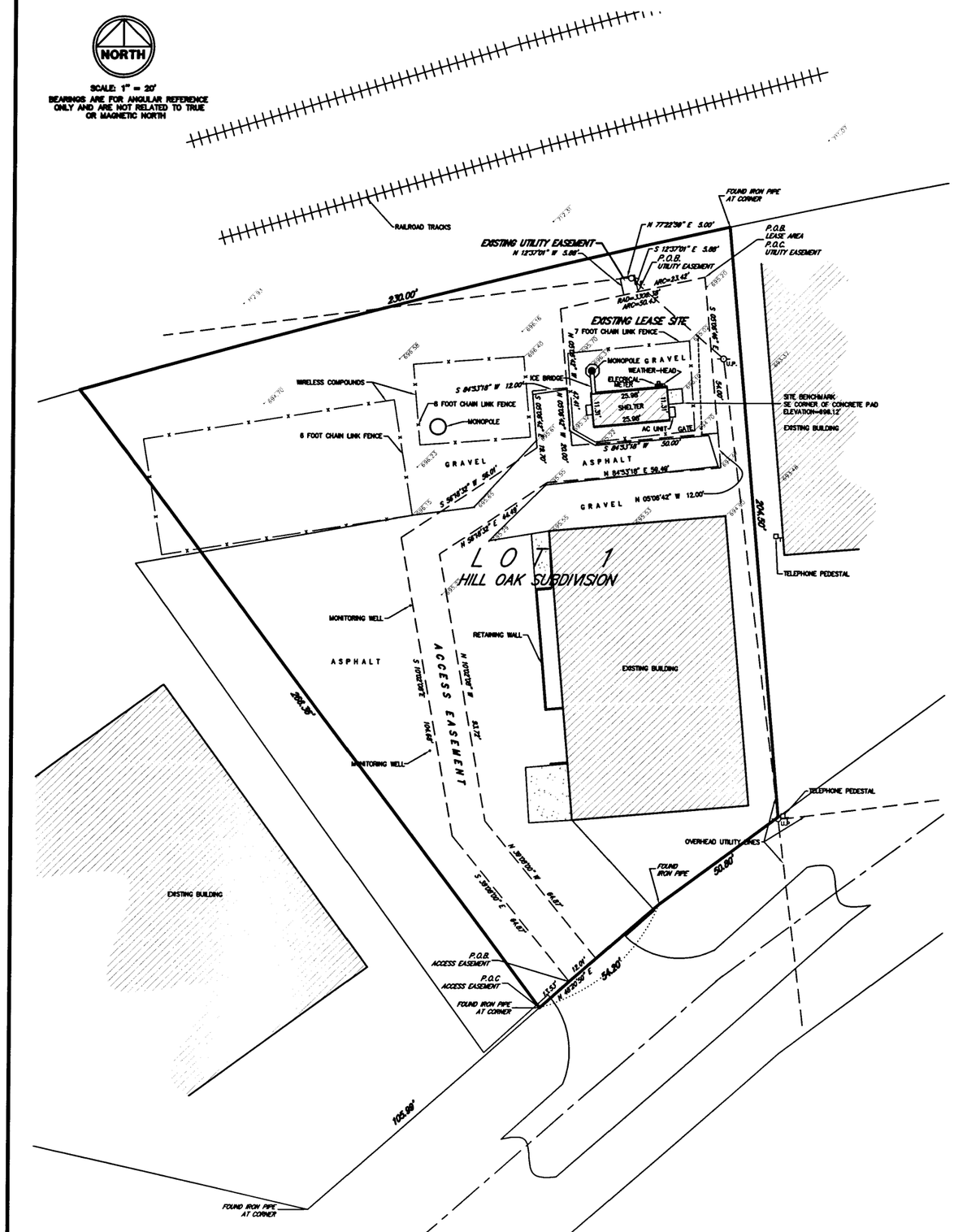

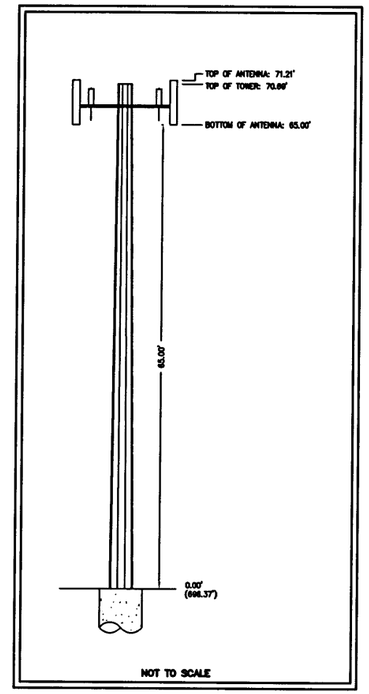

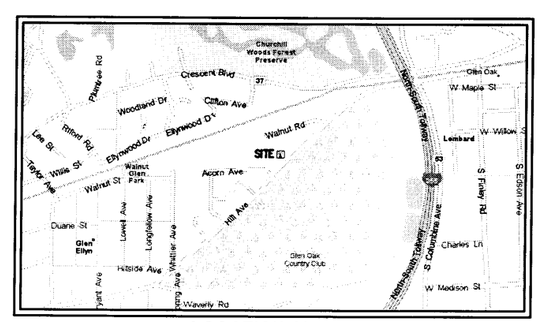

LOCATION MAP

EXISTING AMCI LEASE SITE DESCRIPTION
A PARCEL OF LAND FOR AMCI LEASE SITE PURPOSES LOCATED WITHIN HEREON SAID LOT 1 IN HILL OAK SUBDIVISION BEING A PART OF LOT 12 OF THE CHICAGO AND NORTHWESTERN RAILROAD RIGHT OF WAY IN ASSESSMENT DIVISION OF SECTION 12, TOWNSHIP 39 NORTH, RANGE 10, EAST OF THE THIRD PRINCIPAL MERIDIAN ACCORDING TO THE PLAT OF SAID HILL OAK SUBDIVISION RECORDED MAY 11, 1970 AS DOCUMENT R70-14300 AND CERTIFICATE OF CORRECTION, RECORDED MAY 21, 1970 AS DOCUMENT R70-15844.
BEGINNING AT A POINT OF INTERSECTION OF A LINE DRAWN 10.00 FEET WESTERLY OF THE EAST LINE OF SAID LOT 1 WITH A CURVED LINE DRAWN 15.00 FEET SOUTHERLY OF AND PARALLEL WITH THE NORTH LINE OF SAID LOT 1; THENCE SOUTH 05 DEGREES 06 MINUTES 42 SECONDS EAST PARALLEL WITH AND 10.00 FEET WESTERLY OF AS MEASURED PERPENDICULAR TO THE EAST LINE OF SAID LOT 1, A DISTANCE OF 54.00 FEET; THENCE SOUTH 84 DEGREES 53 MINUTES 18 SECONDS WEST, A DISTANCE OF 50.00 FEET; THENCE NORTH 05 DEGREES 06 MINUTES 42 SECONDS WEST, A DISTANCE OF 47.41 FEET; THENCE ALONG A NON-TANGENTIAL CURVE TO THE RIGHT HAVING A RADIUS OF 3306.38 FEET FOR A DISTANCE OF 50.43 FEET FORMING A CHORD BEARING OF NORTH 77 DEGREES 22 MINUTES 59 SECONDS EAST TO THE PLACE OF BEGINNING, CONTAINING 2538.55 SQUARE FEET ALL IN DuPAGE COUNTY, ILLINOIS.

EXISTING AMCI UTILITY EASEMENT DESCRIPTION
A PARCEL OF LAND FOR AMCI UTILITY PURPOSES LOCATED WITHIN HEREON SAID LOT 1 IN HILL OAK SUBDIVISION BEING A PART OF LOT 12 OF THE CHICAGO AND NORTHWESTERN RAILROAD RIGHT OF WAY IN ASSESSMENT DIVISION OF SECTION 12, TOWNSHIP 39 NORTH, RANGE 10, EAST OF THE THIRD PRINCIPAL MERIDIAN ACCORDING TO THE PLAT OF SAID HILL OAK SUBDIVISION RECORDED MAY 11, 1970 AS DOCUMENT R70-14300 AND CERTIFICATE OF CORRECTION, RECORDED MAY 21, 1970 AS DOCUMENT R70-15844.
COMMENCING AT A POINT OF INTERSECTION OF A LINE DRAWN 10.00 FEET WESTERLY OF THE EAST LINE OF SAID LOT 1 WITH A CURVED LINE DRAWN 15.00 FEET SOUTHERLY OF AND PARALLEL WITH THE NORTH LINE OF SAID LOT 1; THENCE SOUTHEASTERLY ALONG SAID CURVE TO THE LEFT HAVING A RADIUS OF 3306.38 FEET FOR A DISTANCE OF 23.42 FEET FOR A POINT OF BEGINNING; THENCE CONTAINING ALONG SAID ARC OF A CURVE TO THE LEFT FOR A DISTANCE OF 5.00 FEET; THENCE NORTH 12 DEGREES 37 MINUTES 01 SECONDS WEST, A DISTANCE OF 5.88 FEET; THENCE NORTH 77 DEGREES 22 MINUTES 59 SECONDS EAST, A DISTANCE OF 5.00 FEET; THENCE SOUTH 12 DEGREES 37 MINUTES 01 SECONDS EAST, A DISTANCE OF 5.88 FEET TO THE PLACE OF BEGINNING, CONTAINING 29.38 SQUARE FEET ALL IN DuPAGE COUNTY, ILLINOIS.

EXISTING AMCI ACCESS EASEMENT DESCRIPTION
COMMENCING AT THE SOUTHWEST CORNER OF SAID LOT 1; THENCE NORTH 48 DEGREES 20 MINUTES 50 SECONDS EAST ALONG THE SOUTHERLY LINE OF SAID LOT 1, A DISTANCE OF 13.53 FEET FOR A PLACE OF BEGINNING; THENCE CONTINUING ALONG THE PROLONGATION OF THE LAST DESCRIBED COURSE, A DISTANCE OF 12.01 FEET; THENCE NORTH 39 DEGREES 08 MINUTES 00 SECONDS WEST, A DISTANCE OF 61.24 FEET; THENCE NORTH 10 DEGREES 02 MINUTES 08 SECONDS WEST, A DISTANCE OF 93.72 FEET; THENCE NORTH 56 DEGREES 18 MINUTES 32 SECONDS EAST, A DISTANCE OF 44.49 FEET; THENCE NORTH 84 DEGREES 53 MINUTES 18 SECONDS EAST, A DISTANCE OF 59.49 FEET; THENCE NORTH 05 DEGREES 06 MINUTES 42 SECONDS WEST, A DISTANCE OF 12.00 FEET; THENCE SOUTH 84 DEGREES 53 MINUTES 18 SECONDS WEST, A DISTANCE OF 50.00 FEET; THENCE NORTH 05 DEGREES 06 MINUTES 42 SECONDS WEST, A DISTANCE OF 20.00 FEET; THENCE SOUTH 84 DEGREES 53 MINUTES 18 SECONDS WEST, A DISTANCE OF 12.00 FEET; THENCE SOUTH 05 DEGREES 06 MINUTES 42 SECONDS EAST, A DISTANCE OF 19.70 FEET; THENCE SOUTH 56 DEGREES 18 MINUTES 32 SECONDS WEST, A DISTANCE OF 56.01 FEET; THENCE SOUTH 10 DEGREES 02 MINUTES 08 SECONDS EAST, A DISTANCE OF 104.68 FEET; THENCE SOUTH 39 DEGREES 08 MINUTES 00 SECONDS EAST, A DISTANCE OF 64.87 FEET TO THE PLACE OF BEGINNING, CONTAINING 3518.59 SQUARE FEET ALL IN DuPAGE COUNTY, ILLINOIS.

NOTES:

1. BENCHMARK — SOUTHEAST CORNER OF THE CONCRETE PAD AT THE ENTRANCE TO THE EXISTING EQUIPMENT SHELTER. ELEVATION=696.12'
2. PERMANENT INDEX NUMBER - 05-12-207-033
3. LATITUDE: N 41°52'50.17" (NAD83) LONGITUDE: W 088°02'16.85" (NAD83)
4. THE LOCATION OF UNDERGROUND UTILITIES WAS DETERMINED BY FIELD OBSERVATION AND VISIBLE MARKINGS ONLY.
5. FIELD COMPLETED ON 5/31/05
6. THIS SURVEY WAS PREPARED FOR THE INSTALLATION OF WIRELESS COMMUNICATION EQUIPMENT ONLY.
7. THIS SURVEY WAS PREPARED WITHOUT THE AID OF A TITLE COMMITMENT. PLEASE REFER TO A CURRENT TITLE FOR ANY EASEMENTS, SETBACKS OR RESTRICTIONS NOT SHOWN HEREON.

LEGEND

PROPERTY LINE
CENTER LINE
EASEMENT LINE
BUILDING SETBACK
MEASURED DATA
RECORD DATA
CALCULATED DATA
CONCRETE
ENERGREEN\STAND. TREE
SHRUB
MONITOR WELL
GAS VALVE
TYPICAL SIGN
FLARED END SECTION
CLOSED MANHOLE
OPEN GRATE MANHOLE
BEEHIVE GRATE MANHOLE
GUTTER FRAME
VALVE VAULT
FIRE HYDRANT
S-BOX / SERVICE VALVE
POST LIGHT, GROUND LIGHT
AREA LIGHT
STREET LIGHT
TRAFFIC SIGNAL
POLE ARM SIGNAL
MANHOLE (electric\traffic)
GAS METER
ELECTRIC METER
PEDESTAL(telephone, electric, cable)
UTILITY POLE
TELEPHONE VAULT
GUARDRAIL
GUY WIRE ANCHOR
CONTOUR LINE
TREE LINE / HEDGE LINE
EDGE GRAVEL/STONE
FENCE LINE
STORM SEWER
SANITARY SEWER
COMBO SEWER
WATER SERVICE LINE
WATERMAIN
OVERHEAD ELEC. LINE
OVERHEAD TELECO LINE
GAS LINE
U.G. TELECO LINE
U.G. ELECTRIC LINE
UTILITY MARKOUT (WATER, GAS, ELEC, ETC.)

W-T LAND SURVEYING, INC.
LAND AND CONSTRUCTION SURVEYORS
39 EAST SCULLY DRIVE
SCHAUMBURG, ILLINOIS 60193
PH. (847) 895-3640 FAX. (847) 895-1854
IL. LICENSE NO. 184-001108 EXPIRES 4/30/07

STATE OF ILLINOIS)
COUNTY OF COOK)

WE W-T LAND SURVEYING, INC. DO HEREBY DECLARE THAT WE HAVE SURVEYED THE ABOVE DESCRIBED LEASE AREA AND THAT THIS PLAT IS A CORRECT REPRESENTATION OF SAID SURVEY.

GIVEN UNDER OUR HAND AND SEAL THIS 7th DAY OF JUNE A.D. 2005. AT SCHAUMBURG, ILLINOIS.

W-T LAND SURVEYING, INC.

ILLINOIS PROFESSIONAL DESIGN FIRM LICENSE NO. 184-001108

ILLINOIS PROFESSIONAL LAND SURVEYOR 35-3556 SCHAUMBURG ILLINOIS STATE OF ILLINOIS

Crown Castle USA Inc.
Great Lakes Area

9450 W. Bryn Mawr Avenue
Suite 340
Rosemont IL 60018

APPROVALS
LANDLORD
LEASING
R.F. DESIGN
ZONING
CONSTRUCTION
CONSTRUCTION
CELL SITE ENG.
OPERATION

DRAWINGS PREPARED FOR:

W-T COMMUNICATION DESIGN GROUP, LLC
2500 W. HIGGINS RD., SUITE 965
HOFFMAN ESTATES, IL 60195
PH. (847) 490-8275 FAX. (847) 895-9985
WWW.WTENGINEERING.COM

PROJECT NO:	805154
DRAWN BY:	KCB/MWO
CHECKED BY:	FIM
FIELD WORK BY:	BSA

#817173
LOMBARD 2
21 W 180 HILL AVENUE
GLEN ELLYN, ILLINOIS

SHEET TITLE
LAND SURVEY

SHEET NUMBER
LS-1

COPYRIGHT © 2005 W-T LAND SURVEYING, INC.

NOTICE OF PUBLIC HEARING

Tony Phillips and Ariel Stouder of Fullerton Engineering Consultants, LCC, on behalf of DISH Wireless LLC and OBO Crown Castle USA Inc., are requesting approval of a Special Use Permit in accordance with Sections 10-4-19(E)-3 and 10-8-7 of the Zoning Code to allow an addition of DISH Wireless 5G capable antennas and support equipment to the existing cellular tower at 1102 Hill Avenue. The Glen Ellyn Plan Commission heard this case on December 8, 2022 and will conduct a second public hearing to consider the Special Use Permit on **Thursday, March 9, 2023, at 7:00 p.m.** in the Galligan Board Room on the 3rd floor of the Glen Ellyn Civic Center, 535 Duane Street, Glen Ellyn, Illinois, 60137.

The property is located in the I1- Light Industrial District and legally described as follows:

A PARCEL OF LAND FOR AMCI LEASE SITE PURPOSES LOCATED WITHIN HERON SAID LOT 1 IN HLL OAKSUBDIVISION BEING A PARK OF LOT 12 OF THE CHICAGO AND NORTHWESTERN RAILROAD RIGHT OF WAY IN ASSESSMENT DIVISION OF SECTION 12, TOWNSHIP 39 NORTH RANGE 10, EAST OF THE THIRD PRINCIPAL MERIDIAN ACCORDING TO THE PLAY OF SAID HILL OAK SUBDIVISION RECORDED May 11, 1970 AS DOCUMENT R70-14300 AND CERTIFICATE OF CORRECTION, RECORED MAY 21, 1970 AS DOCUMENT R70-15844.

BEGINNING AT A POINT OF INTERSECTION OF A LINE DRAWN 10.00 FEET WESTERLY OF THE EAST LINE OF SAID LOT 1 WITH A CURVED LINE DRAWN 15.00 FEET SOUTHERLY OF AND PARALLEL WITH THE NORTH LINE OF SAID LOT 1; THENCE SOUTH 05 DEGREES 06 MINUTES 42 SECONDS EAST PARALLEL WITH AND 10.00 FEET WESTERLY OF AS MEASURED PERPENDICULAR TO THE EAST LINE OF SAID LOT 1, A DISTANCE OF 54.00 FEET; THENCE SOUTH 84 DEGREES 53 MINUTES 18 SECONDS WEST, A DISTANCE OF 50.00 FEET; THENCE NORTH 05 DEGREES 06 MINUTES 42 SECONDS WEST, A DISTANCE OF 47.41 FEET; THENCE ALONG A NON-TANGENTIAL CURVE TO THE RIGHT HAVING A RADIUS OF 3306.38 FEET FOR A DISTANCE OF 50.43 FEET FORMING A CHORD BEARING OF NORTH 77 DEGREES 22 MINUTES 59 SECONDS EAST TO THE PLACE OF BEGINNIG, CONTAINING 2538.55 SQUARE FEET ALL IN DUPAGE COUNTY, ILLINOIS.

P.I.N. 05-12-207-033

All persons who are interested are invited to attend the public hearing of the Plan Commission to listen and be heard. Information related to the request, including the plans for the proposed project are available for public review at any time before or after the meeting between the hours of 8:00am and 4:30pm in the Community Development Department of the Civic Center, 535 Duane Street, Glen Ellyn, Illinois. Questions related to the request should be directed to Atrian Fard, Senior Planner, afard@glenellyn.org. All public comments received by 4:30 pm on Thursday, March 9, 2023 will be read into the record at the public hearing.

Village of Glen Ellyn

1102 Hill Ave Notification

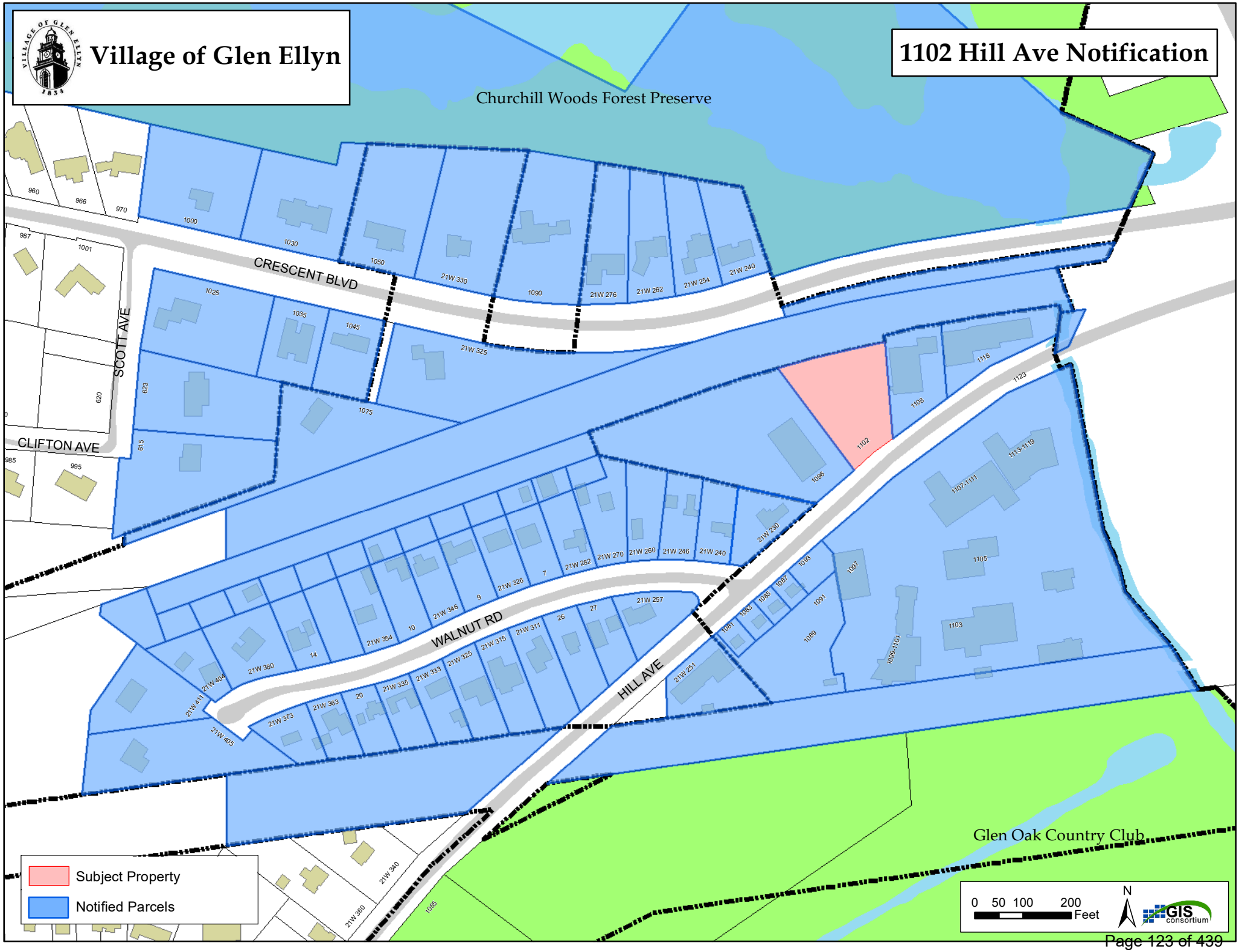

9045 River Rd,
Indianapolis, IN 46240

Phone: (317) 249-2028
www.crowncastle.com

February 2, 2023

IL – Glen Ellyn
Village of Glen Ellyn
Community Development Department
535 Duane Street
Glen Ellyn, IL 60137

Via Mail

************NOTICE OF ELIGIBLE FACILITIES REQUEST************

RE: Request for Minor Modification to Existing Wireless Facility – Section 6409
Site Address: 21 W 180 Hill Avenue, Glen Ellyn, IL 60137S
Crown Site Number: 817173 / Crown Site Name: IL-CCI-T-817173
Customer Site Number: CHCHI00652A / Application Number: 570902

Dear Staff:

On behalf of DISH Wireless L.L.C. (”Dish Wireless” or “Applicant”), Crown Castle USA Inc. (“Crown Castle”) is pleased to submit this request to modify the existing wireless facility noted above through the collocation, replacement and/or removal of the Applicant’s equipment as an eligible facilities request for a minor modification under Section 6409[1] and the rules of the Federal Communications Commission (“FCC”).[2]

Section 6409 mandates that state and local governments must approve any eligible facilities request for the modification of an existing wireless tower or base station that does not substantially change the physical dimensions of such tower or base station. Under Section 6409, to toll the review period, if the reviewing authority determines that the application is incomplete, it must provide written notice to the applicant within 30 days, which clearly and specifically delineates all missing documents or information reasonably related to whether the request meets the federal requirements.[3] Additionally, if a state or local government, fails to issue any approvals required for this request within 60 days, these approvals are deemed granted. The FCC has clarified that the 30-day and 60-day deadlines begins when an applicant: (1) takes the first step required under state or local law; and (2) submits information sufficient to inform the jurisdiction that this modification qualifies under the federal law[4]. Please note that with the submission of this letter and enclosed items, the thirty and sixty-day review periods have started. Based on the May 26th 2022 submission, the deadline for written notice of incomplete application was Monday June 28, 2022. Notification of an incomplete application was received on June 7th, 2022. Confirmation of a completed application to be added to the Village of Glen Ellyn Planning Commission was received on November 2, 2022. The updated timeline on the deadline for issuance of approval was December 20, 2022.

[1] Middle Class Tax Relief and Job Creation Act of 2012, Pub. L. No. 112-96, § 6409 (2012) (codified at 47 U.S.C. § 1455).
[2] *Acceleration of Broadband Deployment by Improving Wireless Facility Siting Policies*, 29 FCC Rcd. 12865 (2014) (codified at 47 CFR § 1.6100); and *Implementation of State & Local Governments’ Obligation to Approve Certain Wireless Facility Modification Requests Under Section 6409(a) of the Spectrum Act of 2012*, WT Docket No. 19-250 (June 10, 2020).
[3] *See* 47 CFR § 1.6100 (c)(3). [4] *See* 2020 Upgrade Order at paragraph 16.

9045 River Rd,
Indianapolis, IN 46240

Phone: (317) 249-2028
www.crowncastle.com

The proposed scope of work for this project includes:
Collocation of antennas, ancillary equipment, and ground equipment as per plans for a new carrier on an existing wireless communication facility.

At the end of this letter is an updated checklist, as of February 1, 2023, of the applicable substantial change criteria under Section 6409. Additionally, please find enclosed the following information in support of this request:

(1) Special Use Permit Application;
(2) Existing Plat of Survey;
(3) $750.00 Non-Refundable Application Fee;
(4) $1,000.00 Escrow;
(5) Proof of Ownership;
(6) RF Statement from DISH RF Engineer;
(7) Construction Drawings;
(8) Structural Analysis; and
(9) Section 6409 Substantial Change Checklist.

As these documents indicate, (i) the modification involves the collocation, removal or replacement of transmission equipment; and (ii) such modification will not substantially change the physical dimensions of such tower or base station. As such, it is an "eligible facilities request" as defined in the FCC's rules to which the 60-day deadline for approval applies. Accordingly, Applicant requests all authorization necessary for this proposed minor modification under Section 6409.

Our goal is to work with you to obtain approvals earlier than the deadline. We will respond promptly to any request for related information you may have in connection with this request. Please let us know how we can work with you to expedite the approval process. We look forward to working with you on this important project, which will improve wireless telecommunication services in your community using collocation on existing infrastructure. If you have any questions, please do not hesitate to contact me.

Regards,

Crown Castle
Agent for Applicant

9045 River Rd,
Indianapolis, IN 46240

Phone: (317) 249-2028
www.crowncastle.com

Section 6409 Substantial Change Checklist
Towers Outside of the Public Right of Way

The Federal Communications Commission has determined that a modification substantially changes the physical dimension of a wireless tower or base station under 47 U.S.C. § 1455(a) if it meets one of six enumerated criteria under 47 C.F.R. § 1.6100.

Criteria for Towers Outside the Public Rights of Way

YES/NO **NO**	Does the modification increase the height of the tower by more than the greater of: (a) 10% (b) or, the height of an additional antenna array plus separation of up to 20 feet from the top of the nearest existing antenna?
YES/NO **NO**	Does the modification add an appurtenance to the body of the tower that would protrude from the edge of the tower more than 20 feet or more than the width of the tower structure at the level of the appurtenance, whichever is greater?
YES/NO **NO**	Does the modification involve the installation of more than the standard number of new equipment cabinets for the technology involved or add more than four new equipment cabinets?
YES/NO **NO**	Does the modification entail any excavation or deployment outside the current site by more than 30 feet in any direction, not including any access or utility easements?
YES/NO **NO**	Does the modification defeat the concealment elements of the eligible support structure?
YES/NO **NO**	Does the modification violate conditions associated with the siting approval with the prior approval the tower or base station other than as specified in 47 C.F.R. § 1.6100(c)(7)(i) – (iv)?

If all questions in the above section are answered "NO," then the modification does not constitute a substantial change to the existing tower under 47 C.F.R. § 1.6100.

3025 Highland Pkwy ySuite 510
Downers Grove, IL 60515

Phone: (630) 480-5164
www.crowncastle.com

February 2, 2023

Village of Glen Ellyn
Community Development Department
535 Duane Street
Glen Ellyn, IL 60137

Re: Narrative on 5G Concerns for Special Use Permit to allow the Installation and Operation of New DISH Wireless
Network Equipment to the Existing Tower at 1102 Hill Avenue
DISH Site CHCHI00652A / Crown Site 817173

To Whom It May Concern,

Fullerton Engineering on behalf of DISH Wireless, and Tower Owner Crown Castle, submit for review and approval, a Special Use Application for the proposed addition of DISH Wireless Antennas and Support Equipment to the tower at 1102 Hill Avenue. DISH Wireless is proposing to install their telecommunication equipment on the tower and on the ground within a leased space. Crown Castle is the owner of the telecommunications tower located at this referenced tower location. Currently, there are no carriers operating on this tower.

DISH Wireless would install their equipment on the top tower space for operation. This centerline for installation is located on the tower at the 67' high mark. The antenna equipment that DISH is proposing to install on the tower would support 5G technology. This is a key offering that their network would provide to their consumers. The proposed new Co-location of DISH antennas does not present any detrimental effect to the community public safety, health and/or welfare. Even with the 5G capable technology that the equipment would bring to the community.

DISH Wireless is a division of the company we all know to be the satellite television provider. In recent years, DISH has become one of the major wireless carriers. Their focus will be providing 5G wireless connectivity to power the Smart Cities of the future. Smart Homes, Factories, Driverless Cars, and Artificial Intelligence...in addition to the millions of wearables, sensors, devices, and robots that will support them. Additional information regarding the DISH Story is available on their web site at https://about.dish.com/company-info.

Wireless Communications have been designated Critical Infrastructure by the Federal Government and should be considered Essential Services in all Comprehensive Plans. Adding a New Carrier to an existing wireless support structure in the Industrial Zoning District should be considered at the top of a site hierarchy.

CROWN CASTLE

3025 Highland Pkwy ySuite 510
Downers Grove, IL 60515

Phone: (630) 480-5164
www.crowncastle.com

As DISH Wireless is constructing this new network, every new facility in the network is essential to the seamless operation. This Crown Castle tower, located at 1102 Hill Avenue, was selected to fill a gap in the DISH Wireless network. The tower height and location are important factors in determining how network coverage can be expanded. Structure height is key in extending that coverage. The higher the structure the farther the coverage will extend.

On the Crown Castle tower, DISH Wireless would be installing their antennas, radio equipment, and associated cabling at top location on the tower. At the base of the tower, within the fenced compound area, DISH would install an ice bridge, a 5' x 7' metal platform, and an equipment cabinet. The proposed addition of DISH Wireless's equipment will not cause an increase in the height of the tower or in the existing leased ground space.

The new antenna equipment would support 5G technology. This would be in addition to other technologies that would the DISH network would offer to consumers. As an example, another technology supported by this antenna would be 4G. There is no hazard emission that is produced from the use of 5G technology. Consumers would only be able to utilize this 5G network if they should purchase a cellular device that has 5G capable technologies. The only way any individual would come to harm is if they were to stand directly in front of antenna located at the top of the tower. Which is why warning signs are posted in all telecommunication site entrances for safety.

Submitted with the Special Use Permit Application, we have included a radio frequency interference statement provided by DISH RF Engineers confirming that all frequencies utilized by DISH Wireless will follow guidelines enforced by the Federal Communications Commission. This is further confirmation the proposed new Co-location of DISH antennas does not present any detrimental effect to the community public safety, health and/or welfare. Even with the 5G technology capability provided by the new antennas.

It is also worth mentioning that the antenna equipment DISH Wireless is utilizing would be of similar make and models that other carriers are installing on their telecommunication towers to support their network. As technology improves for cellular networks there will always be the need for future equipment upgrades to DISH Wireless's network. This need would be the same for any carrier in the cellular market.

In the coming years, DISH Wireless will continue to expand their network. As mentioned previously, every new facility in the DISH network is essential to the seamless operation of this new network. This Crown Castle tower, located at 1102 Hill Avenue, was selected to fill a gap in the DISH Wireless network.

3025 Highland Pkwy ySuite 510
Downers Grove, IL 60515

Phone: (630) 480-5164
www.crowncastle.com

The proposed addition of the DISH Wireless equipment at this location, even with the 5G technology offered by the antennas, this tower will not be hazardous to the community surrounding this property. As confirmed in the radio frequency statement provided by the DISH RF Engineering Manager, DISH Wireless shall comply with all FCC rules regarding interference to other radio services and human exposure to radio frequency energy.

If there are still any outstanding questions or concerns, please feel free to reach out using any of my contact information listed below in my signature. Addressing all concerns for this project is of utmost importance to myself, and Crown Castle.

Best regards,

Ariel Stouder
Senior Zoning and Permitting Specialist
Fullerton Engineering, on behalf of Crown Castle
M: 574-849-8420
Email: astouder@fullertonengineering.com

MSA *MUNICIPAL SERVICES ASSOCIATES, INC.*

April 25, 2023

Mr. Marty Scott, AICP
Director of Community Development
Village of Glen Ellyn
535 Duane Street
Glen Ellyn, Illinois 60137

Dear Marty:

At the direction of the Village of Glen Ellyn, Municipal Services Associates, Inc. (MSA) has reviewed the plan submitted by Crown Castle ("Crown Castle") on behalf of Dish Wireless ("Dish") for installation of an antenna array including antenna and radio equipment, a base station platform and base station, and cabling on a monopole tower. Upon approval, the project will be the first of two Dish cell sites in Glen Ellyn.

The project consists of installation of a new antenna array platform beneath the top of a monopole tower with a height of 70' (21.34 meters) above ground level (AGL). The tower is located at 1102 Hill Street behind an industrial building. The monopole tower antenna array platform will include the removal of an abandoned antenna array platform and installation of a new antenna array platform, three (3) new antenna panels, six (6) Fujitsu Remote Radio Units (RRUs), and a cable over-voltage protection box(COVP). The proposed project also includes construction of a steel platform measuring 5' (1.53meters) x 7' (2.13 meters). The base station will include an equipment cabinet with a power protective cabinet, H-Frame mounting posts, a fiber network interface box, a telephone-fiber connection box, a safety switch, a GPS antenna, various cables and conduits for power and fiber connections, a 200-AMP meter socket, a fiber network interface device (NID), if needed, and an ice bridge. Details of the project and the recommendations of MSA are described below.

Existing Facilities: There are an abandoned antenna array platform and vacant antennas currently located at the top of the monopole tower at 67' (20.43 meters) AGL. Dish proposes to remove the antenna array platform and antennas. There are no other telecommunications facilities on the monopole tower. There is an abandoned equipment shelter building on the ground space, however, Dish does not intend to utilize it, and Dish will construct its own base station platform adjacent to the building.

3 Golf Center, # 311 ● Hoffman Estates, Illinois 60169
TEL-847-882-7773 FAX-847-310-9275 MOBILE-847-867-6117
E-Mail: MSASchapman@cs.com
www.msatelecom.com

FCC 2014 Authorization Order "Shot Clock" Period of Review: Crown Castle submitted their most recent application for permit to the Village on February 2, 2023. Crown Castle sent additional information regarding the status of the tower standards under the National Environmental Policy Act (NEPA) on March 2, 2023. It is unclear as to when the NEPA information was requested by the Village, and the earliest date that Crown Castle's Special Use Permit application could be considered by the Village's Plan Commission was April 27, 2023. Crown Castle and the Village are proceeding as if the "Shot Clock" has not yet expired.

The cell site is a completely new project subject to FCC promulgated rules and regulations related to Section 332(c)(7)(ii) of the Telecommunications Act of 1996. There are substantial construction activities proposed for this project, and the carrier is installing an antenna array on this site for the first time. The existing tower requires a Special Use Permit due to its location in an industrial zoning district (I-1). Other than issuance of required building permits, MSA recommends no additional action from the Village.

Proposed Project

Dish Wireless is proposing to install a new antenna array on the existing monopole tower at 1102 Hill Avenue. Additionally, Dish is proposing construction of a base station platform and ice bridge that is stationed immediately east of the monopole tower.

Dish plans to install a platform capable of accommodating up to nine (9) antenna panels, although only three (3) antenna panels are proposed for initial installation. The plans that Dish submitted propose installation of three (3) JMA Wireless 5G antenna panels, six (6) Fujitsu Open Radio Access Network (O-RAN) radios, and a Raycap Cable Over-Voltage Protection (COVP) surge arrester to be mounted at a centerline height of 65' (19.82 meters).

The new antenna panels will carry five (5) frequency ranges: 617-698 MegaHertz (MHz), 698-894 MHz, 1.695-1.880 GigaHertz (GHz), 1.850-1.990 GHz, and 1.920-2.200 GHz. All five frequency bands support low-band and mid-band 5G service, and these ranges will provide significant channel capacity for voice, video, and data transmission and reception, while allowing for growth as more users subscribe to Dish's cellular service. Additionally, the JMA Wireless antennas are Massive Multiple Input/Multiple Output ("Massive MIMO") antennas. These antennas have technology that substantially increases the number of available channels needed to deliver faster speeds and data capacity. Massive MIMO antennas such as the JMA Wireless antennas, allow "Beamforming," which is the targeting of signals to specific user devices. Beamforming reduces interference and provides greater signal integrity.

Two (2) Fujitsu RRUs will be mounted to the rear of each antenna panel. A total of six (6) RRUs will be installed. The RRUs will be low-band and mid-band units that will be attached to the antenna array platform adjacent to each antenna panel. Dish also proposes installation of a Raycap cable over-voltage protection box (COVP) that will be attached directly to the monopole tower in the center of the array near the northeast section of the array platform. The COVP box is intended to act as a surge arrester that will protect coaxial, power and fiber cables serving the antenna panels and radios.

The antenna array will consist of a six (6)-sided platform comprising upper and lower frames. The lower frame will include three (3) mesh panels that serve as a floor for the platform. The upper frame will serve as a handrail and a support mount for the antennas and radios. Three (3) mounting posts on each of three (3) longer sides of the array platform will connect the upper and lower frames.

Power cable will be extended to Dish's proposed cell site. A 20' (6.10 meters) underground conduit pipe and power cable will connect a ComEd transformer located on a utility pole, to a power meter and a 200-AMP meter socket on the base station platform. The power cable will also be connected to Dish's power protective cabinet (PPC) with a power disconnection switch.

Fiber cabling serving the antenna array would be buried in the same conduit as the power cable for a distance of 20' (6.10 meters) in a trench at a depth of 30" (9.15 meters)to the base station. The fiber cable will be connected to a fiber/telephone enclosure and, if needed, a fiber network interface device (NID).

From the NID or fiber/telephone enclosure, the fiber optic cable, along with the power cable, will intersect at the base station COVP box, and merge into a single hybrid fiber optic/power cable. From the COVP box, a 100' (30.49 meters) segment of hybrid fiber optic/power cable will extend from the PPC, across the ice bridge, and through the interior of the tower to a tower-mounted COVP box, and then, by jumper cables, to the antennas and RRUs.

Dish proposes to lease a 5' (1.52 meters) by 7' (2.13 meters) parcel. The rectangular parcel is immediately east of the monopole tower, and it will be used for Dish's base station and base station platform. The platform will accommodate base station cabinets and a unistrut H-Frame mount for the PPC, the fiber/telephone enclosure, fiber NID, battery cabinet, and Internet distribution boxes. A proposed ice bridge measuring 8.0' (2.44 meters) in length by 1.0' (.305 meters) in width will connect the base station with the monopole tower.

Project Purpose

The proposed project is intended to substantially increase 5G signal capacity and speed for the eastern and northeastern sections of the Village. These areas include an industrial park, Glen Oak Country Club, the I-355 corridor from North Avenue to Roosevelt Road, the Ellynwood Forest Preserve Churchill Woods Forest Preserve, and Walnut Glen Park, Glenbard West High School, Benjamin Franklin Elementary School and residential areas to the west of the proposed cell site, and the east side of downtown Glen Ellyn. The new antennas and radios will enhance the ability of the cell site to handle additional traffic carrying voice, video, and data. The new installation will provide Dish Wireless subscribers with high signal speeds using low-band and mid-band frequency blocks.

This cell site's coverage area includes the east and northeast sections of the Village, and the south-western section of Lombard. Dish Wireless subscribers would include industrial buildings, parks, schools, local single family home occupants and apartment dwellers, and motorists using I-355, Hill Avenue, Crescent Boulevard, Avenue, Roosevelt Road, and residential streets. Additionally, the antennas will allow for targeting signals to and from individual users, which will allow for more efficient use of signal resources. Within the range of this cell site are not only industrial and business, and residential users, there are also users in the fields of recreation and education. All of them are using high-speed wireless services in some form. The new cell site will enable 5G services to new Dish Wireless users.

Growing demand from business, industrial, residential, and recreational uses requires substantial bandwidth resources to provide higher data speeds and signal processing capacity. The 617-894 Megahertz (MHz), and 1.695-2.200 Gigahertz (GHz) bandwidth levels proposed by Dish will enable communications on 5G-capable devices and provide a platform for high-speed wireless streaming that will allow real-time transmission of television, movies, games, and other video applications transmitted over Dish's wireless network.

The new cell site is important for Dish to keep up with ever growing demand for wireless connectivity to Internet-of-Things (IoT) equipment and applications as they continue to increase their presence in the telecommunications marketplace. Wireless user demand for faster wireless speed and greater connectivity is ongoing. Besides IoT equipment, applications, connected vehicles, wireless devices and appliances, and wireless entertainment systems, demand for high-speed wireless service has spread throughout the local economy.

Project Description – Antenna Array

Dish proposes installation of new eight-pole antenna panels. An antenna panel will be installed on the three (3) longest sides of the six (6)-sided platform. The antennas will have a centerline in the center of the tower at 65' (19.82 meters) AGL.

The proposed antenna panels are manufactured by JMA Wireless. These panels measure 72.0" (1.83 meters) in height, 20.0" (.509 meters) in width, and 8.0" (.204 meters) in depth. With mounting brackets, the JMA panels have a weight of 82.5 lbs. (37.5 kilograms). The antenna panels are eight-pole units capable of receiving four (4) jumper cables for the 617-896 MHz bandwidth ranges, and four (4) jumper cables for the 1.695-2.200 GHz bandwidth ranges. There are also connections for Remote Electrical Tilt (RET) cables. Each new panel will be connected by clamp brackets to a new galvanized steel mounting pipe measuring 8' (2.44 meters) in height. The mounting pipes are connected to the antenna array frame. The Fujitsu radios will be connected to the mounting pipe immediately behind the antenna panels.

There are two (2) types of Fujitsu RRUs that will be connected to the antennas. The Fujitsu B604 RRU measures 14.9" (.379 meters) in height, 15.7" (.399 meters) in width, and 7.8" (.198 meters) in depth and each RRU weighs 63.9 lbs. (29.0 kilograms). The B604 RRUs operate at 1.695-2.200 GHz. The Fujitsu B605 RRU measures 14.9" (.379 meters) in height, 15.7" (.399 meters) in width, and 9.0" (.229 meters). Each B605 RRU weighs 74.9 lbs. (34.0 kilograms). The B605 RRUs operate at 617-894 MHz. Both types of Fujitsu radios carry low-band and mid-band 4G/LTE and 5G frequencies.

The RRUs will be connected to a mounting pipe located adjacent to its corresponding antenna panel. Eight (8) fiber jumper cables will be connected from the RRUs to each antenna panel. The antenna panels include a RET connection. The RRUs will be connected by a hybrid fiber cable to a cable over-voltage protection box (COVP) banded to the tower at the base of the mounting platform on the northeast corner of the center of the array platform. The COVP box measures 18.98" (.483 meters) in height, 14.39" (.366 meters) in width, and 8.15" (.207 meters) in depth. The COVP box has a weight of 21.8 pounds (9.91 kilograms). The tower-mounted COVP box will be connected to the equipment cabinet and power protective cabinet on the base station platform by a 100' (30.49 meters) hybrid fiber/power cable.

The antenna array proposed by Dish will consist of a six-sided platform floor containing triangular mesh support. The platform floor will be connected to the upper portion of the array. Three (3) vertical mounting posts will form a ring mount clamped to the monopole tower. The bottom and top of the array will be composed of two (2) sets of three (3) upper and lower horizontal bars measuring 8' (2.44 meters) in length which will hold the antennas and radios. The array frame can accommodate up to three (3) vertical bars on the Alpha (north), Beta (southeast), and Gamma (southwest) sides of the array frame.

The upper frame horizontal bars will serve as a handrail. The array frame comprises the three (3) horizontal bars measuring 96" (2.44 meters) and three (3) smaller bars measuring 40.4" (1.025 meters) that connect the horizontal bars at each end in order to create the six-sided platform. The lower and upper levels of the array frame have a separation of 41.25" (1.05 meters). Ring mounts that will connect the platform to the monopole tower will be mounted in the center of the platform and will be attached to the platform by three (3) struts measuring 55" (1.40 meters) apiece.

Project Description–Steel Platform and Base Station

As noted earlier in this report, Dish will lease a 5' (1.53 meters) by 7' (2.13 meters) rectangular space for its base station and base station platform. Within the leased space, Dish proposes to construct a steel platform with the same dimensions to accommodate its base station cabinets and H-Frame mount.

The base station will be located at a distance of approximately 8' (2.44 meters) from the monopole tower. The base station platform and surrounding area are proposed to include an ice bridge measuring 8' (2.44 meters) in length and 12" (.305 meters) in width. The ice bridge will be supported by three (3) sets of pipe columns measuring 9.5' (2.90 meters) in height, and spaced 9' (2.74 meters) apart. Wire support brackets and "Trapeze" kits intended to hold hybrid fiber/power cable spans using clamps, will be attached to the ice bridge columns and will also be spaced 9.0' (2.74 meters) apart. The ice bridge columns will be buried in concrete piers at a depth of 3.5' (1.07 meters).

The base station platform floor will measure 7.0' (2.13 meters) in length, 5.0' (1.53 meters) in width, and 9.0" (.229 meters) in depth, from the top of the floor to the bottom. The base station floor will be an open mesh surface supported by two (2) cross braces measuring 5.0' (1.53 meters) in length that are spaced 2.67' (.813 meters) apart. The platform will be mounted at grade on four (4) footpads and four (4) struts measuring 1.25' (.381 meters) in height.

The unistrut H-Frame mount will comprise the rear mounting points of the base station. The H-Frame is supported by two (2) posts that are 5.08' (1.55 meters) in height. The posts are connected by five (5) crossbars that are 5' (1.53 meters) in length, and spaced 1.16' (.354 meters) apart. The H-Frame will support the base station power protective cabinet, a fiber/telephone enclosure, radio frequency modules, a safety switch, and a GPS antenna.

The power protective cabinet located on the H-Frame measures 39" (.992 meters) in height, 22.85" (.582 meters) in width, and 12.59" (.320 meters) in depth. The power protective cabinet will weigh 80 pounds (36.4 kilograms). The Zayo 5RU fiber NID box measures 36.12" (.919 meters) in height, 29" (.739 meters) in width, and 12.90" (.328 meters) in depth. The NID box weighs 85 lbs. (38.6 kilograms).

An equipment cabinet will be located on the steel platform. The equipment cabinet will contain a telephone and fiber connection boxes, RF modules, and signal processing equipment. In addition, the cabinet contains a heater, and a -48 Volt, 600-AMP power system. The cabinet measures 73" (1.86 meters) in height, 30" (.763 meters) in width, and 32" (.814 meters) in depth. The cabinet, when empty, weighs 376 lbs. (170.9 kilograms). A GPS antenna is also proposed for installation on the northeast corner of the platform. The GPS antenna will be mounted on a 1.0' (.305 meters) mounting pipe.

The base station will also include a fiber telco enclosure box. The box measures 20" (.509 meters) in height, 20" (.509 meters) in width, and has a depth of 9" (.229 meters). The fiber telco box will be located beneath the fiber NID enclosure near the platform floor. The base station also contains a Square D safety switch box. The safety switch box is 29.25" (.744 meters) in height, 19" (.483 meters) in width, and 8.5" (.216 meters) in depth. The safety switch weighs 53.5 pounds (24.3 kilograms). A power meter socket will be attached to the Power Protection Cabinet (PPC). The meter socket is 16" (.407 meters) in height, 12" (.305 meters) in width, and is 6" (.153 meters) in depth. The power meter weighs 18 pounds (8.18 kilograms) and has a rating of 200 amps.

Grounding: Crown Castle and Dish provided a detailed grounding plan. Each new antenna panel mounting pipe, RRU, and the COVP box will be grounded to a sector ground buss bar using #2 stranded copper green insulated ground wire. The sector ground bars will be grounded to the antenna mount collar attached to the monopole tower. The antenna will be grounded to an existing tower ground ring at the base of the tower. The tower ground ring will be bonded to an ice bridge support post, and to the steel platform using #2 AWG solid copper conductors.

Dish will excavate around the perimeter of the base station platform to install a ground ring surrounding the base station platform. The ground ring will be buried in a trench with a depth of 30" (.763 meters) and a width of 1.0' (.305 meters). The ring will be #2 AWG solid bare tinned copper conductor ground wire. The ground ring will serve as a grounding point for base station equipment. The base of the platform and the PPC will be grounded to the ring by #2 copper tinned solid ground wire encased in separate conduit pipes. The ground wires will be exposed for between 3" (.076 meters) and 8" (.204 meters) from the cadweld termination point on the platform, and sheathed in conduit pipes for up to 24" (.610 meters) below grade.

The base station platform will include a buss bar that will serve as a grounding point for the GPS antenna, the power protective cabinet, the fiber NID, and the Telco-Fiber Enclosure. All grounds terminating at the buss bar will be #6 stranded and insulated ground wire, and the buss bar will be grounded to the ground ring using #2 AWG tinned solid copper ground wire. The H-Frame will also be grounded to a unistrut cross bar and to the ground ring with #2 AWG tinned solid copper ground wire.

The platform, base station, and existing tower ground ring will be grounded to the ground ring surrounding the base station platform and to four (4) ground rods. The ground rods are buried at a starting point 30" (.763 meters) below grade. Each ground rod is 8' (2.44 meters) long and buried beneath the 30" (.763 meters) point. The ground rods are located on the northeast, northwest, southwest, and southeast corners of the ground ring. A test well will be located at the northwest corner of the ground ring. Ice bridge support posts will be bonded to the ground ring by #2 AWG solid copper tinned wire surrounding the base station platform.

The grounding plan submitted by Crown Castle and Dish was acceptable.

Structural Evaluation: Dish provided a structural analysis prepared by Morrison Hershfield of Atlanta, Georgia, ("Morrison") on August 19, 2021. Morrison tested stress levels on the monopole tower using the proposed platform kit, antenna panels, RRUs, COVP box, and cabling, as load factors.

Tests were performed according to American National Standards Institute /Telecommunications Industry Association (ANSI/TIA) 222-H standards. The ANSI/TIA standards set tests using a basic wind speed of 115-MPH, with no ice, a basic wind speed of 40-MPH with 1.5" of ice, ice density of 56 pounds per square foot, a service wind speed of 60-MPH, and a deflection wind speed of 60-MPH.

Results of the analysis found that the level of the monopole tower where the proposed project is to be located passed section capacity, wind speed, and ice load tests, and that stress capacity at the center of the tower also passed. Morrison assigned a maximum structure rating of 60.1%. Morrison also rated anchor rods capacity at 60.1%, a base plate rating of 28.7%, the base foundation (structure) rating of 31.8% and a soil interaction foundation rating of 55.9%. Morrison also calculated a section capacity rating summary of 46.8%(1). Based on its ratings, Morrison opined that "**Once the equipment in Table 2 is removed**, the tower and its foundation have sufficient capacity to carry the proposed load configuration. No modifications are required at this time."(2) The equipment that Morrison refers to in Table 2 of the structural analysis is the abandoned antenna array platform that is proposed for removal by Dish.

It should be noted that a higher rating indicates that less structural capacity exists for loads created by one or more antenna arrays and associated cabling and equipment. In this instance, the rating is considerably lower than the maximum rating (105%) that would indicate that no additional capacity exists for proposed equipment.

The structural evaluation is acceptable and is attached.

Requested Information of Applicant: The Village Community Devclopment Department requested additional information regarding NEPA compliance on February 2, 2023. Fullerton Engineering Inc., and Crown Castle provided this information on March 2, 2023. Municipal Services Associates, Inc. reviewed the plans submitted by Dish and Crown Castle on April 20, 2023 and determined that the application was complete and that no additional information would be requested from Dish or Crown Castle.

---

(1)Morrison Hershfield, Structural Analysis Report, Site No. CHCHI00652A, Project Number 1981651, August 19, 2021, at 4, 6, 15, 18, and 19.
(2) *Ibid*, at 4.

FCC OET Bulletin 65 Appendix A Checklist and Radio Frequency Emissions Safety Compliance: The FCC completely occupies the field as to setting RF safety standards in the United States. The Village is not permitted to set its own standards regardless of whether higher, lower, or even the same as the FCC's standards. The Commission derives its authority under a provision of the National Environmental Policy Act (NEPA) of 1969. The Commission permits the Village to determine if a proposed wireless project meets the required FCC 47 CFR § 1.1307 et seq. (the "FCC rules") and FCC Office of Engineering and Technology Bulletin 65 ("OET 65") RF safety requirements.

The actual standards set by the Commission are found in the FCC Office of Engineering and Technology Bulletin 65, titled "Evaluating Compliance with FCC Guidelines for Human Exposure to Radiofrequency Electromagnetic Fields." A website containing the bulletin is at http://www.fcc.gov/Bureaus/Engineering_Technology/Documents/bulletins/oet65/oet65.pdf.

Under the FCC rules, certain types of wireless projects are deemed to be "categorically excluded," thus not subject to further RF evaluation under the rules due to identified factors including: whether the antenna supporting structure is a building or is shared to perform some other function, and the lowest portion of the transmitting antenna is at least 10 meters (32.8 feet) above ground.

Dish provided a completed FCC OET Bulletin 65 Appendix A checklist. As the proposed project will be operated as a Broadband Personal Communications Services, and that the lowest point of the antenna array will be located at 62' (18.90 meters), a point that is 29.2' (8.90 meters) above the threshold ceiling for regulation of RF exposure. The proposed project qualifies for categorical exclusion under the FCC rules because the lowest point of each transmitting antenna is greater than 10 meters above ground.

Additionally, Dish has proposed installation of Notice, Caution, Warning and Information signage at the cell site. This signage is required by the FCC in the event that the antennas exceed the Maximum Permitted Emissions (MPE) standards established by the FCC. Although the antenna specifications indicate that the Effective Isotropic Radiated Power (EIRP) wattage level is less than the FCC MPE standard, Dish proposes to post this signage as a preventive measure.

The use of panel antennas and other forms of wireless telecommunications creates a concern that radio frequencies used by cellular and wireless providers might interfere with radio frequencies used for local government public safety and public services communications. Dish Wireless and other wireless providers may be using a radio frequency spectrum that had been previously used for analog television transmission. Other frequencies formerly used for television transmission will be allocated by the FCC to local governments for public safety uses.

To address this concern, Crown Castle and Dish Wireless was requested to provide a "Good faith efforts" statement concerning radio frequency interference. Crown Castle provided this statement which said:

"DISH shall comply with all FCC rules regarding interference to other radio services and human exposure to radio frequency energy. In the unlikely event that interference does occur, DISH agrees to fully cooperate with the entity experiencing interference to identify and correct, to the extent reasonably possible, any issues caused by the DISH installation."

Section 6409(a) - Spectrum Act - Evaluation:

MSA has reviewed the Crown Castle and Dish Wireless application for the following scope of work at 1102 Hill Avenue, and located in the Village of Glen Ellyn stated on pages two and three of this report, and has reviewed the proposed project and plans in light of Section 6409(a), also known as the "Spectrum Act," contained within the Middle Class Tax Relief and Job Creation Act of 2012. (P.L. 112-96 enacted February 22, 2012). Section 6409(a), codified at 47 CFR §1.6100, addresses mandatory collocations at existing wireless towers and base stations, facially eliminating local discretion in connection with collocation projects.

In the definition for "Collocation" shown in Appendix A, the FCC rules regarding Wireless Facility Modifications shows that the term is construed broadly by the FCC for considering wireless facilities installations.

Spectrum Act Rules Analysis

The rules as shown above cited in 47 CFR §1.6100 which implement Section 6409(a) of the Middle Class Tax Relief and Job Creation Act (P.L. 112-96) ("Spectrum Act") enacted into law on February 22, 2012, provide for mandatory collocation permitting at eligible facilities when requests for collocating antenna facilities are submitted to a local government.

The proposed project includes addition of antenna panels, RRUs, a COVP box, a new antenna array platform and mounts, along with a new base station platform and stairway, an ice bridge, equipment and power cabinets, a Telco-Fiber Enclosure, a fiber network interface, a GPS antenna, separate power and fiber cables extending from existing power and fiber optic cable sources, and a hybrid fiber/power trunk cable. The proposed project is consistent with the definition of an *Eligible Facilities Request* as stated in 47 CFR §1.6100(b)(3).

Having reviewed the current project plans for this site, MSA's opinions as the Village's technology expert are as follows:

1. The instant project is a "collocation of new transmission equipment" within the meaning of 47 CFR §1.6100(b)(2); and

2. The instant project consists of substantial modifications and external changes although the site is a collocation on an existing cell tower. Dish will be constructing a totally new cell site at 1102 Hill Avenue in the Village of Glen Ellyn.

For the reasons discussed above and based on these conclusions, it is MSA's recommendation that the Village recognizes that the Spectrum Act rules indicate that the proposed project does not constitute a *Substantial Change* to the existing wireless facility. Therefore, the Village cannot deny and must approve the proposed project (3).

Recommendations

The proposed project will bring a fourth wireless carrier to the Village of Glen Ellyn. Dish Wireless joins incumbent carriers' AT&T, T-Mobile and Verizon Wireless in providing wireless service to residences, businesses, and industries in a substantial portion of the Village. Dish Wireless will provide additional 5G service to Glen Ellyn and to areas of Lombard and Glendale Heights that are within the range of its cell site. Dish's additional presence in Glen Ellyn will provide competition for wireless services, plans, devices, and connectivity for those residing or doing business along Hill Avenue, Crescent Boulevard, Illinois Route 53, St. Charles Road, I-355, and the surrounding areas.

Dish's proposed cell site is intended to use low-band and mid-range bandwidth frequencies to provide 5G-level data speeds and video quality. The antennas and radios to be located on the antenna array can operate 4G/LTE and 5G wireless service in the 617-894 MHz frequency range and at higher frequencies including mid-band frequency ranges at 1.695-2.200 GHz. The installation of Massive Multiple Input/Multiple Output (MIMO) antennas and complementary radios allow fixed and mobile users higher transmission and reception speeds than what was possible under 4G/LTE wireless standards, and will provide a much larger number of transmission and reception channels for wireless operations.

The project will allow Dish to more effectively deliver communications to a broader spectrum of wireless devices. These devices include connected vehicles, and Internet-connected appliances, business, manufacturing, and medical equipment, and personal devices, such as wearable wireless equipment, as well as smartphones, laptop computers, and tablets. Dish's proposed project underscores its effort by expanding more 5G channels and frequencies throughout the Village. 5G wireless equipment has entered the marketplace and is growing quickly.

The proposed project primarily involves the addition of an antenna array platform, antenna panels, RRUs, a COVP box, separate fiber optic and power cables, a hybrid fiber/power trunk cable, base station equipment, an ice bridge, and a steel base station platform. The project requires new tower and platform construction, and requires a Building Permit.

Dish's proposed project is allowed by the Glen Ellyn Zoning Ordinance as a Special Use. Section 10-4-19 of the Zoning Ordinance states:

---

(3) 47 CFR §1.6100(c).

> " (B) Special uses: No enumerated special use shall be considered to be an accessory use to any other permitted or special use, and a separate permit shall be required for each separate special use.
>
> 18. Television and radio tower, antenna support structure, water and fire tower, cooling tower, etc., which exceed the maximum height."

The proposed Dish Wireless antenna upgrading site is located on a tower that has a height of 70' (21.34 meters). According to Section 10-4-19(E)(1), the maximum permitted height for a tower in the I-1 zoning district is 45' (13.72 meters). Therefore, the project requires a Special Use permit. MSA recommends that Crown Castle be allowed to proceed with its proposed antenna array modifications, and base station equipment installation, and that the project go forward.

MSA recommends an electrical inspection conducted by the Village of the wiring of new base station equipment. It is also recommended that Crown Castle and Dish Wireless seek the proper permits for its proposed plans on the site.

Should the Village have any questions concerning this report, or if any additional background is needed, please contact me at your first opportunity.

Sincerely,

Stuart Chapman

Stuart Chapman
President
Municipal Services Associates, Inc.

Attachments

cc: Ariel Stouder, Fullerton Engineering, Inc., Representative for Dish Wireless & Crown Castle

APPENDIX A

47 CFR §1.6100 says in its entirety:

Subpart CC - State and Local Review of Applications for Wireless Service Facility Modification

§ 1.6100 Wireless Facility Modifications.

(a) [Reserved]

(b) Definitions. Terms used in this section have the following meanings.

(1) Base station. A structure or equipment at a fixed location that enables Commission-licensed or authorized wireless communications between user equipment and a communications network. The term does not encompass a tower as defined in this subpart or any equipment associated with a tower.

(I) The term includes, but is not limited to, equipment associated with wireless communications services such as private, broadcast, and public safety services, as well as unlicensed wireless services and fixed wireless services such as microwave backhaul.

(ii) The term includes, but is not limited to, radio transceivers, antennas, coaxial or fiber-optic cable, regular and backup power supplies, and comparable equipment, regardless of technological configuration (including Distributed Antenna Systems and small-cell networks).

(iii) The term includes any structure other than a tower that, at the time the relevant application is filed with the State or local government under this section, supports or houses equipment described in paragraphs (b)(1)(I) through (ii) of this section that has been reviewed and approved under the applicable zoning or siting process, or under another State or local regulatory review process, even if the structure was not built for the sole or primary purpose of providing such support.

(iv) The term does not include any structure that, at the time the relevant application is filed with the State or local government under this section, does not support or house equipment described in paragraphs (b)(1)(i)-(ii) of this section.

(2) Collocation. The mounting or installation of transmission equipment on an eligible support structure for the purpose of transmitting and/or receiving radio frequency signals for communications purposes.

(3) Eligible facilities request. Any request for modification of an existing tower or base station that does not substantially change the physical dimensions of such tower or base station, involving:

(i) Collocation of new transmission equipment;

(ii) Removal of transmission equipment; or

(iii) Replacement of transmission equipment.

(4) Eligible support structure. Any tower or base station as defined in this section, provided that it is existing at the time the relevant application is filed with the State or local government under this section.

(5) Existing. A constructed tower or base station is existing for purposes of this section if it has been reviewed and approved under the applicable zoning or siting process, or under another State or local regulatory review process, provided that a tower that has not been reviewed and approved because it was not in a zoned area when it was built, but was lawfully constructed, is existing for purposes of this definition.

(6) Site. For towers other than towers in the public rights-of-way, the current boundaries of the leased or owned property surrounding the tower and any access or utility easements currently related to the site, and, for other eligible support structures, further restricted to that area in proximity to the structure and to other transmission equipment already deployed on the ground. The current boundaries of a site are the boundaries that existed as of the date that the original support structure or a modification to that structure was last reviewed and approved by a State or local government, if the approval of the modification occurred prior to the Spectrum Act or otherwise outside of the Section 6409(a) process.

(7) Substantial change. A modification substantially changes the physical dimensions of an eligible support structure if it meets any of the following criteria:

(i) For towers other than towers in the public rights-of-way, it increases the height of the tower by more than 10% or by the height of one additional antenna array with separation from the nearest existing antenna not to exceed twenty feet, whichever is greater; for other eligible support structures, it increases the height of the structure by more than 10% or more than ten feet, whichever is greater;

(A) Changes in height should be measured from the original support structure in cases where deployments are or will be separated horizontally, such as on buildings' rooftops; in other circumstances, changes in height should be measured from the dimensions of the tower or base station, inclusive of originally approved appurtenances and any modifications that were approved prior to the passage of the Spectrum Act.

(ii) For towers other than towers in the public rights-of-way, it involves adding an appurtenance to the body of the tower that would protrude from the edge of the tower more than twenty feet, or more than the width of the tower structure at the level of the appurtenance, whichever is greater; for other eligible support structures, it involves adding an appurtenance to the body of the structure that would protrude from the edge of the structure by more than six feet;

(iii) For any eligible support structure, it involves installation of more than the standard number of new equipment cabinets for the technology involved, but not to exceed four cabinets; or, for towers in the public rights-of-way and base stations, it involves installation of any new equipment cabinets on the ground if there are no pre-existing ground cabinets associated with the structure, or else involves installation of ground cabinets that are more than 10% larger in height or overall volume than any other ground cabinets associated with the structure;

(iv) It entails any excavation or deployment outside the current site, except that, for towers other than towers in the public rights-of-way, it entails any excavation or deployment outside of the current site by more than 30 feet in any direction;

(v) It would defeat the concealment elements of the eligible support structure; or

(vi) It does not comply with conditions associated with the siting approval of the construction or modification of the eligible support structure or base station equipment, provided however that this limitation does not apply to any modification that is non-compliant only in a manner that would not exceed the thresholds identified in §1.6100(b)(7)(I) through (iv).

(8) Transmission equipment. Equipment that facilitates transmission for any Commission-licensed or authorized wireless communication service, including, but not limited to, radio transceivers, antennas, coaxial or fiber-optic cable, and regular and backup power supply. The term includes equipment associated with wireless communications services including, but not limited to, private, broadcast, and public safety services, as well as unlicensed wireless services and fixed wireless services such as microwave backhaul.

(9) Tower. Any structure built for the sole or primary purpose of supporting any Commission-licensed or authorized antennas and their associated facilities, including structures that are constructed for wireless communications services including, but not limited to, private, broadcast, and public safety services, as well as unlicensed wireless services and fixed wireless services such as microwave backhaul, and the associated site.

(c) Review of applications. A State or local government may not deny and shall approve any eligible facilities request for modification of an eligible support structure that does not substantially change the physical dimensions of such structure.

(1) Documentation requirement for review. When an applicant asserts in writing that a request for modification is covered by this section, a State or local government may require the applicant to provide documentation or information only to the extent reasonably related to determining whether the request meets the requirements of this section. A State or local government may not require an applicant to submit any other documentation, including but not limited to documentation intended to illustrate the need for such wireless facilities or to justify the business decision to modify such wireless facilities.

(2) Timeframe for review. Within 60 days of the date on which an applicant submits a request seeking approval under this section, the State or local government shall approve the application unless it determines that the application is not covered by this section.

(3) Tolling of the timeframe for review. The 60-day period begins to run when the application is filed, and may be tolled only by mutual agreement or in cases where the reviewing State or local government determines that the application is incomplete. The timeframe for review is not tolled by a moratorium on the review of applications.

(I) To toll the timeframe for incompleteness, the reviewing State or local government must provide written notice to the applicant within 30 days of receipt of the application, clearly and specifically delineating all missing documents or information. Such delineated information is limited to documents or information meeting the standard under paragraph (c)(1) of this section.

(ii) The timeframe for review begins running again when the applicant makes a supplemental submission in response to the State or local government's notice of incompleteness.

(iii) Following a supplemental submission, the State or local government will have 10 days to notify the applicant that the supplemental submission did not provide the information identified in the original notice delineating missing information. The timeframe is tolled in the case of second or subsequent notices pursuant to the procedures identified in this paragraph (c)(3). Second or subsequent notices of incompleteness may not specify missing documents or information that were not delineated in the original notice of incompleteness.

(4) Failure to act. In the event the reviewing State or local government fails to approve or deny a request seeking approval under this section within the timeframe for review (accounting for any tolling), the request shall be deemed granted. The deemed grant does not become effective until the applicant notifies the applicable reviewing authority in writing after the review period has expired (accounting for any tolling) that the application has been deemed granted.

(5) Remedies. Applicants and reviewing authorities may bring claims related to Section 6409(a) to any court of competent jurisdiction.

[80 FR 1269, Jan. 8, 2015. Redesignated and amended at 83 FR 51886, Oct. 15, 2018 and 85 FR 78005, December 3, 2020.]

MSA *MUNICIPAL SERVICES ASSOCIATES, INC.*

April 26, 2023

Mr. Marty Scott, AICP
Director of Community Development
Village of Glen Ellyn
535 Duane Street
Glen Ellyn, Illinois 60137

Dear Marty:

At the direction of the Village of Glen Ellyn, Municipal Services Associates, Inc. (MSA) has reviewed the plan submitted by Crown Castle ("Crown Castle") on behalf of Dish Wireless ("Dish") for installation of an antenna array including antenna and radio equipment, a base station platform and base station, and cabling on a lattice tower. Upon approval, the project will be the second of two Dish cell sites in Glen Ellyn.

The project consists of installation of a new antenna array platform beneath the top of a lattice tower with a height of 172' (52.44 meters) above ground level (AGL). The tower is located at 415 Taft Avenue behind an office building. The lattice tower antenna array platform will include the installation of a new antenna array platform, three (3) new antenna panels, six (6) Fujitsu Remote Radio Units (RRUs), and a cable over-voltage protection box(COVP). The proposed project also includes construction of a steel platform measuring 5' (1.53meters) x 7' (2.13 meters). The base station will include an equipment cabinet with a power protective cabinet, H-Frame mounting posts, a fiber network interface box, a telephone-fiber connection box, a safety switch, a GPS antenna, various cables and conduits for power and fiber connections, a 200-AMP meter socket, a fiber network interface device (NID), if needed, and an ice bridge. Details of the project and the recommendations of MSA are described below.

Existing Facilities: There are three (3) antenna arrays and a microwave dish and radio currently mounted on the tower. An antenna array containing eight (8) antenna panels belonging to T-Mobile are located at 159.58' (48.65 meters) AGL. A twelve (12) panel array operated by Verizon Wireless is located at 136.58' (41.64 meters) AGL, and a dish antenna and a radio is mounted at 120' (36.59 meters). The operator of the dish antenna and radio was not provided, and an antenna array formerly owned by Sprint that is now owned by T-Mobile, is mounted at 113.67' (34.66 meters). There are no other telecommunications facilities on the monopole tower. An equipment shelter belonging to Verizon, and a base station platform belonging to T-Mobile is also located on the site. Fiber and power facilities used by Verizon and T-Mobile are within the compound that contains the tower, shelter, and equipment platform. Dish will construct its own base station platform adjacent to the tower.

3 Golf Center, # 311 ● Hoffman Estates, Illinois 60169
TEL-847-882-7773 FAX-847-310-9275 MOBILE-847-867-6117
E-Mail: MSASchapman@cs.com
www.msatelecom.com

FCC 2014 Authorization Order "Shot Clock" Period of Review: Crown Castle submitted their most recent application for permit to the Village on February 10, 2023. The earliest date that Crown Castle's Special Use Permit application could be considered by the Village's Plan Commission was April 27, 2023. Crown Castle and the Village are proceeding as if the "Shot Clock" has not yet expired.

The cell site is a completely new project subject to FCC promulgated rules and regulations related to Section 332(c)(7)(ii) of the Telecommunications Act of 1996. There are substantial construction activities proposed for this project, and the carrier is installing an antenna array on this site for the first time. The existing tower requires a Special Use Permit due to its location in an industrial zoning district (I-1). Other than issuance of required building permits, MSA recommends no additional action from the Village.

Proposed Project

Dish Wireless is proposing to install a new antenna array on the existing lattice tower at 415 Taft Avenue. Additionally, Dish is proposing construction of a base station platform and ice bridge that is stationed immediately southwest of the tower.

Dish plans to install a platform capable of accommodating up to nine (9) antenna panels, although only three (3) antenna panels are proposed for initial installation. The plans that Dish submitted propose installation of three (3) JMA Wireless 5G antenna panels, six (6) Fujitsu Open Radio Access Network (O-RAN) radios, and a Raycap Cable Over-Voltage Protection (COVP) surge arrester to be mounted at a centerline height of 126' (38.41 meters).

The new antenna panels will carry five (5) frequency ranges: 617-698 MegaHertz (MHz), 698-894 MHz, 1.695-1.880 GigaHertz (GHz), 1.850-1.990 GHz, and 1.920-2.200 GHz. All five frequency bands support low-band and mid-band 5G service, and these ranges will provide significant channel capacity for voice, video, and data transmission and reception, while allowing for growth as more users subscribe to Dish's cellular service. Additionally, the JMA Wireless antennas are Massive Multiple Input/Multiple Output ("Massive MIMO") antennas. These antennas have technology that substantially increases the number of available channels needed to deliver faster speeds and data capacity. Massive MIMO antennas such as the JMA Wireless antennas, allow "Beamforming," which is the targeting of signals to specific user devices. Beamforming reduces interference and provides greater signal integrity.

Two (2) Fujitsu RRUs will be mounted to the rear of each antenna panel. A total of six (6) RRUs will be installed. The RRUs will be low-band and mid-band units that will be attached to the antenna array platform adjacent to each antenna panel. Dish also proposes installation of a Raycap cable over-voltage protection box (COVP) that will be attached directly to the left strut attached to the Alpha Sector (North) antenna mount. The COVP box is intended to act as a surge arrester that will protect coaxial, power and fiber cables serving the antenna panels and radios.

The antenna array will consist of three (3) sets of upper and lower antenna mounting bars measuring 8' (2.44 meters). The upper and lower mounting bars are spaced 30" (.763 meters) apart. The antennas and radios are attached to vertical pipes measuring 8' (2.44 meters) in height, and they are spaced 40" (1.02 meters) apart. The vertical pipes connect the upper and lower mounting bars. The mounting bars face north (Alpha), southeast (Beta), and southwest (Gamma).

Each of the mounting bars is connected to individual V-Frame mounts that consist of two (2) 35" (.891 meters) struts forming a "V" shape, and a 10' (3.05 meters) connecting rod. The struts are connected to three (3) sets of vertical cable support T-bracket mounts and clamps. Each of these mounts is connected by clamps to each leg of the lattice tower. The connecting rods attach the antenna mounting bars to the T-bracket mounts. The distance between each antenna mounting bar and each T-bracket mount is 2.83' (.862 meters).

A total of 174' (53.05 meters) of hybrid power/fiber optic cable will extend from the antenna array to the base station and to a power and fiber drop pole located near the center of the compound. Hybrid cable will be extended to Dish's proposed cell site. A 10' (3.05 meters) power cable encased in a 3" conduit pipe will extend from a power meter and to a 200-AMP meter socket on the base station platform. The power cable will also be connected to Dish's power protective cabinet (PPC) with a power disconnection switch.

A 30' (9.15 meters) underground 1.25" conduit pipe will connect fiber optic cable from the drop pole to the base station platform. The conduit pipe will be buried in a 30" (.763 meters) trench. The fiber cable will be connected to a fiber/telephone enclosure and, if needed, a fiber network interface device (NID).

From the NID or fiber/telephone enclosure, the fiber optic cable, along with the power cable, will intersect at the base station COVP box, and merge into a single hybrid fiber optic/power cable. From the COVP box, a 134' (40.85 meters) segment of hybrid fiber optic/power cable will extend from the PPC, across the ice bridge, and through the exterior of the tower to a tower-mounted COVP box, and then, by jumper cables, to the antennas and RRUs.

Dish proposes to lease a 5' (1.52 meters) by 7' (2.13 meters) parcel. The rectangular parcel is immediately east of the monopole tower, and it will be used for Dish's base station and base station platform. The platform will accommodate base station cabinets and a unistrut H-Frame mount for the PPC, the fiber/telephone enclosure, fiber NID, battery cabinet, and Internet distribution boxes. A proposed ice bridge measuring 6.5' (1.98 meters) in length by 1.0' (.305 meters) in width will connect the base station with the lattice tower.

Project Purpose

The proposed project is intended to substantially increase 5G signal capacity and speed for the southwestern and southern sections of the Village. These areas include the College of DuPage, the Village Links of Glen Ellyn, businesses along Roosevelt Road from President Street in Wheaton, to I-355, Panfish and Newton Parks, and downtown Glen Ellyn, and corridors along Lambert Road, Main Street, and Park Boulevard, along with residential areas north, south and west of the proposed cell site. The new antennas and radios will enhance the ability of the cell site to handle additional traffic carrying voice, video, and data. The new installation will provide Dish Wireless subscribers with high signal speeds using low-band and mid-band frequency blocks.

Dish Wireless subscribers would include small businesses, parks, schools, local single family home occupants and apartment dwellers, College of DuPage students and staff, and area motorists. Additionally, the antennas will allow for targeting signals to and from individual users, which will allow for more efficient use of signal resources. Within the range of this cell site are not only business and residential users, there are also users in the fields of recreation and education. All of them are using high-speed wireless services in some form. The new cell site will enable 5G services to new Dish Wireless users.

Growing demand from business, educational, residential, and recreational uses requires substantial bandwidth resources to provide higher data speeds and signal processing capacity. The 617-894 Megahertz (MHz), and 1.695-2.200 Gigahertz (GHz) bandwidth levels proposed by Dish will enable communications on 5G-capable devices and provide a platform for high-speed wireless streaming that will allow real-time transmission of television, movies, games, and other video applications transmitted over Dish's wireless network.

The new cell site is important for Dish to keep up with ever growing demand for wireless connectivity to Internet-of-Things (IoT) equipment and applications as they continue to increase their presence in the telecommunications marketplace. Wireless user demand for faster wireless speed and greater connectivity is ongoing. Besides IoT equipment, applications, connected vehicles, wireless devices and appliances, and wireless entertainment systems, demand for high-speed wireless service has spread throughout the local economy.

Project Description – Antenna Array

Dish proposes installation of new eight-pole antenna panels. An antenna panel will be installed on the three (3) longest sides of the platform. The antennas will have a centerline in the center of the tower at 126' (38.41 meters) AGL.

The proposed antenna panels are manufactured by JMA Wireless. These panels measure 72.0" (1.83 meters) in height, 20.0" (.509 meters) in width, and 8.0" (.204 meters) in depth. With mounting brackets, the JMA panels have a weight of 82.5 lbs. (37.5 kilograms). The antenna panels are eight-pole units capable of receiving four (4) jumper cables for the 617-896 MHz bandwidth ranges, and four (4) jumper cables for the 1.695-2.200 GHz bandwidth ranges. There are also connections for Remote Electrical Tilt (RET) cables. Each new panel will be connected by clamp brackets to a new galvanized steel mounting pipe measuring 8' (2.44 meters) in height. The Fujitsu radios will be connected to the mounting pipe immediately behind the antenna panels.

There are two (2) types of Fujitsu RRUs that will be connected to the antennas. The Fujitsu B604 RRU measures 14.9" (.379 meters) in height, 15.7" (.399 meters) in width, and 7.8" (.198 meters) in depth and each RRU weighs 63.9 lbs. (29.0 kilograms). The B604 RRUs operate at 1.695-2.200 GHz. The Fujitsu B605 RRU measures 14.9" (.379 meters) in height, 15.7" (.399 meters) in width, and 9.0" (.229 meters). Each B605 RRU weighs 74.9 lbs. (34.0 kilograms). The B605 RRUs operate at 617-894 MHz. Both types of Fujitsu radios carry low-band and mid-band 4G/LTE and 5G frequencies.

The RRUs will be connected to the mounting pipe located adjacent to its corresponding antenna panel. Eight (8) fiber jumper cables will be connected from the RRUs to each antenna panel. The antenna panels include a RET connection. The RRUs will be connected by a hybrid fiber cable to a cable over-voltage protection box (COVP) banded to the tower at the base of the mounting platform on the northeast corner of the center of the array platform. The COVP box measures 18.98" (.483 meters) in height, 14.39" (.366 meters) in width, and 8.15" (.207 meters) in depth. The COVP box has a weight of 21.8 pounds (9.91 kilograms). The tower-mounted COVP box will be connected to the equipment cabinet and power protective cabinet on the base station platform by a 100' (30.49 meters) hybrid fiber/power cable.

Project Description–Steel Platform and Base Station

As noted earlier in this report, Dish will lease a 5' (1.53 meters) by 7' (2.13 meters) rectangular space for its base station and base station platform. Within the leased space, Dish proposes to construct a steel platform with the same dimensions to accommodate its base station cabinets and H-Frame mount.

The base station will be located at a distance of approximately 6' (1.83 meters) from the tower. The base station platform and surrounding area are proposed to include an ice bridge measuring 6.5' (1.98 meters) in length and 12" (.305 meters) in width. The ice bridge will be supported by three (3) sets of pipe columns measuring 9.5' (2.90 meters) in height, and spaced 9' (2.74 meters) apart. Wire support brackets and “Trapeze” kits intended to hold hybrid fiber/power cable spans using clamps, will be attached to the ice bridge columns and will also be spaced 9.0' (2.74 meters) apart. The ice bridge columns will be buried in concrete piers at a depth of 3.5' (1.07 meters).

The base station platform floor will measure 7.0' (2.13 meters) in length, 5.0' (1.53 meters) in width, and 9.0" (.229 meters) in depth, from the top of the floor to the bottom. The base station floor will be an open mesh surface supported by two (2) cross braces measuring 5.0' (1.53 meters) in length that are spaced 2.67' (.813 meters) apart. The platform will be mounted at grade on four (4) footpads and four (4) struts measuring 1.25' (.381 meters) in height.

The unistrut H-Frame mount will comprise the rear mounting points of the base station. The H-Frame is supported by two (2) posts that are 5.08' (1.55 meters) in height. The posts are connected by five (5) crossbars that are 5' (1.53 meters) in length, and spaced 1.16' (.354 meters) apart. The H-Frame will support the base station power protective cabinet, a fiber/telephone enclosure, radio frequency modules, a safety switch, and a GPS antenna.

The power protective cabinet located on the H-Frame measures 39" (.992 meters) in height, 22.85" (.582 meters) in width, and 12.59" (.320 meters) in depth. The power protective cabinet will weigh 80 pounds (36.4 kilograms). The Zayo 5RU fiber NID box measures 36.12" (.919 meters) in height, 29" (.739 meters) in width, and 12.90" (.328 meters) in depth. The NID box weighs 85 lbs. (38.6 kilograms).

An equipment cabinet will be located on the steel platform. The equipment cabinet will contain a telephone and fiber connection boxes, RF modules, and signal processing equipment. In addition, the cabinet contains a heater, and a -48 Volt, 600-AMP power system. The cabinet measures 73" (1.86 meters) in height, 30" (.763 meters) in width, and 32" (.814 meters) in depth. The cabinet, when empty, weighs 376 lbs. (170.9 kilograms). A GPS antenna is also proposed for installation on the northeast corner of the platform. The GPS antenna will be mounted on a 1.0' (.305 meters) mounting pipe.

The base station will also include a fiber telco enclosure box. The box measures 20" (.509 meters) in height, 20" (.509 meters) in width, and has a depth of 9" (.229 meters). The fiber telco box will be located beneath the fiber NID enclosure near the platform floor. The base station also contains a Square D safety switch box. The safety switch box is 29.25" (.744 meters) in height, 19" (.483 meters) in width, and 8.5" (.216 meters) in depth. The safety switch weighs 53.5 pounds (24.3 kilograms). A power meter socket will be attached to the Power Protection Cabinet (PPC). The meter socket is 16" (.407 meters) in height, 12" (.305 meters) in width, and is 6" (.153 meters) in depth. The power meter weighs 18 pounds (8.18 kilograms) and has a rating of 200 amps.

Grounding: Crown Castle and Dish provided a detailed grounding plan. Each new antenna panel mounting pipe, RRU, and the COVP box will be grounded to a sector ground buss bar using #6 stranded copper green insulated ground wire. The sector ground bars will be grounded to an upper tower ground buss bar attached to the south section of the lattice tower linking the Beta and Gamma antenna sector mounting bars. The upper tower ground buss bar will be grounded to an existing tower ground ring at the base of the tower. The tower ground ring will be bonded to an ice bridge support post, and to the steel platform using #2 AWG solid copper conductors.

Dish will excavate around the perimeter of the base station platform to install a ground ring surrounding the base station platform. The ground ring will be buried in a trench with a depth of 30" (.763 meters) and a width of 1.0' (.305 meters). The ring will be #2 AWG solid bare tinned copper conductor ground wire. The ground ring will serve as a grounding point for base station equipment. The base of the platform and the PPC will be grounded to the ring by #2 copper tinned solid ground wire encased in separate conduit pipes. The ground wires will be exposed for between 3" (.076 meters) and 8" (.204 meters) from the cadweld termination point on the platform, and sheathed in conduit pipes for up to 24" (.610 meters) below grade.

The base station platform will include a buss bar that will serve as a grounding point for the GPS antenna, the power protective cabinet, the fiber NID, and the Telco-Fiber Enclosure. All grounds terminating at the buss bar will be #6 stranded and insulated ground wire, and the buss bar will be grounded to the ground ring using #2 AWG tinned solid copper ground wire. The H-Frame will also be grounded to a unistrut cross bar and to the ground ring with #2 AWG tinned solid copper ground wire.

The platform, base station, and existing tower ground ring will be grounded to the ground ring surrounding the base station platform and to four (4) ground rods. The ground rods are buried at a starting point 30" (.763 meters) below grade. Each ground rod is 8' (2.44 meters) long and buried beneath the 30" (.763 meters) point. The ground rods are located on the northeast, northwest, southwest, and southeast corners of the ground ring. A test well will be located at the northwest corner of the ground ring. Ice bridge support posts will be bonded to the ground ring by #2 AWG solid copper tinned wire surrounding the base station platform.

The grounding plan submitted by Crown Castle and Dish was acceptable.

Structural Evaluation: Dish provided a structural analysis prepared by Crown Castle of Canonsburg, Pennsylvania, ("Crown Castle") on August 30, 2021. Crown Castle tested stress levels on the lattice tower using the proposed platform kit, antenna panels, RRUs, COVP box, and cabling, as load factors, along with the existing antenna arrays and microwave equipment.

Tests were performed according to American National Standards Institute /Telecommunications Industry Association (ANSI/TIA) 222-H standards. The ANSI/TIA standards set tests using a basic wind speed of 116-MPH, with no ice, a basic wind speed of 40-MPH with 1.5" of ice, ice density of 56 pounds per square foot, a service wind speed of 60-MPH, and a deflection wind speed of 60-MPH.

Results of the analysis found that the level of the lattice tower where the proposed project is to be located passed section capacity, wind speed, and ice load tests, and that stress capacity of the tower also passed. Crown Castle assigned a maximum structure rating of 79.1%. Crown Castle also rated anchor rods capacity at 50.8%, the base foundation (structure) rating of 9.6% and a soil interaction foundation rating of 79.1%.

Crown Castle also calculated section capacity ratings of 54.2% for the tower legs, 51.6% for diagonals, 3.9% for secondary horizontal components, 2.2% for top girt components, and 64.8% for bolt checks, for a summary of 64.8%(1). Based on its ratings, Crown Castle opined that "The tower and its foundation have sufficient capacity to carry the proposed load configuration. No modifications are required at this time."(2)

It should be noted that a higher rating indicates that less structural capacity exists for loads created by one or more antenna arrays and associated cabling and equipment. In this instance, the rating is considerably lower than the maximum rating (105%) that would indicate that no additional capacity exists for proposed equipment.

The structural evaluation is acceptable and has been submitted to the Village.

Requested Information of Applicant: Municipal Services Associates, Inc. reviewed the plans submitted by Dish and Crown Castle on April 20 and April 25, 2023 and determined that the application was complete and that no additional information would be requested from Dish or Crown Castle.

FCC OET Bulletin 65 Appendix A Checklist and Radio Frequency Emissions Safety Compliance: The FCC completely occupies the field as to setting RF safety standards in the United States. The Village is not permitted to set its own standards regardless of whether higher, lower, or even the same as the FCC's standards. The Commission derives its authority under a provision of the National Environmental Policy Act (NEPA) of 1969. The Commission permits the Village to determine if a proposed wireless project meets the required FCC 47 CFR § 1.1307 et seq. (the "FCC rules") and FCC Office of Engineering and Technology Bulletin 65 ("OET 65") RF safety requirements.

The actual standards set by the Commission are found in the FCC Office of Engineering and Technology Bulletin 65, titled "Evaluating Compliance with FCC Guidelines for Human Exposure to Radiofrequency Electromagnetic Fields." A website containing the bulletin is at http://www.fcc.gov/Bureaus/Engineering_Technology/Documents/bulletins/oet65/oet65.pdf.

Under the FCC rules, certain types of wireless projects are deemed to be "categorically excluded," thus not subject to further RF evaluation under the rules due to identified factors including: whether the antenna supporting structure is a building or is shared to perform some other function, and the lowest portion of the transmitting antenna is at least 10 meters (32.8 feet) above ground.

---

(1)Crown Castle, Structural Analysis Report, Site No. CHCHI00216A, Project Number 2012805, August 30, 2021, at 6, 7, and 8.
(2) *Ibid*, at 6.

Dish provided a completed FCC OET Bulletin 65 Appendix A checklist. As the proposed project will be operated as a Broadband Personal Communications Services, and that the lowest point of the antenna array will be located at 123' (37.50 meters), a point that is 90.2' (27.50 meters) above the threshold ceiling for regulation of RF exposure. The proposed project qualifies for categorical exclusion under the FCC rules because the lowest point of each transmitting antenna is greater than 10 meters above ground.

The use of panel antennas and other forms of wireless telecommunications creates a concern that radio frequencies used by cellular and wireless providers might interfere with radio frequencies used for local government public safety and public services communications. Dish Wireless and other wireless providers may be using a radio frequency spectrum that had been previously used for analog television transmission. Other frequencies formerly used for television transmission will be allocated by the FCC to local governments for public safety uses.

To address this concern, Crown Castle and Dish Wireless was requested to provide a "Good faith efforts" statement concerning radio frequency interference. Crown Castle provided this statement which said:

"DISH shall comply with all FCC rules regarding interference to other radio services and human exposure to radio frequency energy. In the unlikely event that interference does occur, DISH agrees to fully cooperate with the entity experiencing interference to identify and correct, to the extent reasonably possible, any issues caused by the DISH installation."

Section 6409(a) - Spectrum Act - Evaluation:

MSA has reviewed the Crown Castle and Dish Wireless application for the following scope of work at 415 Taft Avenue, and located in the Village of Glen Ellyn stated on pages two and three of this report, and has reviewed the proposed project and plans in light of Section 6409(a), also known as the "Spectrum Act," contained within the Middle Class Tax Relief and Job Creation Act of 2012. (P.L. 112-96 enacted February 22, 2012). Section 6409(a), codified at 47 CFR §1.6100, addresses mandatory collocations at existing wireless towers and base stations, facially eliminating local discretion in connection with collocation projects.

In the definition for "Collocation" shown in Appendix A, the FCC rules regarding Wireless Facility Modifications shows that the term is construed broadly by the FCC for considering wireless facilities installations.

Spectrum Act Rules Analysis

The rules as shown above cited in 47 CFR §1.6100 which implement Section 6409(a) of the Middle Class Tax Relief and Job Creation Act (P.L. 112-96) ("Spectrum Act") enacted into law on February 22, 2012, provide for mandatory collocation permitting at eligible facilities when requests for collocating antenna facilities are submitted to a local government.

The proposed project includes addition of antenna panels, RRUs, a COVP box, a new antenna array platform and mounts, along with a new base station platform and stairway, an ice bridge, equipment and power cabinets, a Telco-Fiber Enclosure, a fiber network interface, a GPS antenna, separate power and fiber cables extending from existing power and fiber optic cable sources, and a hybrid fiber/power trunk cable. The proposed project is consistent with the definition of an *Eligible Facilities Request* as stated in 47 CFR §1.6100(b)(3).

Having reviewed the current project plans for this site, MSA's opinions as the Village's technology expert are as follows:

1. The instant project is a "collocation of new transmission equipment" within the meaning of 47 CFR §1.6100(b)(2); and

2. The instant project consists of substantial modifications and external changes although the site is a collocation on an existing cell tower. Dish will be constructing a totally new cell site at 415 Taft Avenue in the Village of Glen Ellyn.

For the reasons discussed above and based on these conclusions, it is MSA's recommendation that the Village recognizes that the Spectrum Act rules indicate that the proposed project does not constitute a *Substantial Change* to the existing wireless facility. Therefore, the Village cannot deny and must approve the proposed project (3).

Recommendations

The proposed project further augments Dish Wireless' service in Glen Ellyn, and will link coverage areas on the north and northeast sides of the Village from its Hill Avenue cell site, with the coverage provided in the south and southwest sections of the Village by this cell site. Dish Wireless will provide additional 5G service to Glen Ellyn and to areas of Glen Ellyn and Wheaton that are within the range of its cell site. Dish's additional presence in Glen Ellyn will provide competition for wireless services, plans, devices, and connectivity for those residing or doing business along Roosevelt Road, Park Boulevard, Lambert Road, Crescent Boulevard, President Street, Illinois Route 53, I-355, and the surrounding areas.

Dish's proposed cell site is intended to use low-band and mid-range bandwidth frequencies to provide 5G-level data speeds and video quality. The antennas and radios to be located on the antenna array can operate 4G/LTE and 5G wireless service in the 617-894 MHz frequency range and at higher frequencies including mid-band frequency ranges at 1.695-2.200 GHz.

(3) 47 CFR §1.6100(c).

The installation of Massive Multiple Input/Multiple Output (MIMO) antennas and complementary radios allow fixed and mobile users higher transmission and reception speeds than what was possible under 4G/LTE wireless standards, and will provide a much larger number of transmission and reception channels for wireless operations.

The project will allow Dish to send and receive signals from an ever-widening variety of wireless devices. These devices include connected vehicles, and Internet-connected appliances, business, manufacturing, and medical equipment, and personal devices, such as wearable wireless equipment, as well as smartphones, laptop computers, and tablets. Dish's proposed project underscores its effort by expanding more 5G channels and frequencies throughout the Village. 5G wireless equipment has entered the marketplace and is growing quickly.

The proposed project primarily involves the addition of an antenna array platform, antenna panels, RRUs, a COVP box, separate fiber optic and power cables, a hybrid fiber/power trunk cable, base station equipment, an ice bridge, and a steel base station platform. The project requires new tower and platform construction, and requires a Building Permit.

Dish's proposed project is allowed by the Glen Ellyn Zoning Ordinance as a Special Use. Section 10-4-16 of the Zoning Ordinance states:

> " (B) Special uses: No enumerated special use shall be considered to be an accessory use to any other permitted or special use, and a separate permit shall be required for each separate special use.
>
> > 13. Television and radio tower, antenna support structure, church spire, belfry, monument, tank, water and fire tower, stage tower or scenery loft, cooling tower, ornamental tower, and spire, chimney, elevator bulkhead, conveyor and flagpole which exceed the maximum height.

The proposed Dish Wireless antenna upgrading site is located on a tower that has a height of 172' (52.44 meters). According to Section 10-4-16(E)(2), the maximum permitted height for a tower or antenna support structure in the C-4 zoning district shall be specified in the ordinance granting a special use permit. The height of the proposed cell site is 126' (38.42 meters). To that end, Crown Castle has submitted an application for a Special Use permit. MSA recommends that Crown Castle be allowed to proceed with its proposed antenna array modifications, and base station equipment installation, and that the project go forward.

MSA recommends an electrical inspection conducted by the Village of the wiring of new base station equipment. It is also recommended that Crown Castle and Dish Wireless seek the proper permits for its proposed plans on the site.

Should the Village have any questions concerning this report, or if any additional background is needed, please contact me at your first opportunity.

Sincerely,

Stuart Chapman

Stuart Chapman
President
Municipal Services Associates, Inc.

Attachments

cc: Ariel Stouder, Fullerton Engineering, Inc., Representative for Dish Wireless & Crown Castle

APPENDIX A

47 CFR §1.6100 says in its entirety:

Subpart CC - State and Local Review of Applications for Wireless Service Facility Modification

§ 1.6100 Wireless Facility Modifications.

(a) [Reserved]

(b) Definitions. Terms used in this section have the following meanings.

(1) Base station. A structure or equipment at a fixed location that enables Commission-licensed or authorized wireless communications between user equipment and a communications network. The term does not encompass a tower as defined in this subpart or any equipment associated with a tower.

(I) The term includes, but is not limited to, equipment associated with wireless communications services such as private, broadcast, and public safety services, as well as unlicensed wireless services and fixed wireless services such as microwave backhaul.

(ii) The term includes, but is not limited to, radio transceivers, antennas, coaxial or fiber-optic cable, regular and backup power supplies, and comparable equipment, regardless of technological configuration (including Distributed Antenna Systems and small-cell networks).

(iii) The term includes any structure other than a tower that, at the time the relevant application is filed with the State or local government under this section, supports or houses equipment described in paragraphs (b)(1)(I) through (ii) of this section that has been reviewed and approved under the applicable zoning or siting process, or under another State or local regulatory review process, even if the structure was not built for the sole or primary purpose of providing such support.

(iv) The term does not include any structure that, at the time the relevant application is filed with the State or local government under this section, does not support or house equipment described in paragraphs (b)(1)(i)-(ii) of this section.

(2) Collocation. The mounting or installation of transmission equipment on an eligible support structure for the purpose of transmitting and/or receiving radio frequency signals for communications purposes.

(3) Eligible facilities request. Any request for modification of an existing tower or base station that does not substantially change the physical dimensions of such tower or base station, involving:

(i) Collocation of new transmission equipment;

(ii) Removal of transmission equipment; or

(iii) Replacement of transmission equipment.

(4) Eligible support structure. Any tower or base station as defined in this section, provided that it is existing at the time the relevant application is filed with the State or local government under this section.

(5) Existing. A constructed tower or base station is existing for purposes of this section if it has been reviewed and approved under the applicable zoning or siting process, or under another State or local regulatory review process, provided that a tower that has not been reviewed and approved because it was not in a zoned area when it was built, but was lawfully constructed, is existing for purposes of this definition.

(6) Site. For towers other than towers in the public rights-of-way, the current boundaries of the leased or owned property surrounding the tower and any access or utility easements currently related to the site, and, for other eligible support structures, further restricted to that area in proximity to the structure and to other transmission equipment already deployed on the ground. The current boundaries of a site are the boundaries that existed as of the date that the original support structure or a modification to that structure was last reviewed and approved by a State or local government, if the approval of the modification occurred prior to the Spectrum Act or otherwise outside of the Section 6409(a) process.

(7) Substantial change. A modification substantially changes the physical dimensions of an eligible support structure if it meets any of the following criteria:

(i) For towers other than towers in the public rights-of-way, it increases the height of the tower by more than 10% or by the height of one additional antenna array with separation from the nearest existing antenna not to exceed twenty feet, whichever is greater; for other eligible support structures, it increases the height of the structure by more than 10% or more than ten feet, whichever is greater;

(A) Changes in height should be measured from the original support structure in cases where deployments are or will be separated horizontally, such as on buildings' rooftops; in other circumstances, changes in height should be measured from the dimensions of the tower or base station, inclusive of originally approved appurtenances and any modifications that were approved prior to the passage of the Spectrum Act.

(ii) For towers other than towers in the public rights-of-way, it involves adding an appurtenance to the body of the tower that would protrude from the edge of the tower more than twenty feet, or more than the width of the tower structure at the level of the appurtenance, whichever is greater; for other eligible support structures, it involves adding an appurtenance to the body of the structure that would protrude from the edge of the structure by more than six feet;

(iii) For any eligible support structure, it involves installation of more than the standard number of new equipment cabinets for the technology involved, but not to exceed four cabinets; or, for towers in the public rights-of-way and base stations, it involves installation of any new equipment cabinets on the ground if there are no pre-existing ground cabinets associated with the structure, or else involves installation of ground cabinets that are more than 10% larger in height or overall volume than any other ground cabinets associated with the structure;

(iv) It entails any excavation or deployment outside the current site, except that, for towers other than towers in the public rights-of-way, it entails any excavation or deployment outside of the current site by more than 30 feet in any direction;

(v) It would defeat the concealment elements of the eligible support structure; or

(vi) It does not comply with conditions associated with the siting approval of the construction or modification of the eligible support structure or base station equipment, provided however that this limitation does not apply to any modification that is non-compliant only in a manner that would not exceed the thresholds identified in §1.6100(b)(7)(I) through (iv).

(8) Transmission equipment. Equipment that facilitates transmission for any Commission-licensed or authorized wireless communication service, including, but not limited to, radio transceivers, antennas, coaxial or fiber-optic cable, and regular and backup power supply. The term includes equipment associated with wireless communications services including, but not limited to, private, broadcast, and public safety services, as well as unlicensed wireless services and fixed wireless services such as microwave backhaul.

(9) Tower. Any structure built for the sole or primary purpose of supporting any Commission-licensed or authorized antennas and their associated facilities, including structures that are constructed for wireless communications services including, but not limited to, private, broadcast, and public safety services, as well as unlicensed wireless services and fixed wireless services such as microwave backhaul, and the associated site.

(c) Review of applications. A State or local government may not deny and shall approve any eligible facilities request for modification of an eligible support structure that does not substantially change the physical dimensions of such structure.

(1) Documentation requirement for review. When an applicant asserts in writing that a request for modification is covered by this section, a State or local government may require the applicant to provide documentation or information only to the extent reasonably related to determining whether the request meets the requirements of this section. A State or local government may not require an applicant to submit any other documentation, including but not limited to documentation intended to illustrate the need for such wireless facilities or to justify the business decision to modify such wireless facilities.

(2) Timeframe for review. Within 60 days of the date on which an applicant submits a request seeking approval under this section, the State or local government shall approve the application unless it determines that the application is not covered by this section.

(3) Tolling of the timeframe for review. The 60-day period begins to run when the application is filed, and may be tolled only by mutual agreement or in cases where the reviewing State or local government determines that the application is incomplete. The timeframe for review is not tolled by a moratorium on the review of applications.

(I) To toll the timeframe for incompleteness, the reviewing State or local government must provide written notice to the applicant within 30 days of receipt of the application, clearly and specifically delineating all missing documents or information. Such delineated information is limited to documents or information meeting the standard under paragraph (c)(1) of this section.

(ii) The timeframe for review begins running again when the applicant makes a supplemental submission in response to the State or local government's notice of incompleteness.

(iii) Following a supplemental submission, the State or local government will have 10 days to notify the applicant that the supplemental submission did not provide the information identified in the original notice delineating missing information. The timeframe is tolled in the case of second or subsequent notices pursuant to the procedures identified in this paragraph (c)(3). Second or subsequent notices of incompleteness may not specify missing documents or information that were not delineated in the original notice of incompleteness.

(4) Failure to act. In the event the reviewing State or local government fails to approve or deny a request seeking approval under this section within the timeframe for review (accounting for any tolling), the request shall be deemed granted. The deemed grant does not become effective until the applicant notifies the applicable reviewing authority in writing after the review period has expired (accounting for any tolling) that the application has been deemed granted.

(5) Remedies. Applicants and reviewing authorities may bring claims related to Section 6409(a) to any court of competent jurisdiction.

[80 FR 1269, Jan. 8, 2015. Redesignated and amended at 83 FR 51886, Oct. 15, 2018 and 85 FR 78005, December 3, 2020.]

DISH Wireless L.L.C.
9601 S. Meridian Blvd.
Englewood, CO 80112
303.723.1000

Village of Glen Ellyn, Building Division
535 Duane Street
Glen Ellyn, IL 60137

9/14/2022

RE: Project Description and Location: DISH Site CHCHI00652A at 21 W. 180 Hill Ave, Glen Ellyn, IL (the "Project")

To whom it may concern:

This letter responds to your request for information about the Project referenced above, specifically the potential to interfere with communication facilities located nearby and conformance with the Federal Communications Commission ("FCC") rules governing human exposure to radio frequency energy (see FCC OET Bulletin 65 guidelines). DISH Wireless L.L.C. ("DISH") shall comply with all FCC rules regarding interference with other radio services and all FCC rules concerning human exposure to radio frequency energy.

The FCC has granted licenses for the use of certain radio frequencies exclusively by wireless service providers, including DISH. Each wireless service provider uses specific frequencies (channels) on which to transmit and receive radio signals. Pursuant to these licenses, DISH is authorized to provide wireless service nationwide.

Wireless transmitters must be type-accepted by the FCC to ensure compliance with technical standards that limit the frequencies, output power, radio frequency emissions, spurious radio noise, and other technical parameters. Wireless licensees like DISH are required to use type-accepted equipment. The assignment of frequencies and the FCC rules keep cellular radio signals from interfering with, or being interfered with by, other radio transmissions and provide guidelines outlining the limits for permissible human radio frequency exposure.

DISH shall comply with all FCC rules regarding interference to other radio services and human exposure to radio frequency energy. In the unlikely event that interference does occur, DISH agrees to fully cooperate with the entity experiencing interference to identify and correct, to the extent reasonably possible, any issues caused by the DISH installation.

Very truly yours,

Imran Khan
RF Engineering Manager – Chicago

DISH Wireless L.L.C. SITE ID:

CHCHI00652A

DISH Wireless L.L.C. SITE ADDRESS:

1102 HILL AVENUE
GLEN ELLYN, IL 60137

ILLINOIS - CITY OF GLEN ELLYN CODE OF COMPLIANCE

ALL WORK SHALL BE PERFORMED AND MATERIALS INSTALLED IN ACCORDANCE WITH THE CURRENT EDITIONS OF THE FOLLOWING CODES AS ADOPTED BY THE LOCAL GOVERNING AUTHORITIES. NOTHING IN THESE PLANS IS TO BE CONSTRUED TO PERMIT WORK NOT CONFORMING TO THESE CODES

CODE TYPE	CODE
BUILDING	2019 IBC
ELECTRICAL	2011 NEC
MECHANICAL	2009 IMC

SHEET INDEX

SHEET NO.	SHEET TITLE
T-1	TITLE SHEET
LS1	SITE SURVEY
A-1	OVERALL AND ENLARGED SITE PLAN
A-2	ELEVATION, ANTENNA LAYOUT AND SCHEDULE
A-3	EQUIPMENT PLATFORM AND H-FRAME DETAILS
A-4	EQUIPMENT DETAILS
A-5	EQUIPMENT DETAILS
A-6	EQUIPMENT DETAILS
E-1	ELECTRICAL/FIBER ROUTE PLAN AND NOTES
E-2	ELECTRICAL DETAILS
E-3	ELECTRICAL ONE-LINE, FAULT CALCS & PANEL SCHEDULE
G-1	GROUNDING PLANS AND NOTES
G-2	GROUNDING DETAILS
G-3	GROUNDING DETAILS
RF-1	RF CABLE COLOR CODE
GN-1	LEGEND AND ABBREVIATIONS
GN-2	RF SIGNAGE
GN-3	GENERAL NOTES
GN-4	GENERAL NOTES
GN-5	GENERAL NOTES

SCOPE OF WORK

THIS IS NOT AN ALL INCLUSIVE LIST. CONTRACTOR SHALL UTILIZE SPECIFIED EQUIPMENT PART OR ENGINEER APPROVED EQUIVALENT. CONTRACTOR SHALL VERIFY ALL NEEDED EQUIPMENT TO PROVIDE A FUNCTIONAL SITE. THE PROJECT GENERALLY CONSISTS OF THE FOLLOWING:

TOWER SCOPE OF WORK:
- INSTALL (3) PROPOSED PANEL ANTENNAS (1 PER SECTOR)
- INSTALL (1) PROPOSED ANTENNA PLATFORM MOUNT
- INSTALL PROPOSED JUMPERS
- INSTALL (6) PROPOSED RRUs (2 PER SECTOR)
- INSTALL (1) PROPOSED OVER VOLTAGE PROTECTION DEVICE (OVP)
- INSTALL (1) PROPOSED HYBRID CABLE

GROUND SCOPE OF WORK:
- INSTALL (1) PROPOSED METAL PLATFORM
- INSTALL (1) PROPOSED ICE BRIDGE
- INSTALL (1) PROPOSED PPC CABINET
- INSTALL (1) PROPOSED EQUIPMENT CABINET
- INSTALL (1) PROPOSED POWER CONDUIT
- INSTALL (1) PROPOSED TELCO CONDUIT
- INSTALL (1) PROPOSED TELCO-FIBER BOX
- INSTALL (1) PROPOSED GPS UNIT
- INSTALL (1) PROPOSED SAFETY SWITCH (IF REQUIRED)
- INSTALL (1) PROPOSED FIBER NID (IF REQUIRED)
- INSTALL (1) PROPOSED METER SOCKET

SITE PHOTO

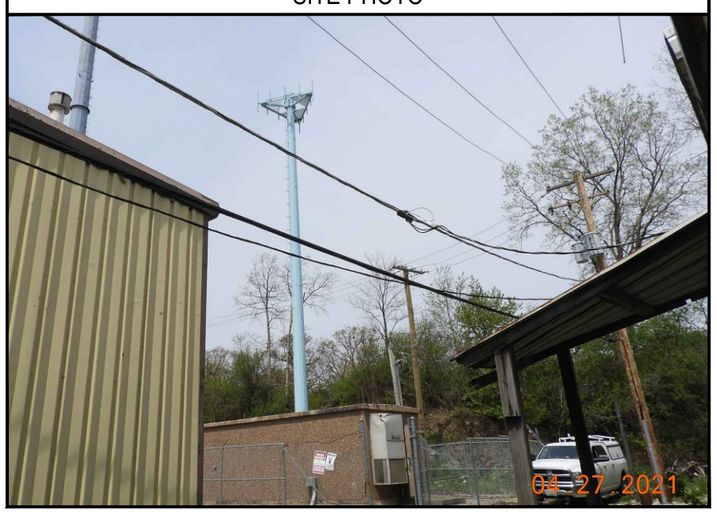

UNDERGROUND SERVICE ALERT
UTILITY NOTIFICATION CENTER OF ILLINOIS
(800) 892-0123
WWW.ILLINOIS1CALL.COM

CALL 2 WORKING DAYS UTILITY NOTIFICATION PRIOR TO CONSTRUCTION

811

GENERAL NOTES

THE FACILITY IS UNMANNED AND NOT FOR HUMAN HABITATION. A TECHNICIAN WILL VISIT THE SITE AS REQUIRED FOR ROUTINE MAINTENANCE. THE PROJECT WILL NOT RESULT IN ANY SIGNIFICANT DISTURBANCE OR EFFECT ON DRAINAGE. NO SANITARY SEWER SERVICE, POTABLE WATER, OR TRASH DISPOSAL IS REQUIRED AND NO COMMERCIAL SIGNAGE IS PROPOSED.

11"x17" PLOT WILL BE HALF SCALE UNLESS OTHERWISE NOTED

CONTRACTOR SHALL VERIFY ALL PLANS, EXISTING DIMENSIONS, AND CONDITIONS ON THE JOB SITE, AND SHALL IMMEDIATELY NOTIFY THE ENGINEER IN WRITING OF ANY DISCREPANCIES BEFORE PROCEEDING WITH THE WORK.

SITE INFORMATION

PROPERTY OWNER:	JAC PROPERTIES GE LLC
ADDRESS:	4554 E ECO INDUSTRIAL PLACE TUCSON, AZ 85756
TOWER TYPE:	MONOPOLE
TOWER CO SITE ID:	817173
TOWER APP NUMBER:	570902
COUNTY:	DUPAGE
LATITUDE (NAD 83):	41° 52' 59.17" N 41.883111 N
LONGITUDE (NAD 83):	88° 2' 16.85" W 88.038028 W
ZONING JURISDICTION:	GLEN ELLYN
ZONING DISTRICT:	N/A
PARCEL NUMBER:	0512207033
OCCUPANCY GROUP:	U
CONSTRUCTION TYPE:	II-B
POWER COMPANY:	COMED
TELEPHONE COMPANY:	TBD

PROJECT DIRECTORY

APPLICANT:	DISH Wireless L.L.C. 5701 SOUTH SANTA FE DRIVE LITTLETON, CO 80120
TOWER OWNER:	CROWN CASTLE 2000 CORPORATE DRIVE CANONSBURG, PA 15317 (877) 486-9377
SITE DESIGNER:	INFINIGY ENGINEERS, PLLC FIRM REGISTRATION# 84005973-0002 500 WEST OFFICE CENTER DRIVE SUITE 150 FORT WASHINGTON, PA 19034
SITE ACQUISITION:	SARAH PARSONS SARAH.PARSONS@CROWNCASTLE.COM
CONSTRUCTION MANAGER:	GEORGE DITCHMAN GEORGE.DITCHMAN@DISH.COM
RF ENGINEER:	CHRISTOPHER HOLMES (224) 600-0546

DIRECTIONS

DIRECTIONS FROM CHICAGO O'HARE INTERNATIONAL AIRPORT:

DEPART AND HEAD NORTHEAST ON CHICAGO O'HARE INTERNATIONAL AIRPORT, KEEP STRAIGHT TO GET ONTO I-190 E / KENNEDY EXPY, HEAD RIGHT ON THE RAMP FOR I-294 SOUTH TOWARD INDIANA, HEAD RIGHT ON THE RAMP FOR I-290 WEST TOWARD ROCKFORD, TAKE THE RAMP ON THE RIGHT FOR I-355 S, TAKE THE RAMP ON THE RIGHT AND FOLLOW SIGNS FOR IL-64, TURN LEFT ONTO IL-64 / NORTH AVE, BEAR RIGHT, THEN BEAR RIGHT ONTO IL-53 / N COLUMBINE AVE, TURN LEFT ONTO W SAINT CHARLES RD, TURN RIGHT ONTO CRESCENT BLVD, TURN LEFT ONTO FINLEY RD, THEN IMMEDIATELY TURN RIGHT ONTO GLEN OAK RD, ROAD NAME CHANGES TO HILL AVE, TURN RIGHT, ARRIVE AT DESTINATION

VICINITY MAP

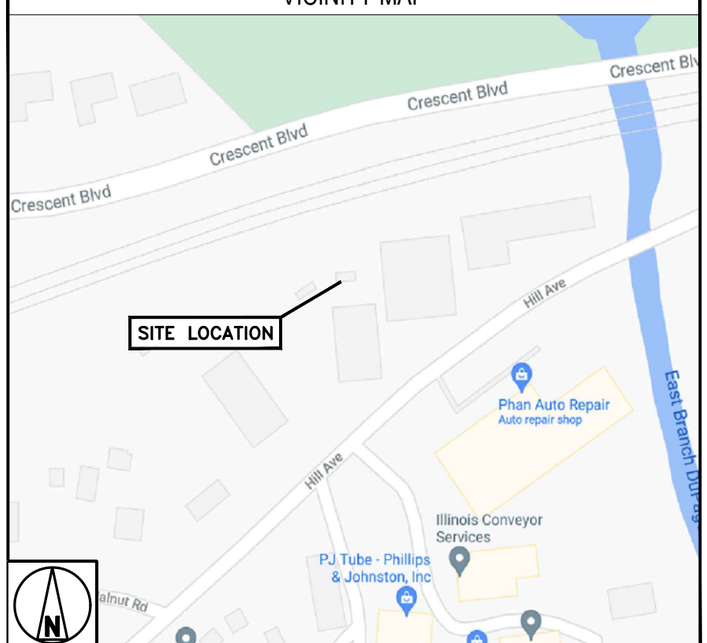

NO SCALE

dish wireless

5701 SOUTH SANTA FE DRIVE
LITTLETON, CO 80120

CROWN CASTLE
2000 CORPORATE DRIVE
CANONSBURG, PA 15317

INFINIGY
FROM ZERO TO INFINIGY
the solutions are endless
500 WEST OFFICE CENTER DRIVE
SUITE 150 | FORT WASHINGTON, PA 19034
WWW.INFINIGY.COM

CHRISTOPHER J. WARREN
062.059402
LICENSED PROFESSIONAL ENGINEER
6/23/22
STATE OF ILLINOIS
EXP. 11/30/23

FIRM REGISTRATION: 184005973-0002

IT IS A VIOLATION OF LAW FOR ANY PERSON, UNLESS THEY ARE ACTING UNDER THE DIRECTION OF A LICENSED PROFESSIONAL ENGINEER, TO ALTER THIS DOCUMENT.

DRAWN BY:	CHECKED BY:	APPROVED BY:
RCD	SS	CJW

RFDS REV #: N/A

CONSTRUCTION DOCUMENTS

SUBMITTALS

REV	DATE	DESCRIPTION
A	06/30/2021	ISSUED FOR REVIEW
0	06/16/2022	ISSUED FOR CONSTRUCTION
1	06/23/2022	ISSUED FOR CONSTRUCTION

A&E PROJECT NUMBER
6039-Z0001-C

DISH Wireless L.L.C.
PROJECT INFORMATION
CHCHI00652A
1102 HILL AVENUE
GLEN ELLYN, IL 60137

SHEET TITLE
TITLE SHEET

SHEET NUMBER
T-1

NOTES

1. CONTRACTOR SHALL FIELD VERIFY ALL DIMENSIONS.
2. ANTENNAS AND MOUNTS OMITTED FOR CLARITY.

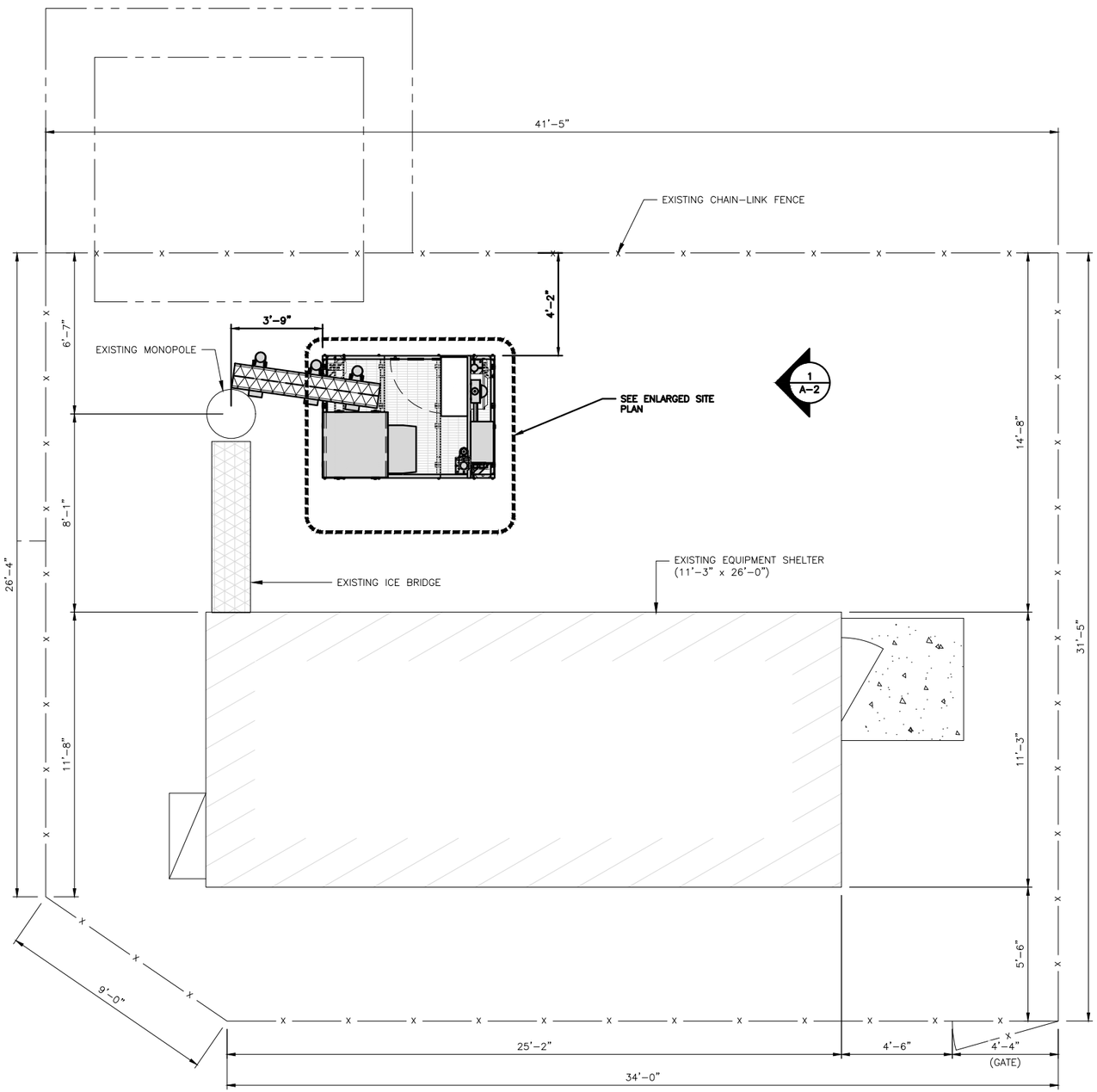

OVERALL SITE PLAN

12" 6" 0 1' 2' 3' 4' 5' 6' 7'
3/8"=1'-0"

1

NOTES

1. CONTRACTOR SHALL FIELD VERIFY ALL DIMENSIONS.
2. CONTRACTOR SHALL MAINTAIN A 10'-0" MINIMUM SEPARATION BETWEEN THE PROPOSED GPS UNIT, TRANSMITTING ANTENNAS AND EXISTING GPS UNITS.
3. ANTENNAS AND MOUNTS OMITTED FOR CLARITY.

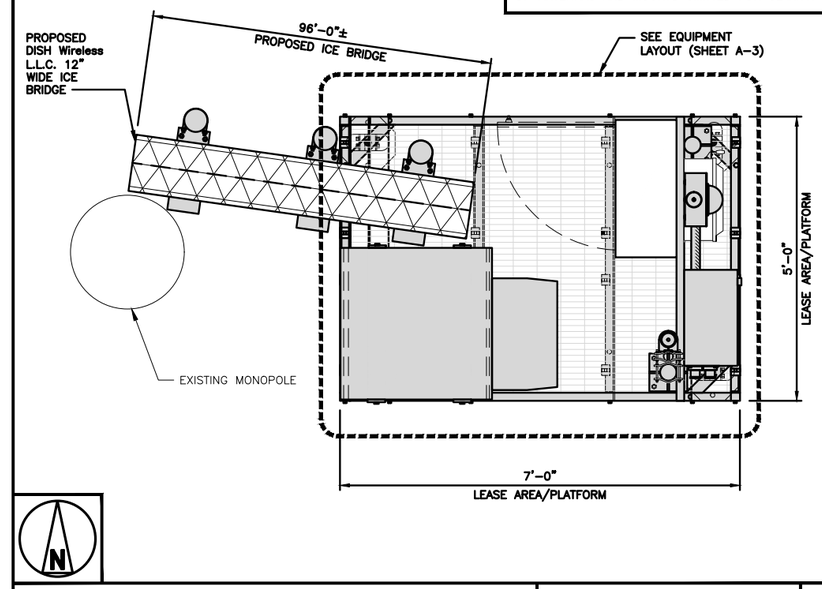

ENLARGED SITE PLAN

12" 6" 0 1' 2' 3'
3/4"=1'-0"

2

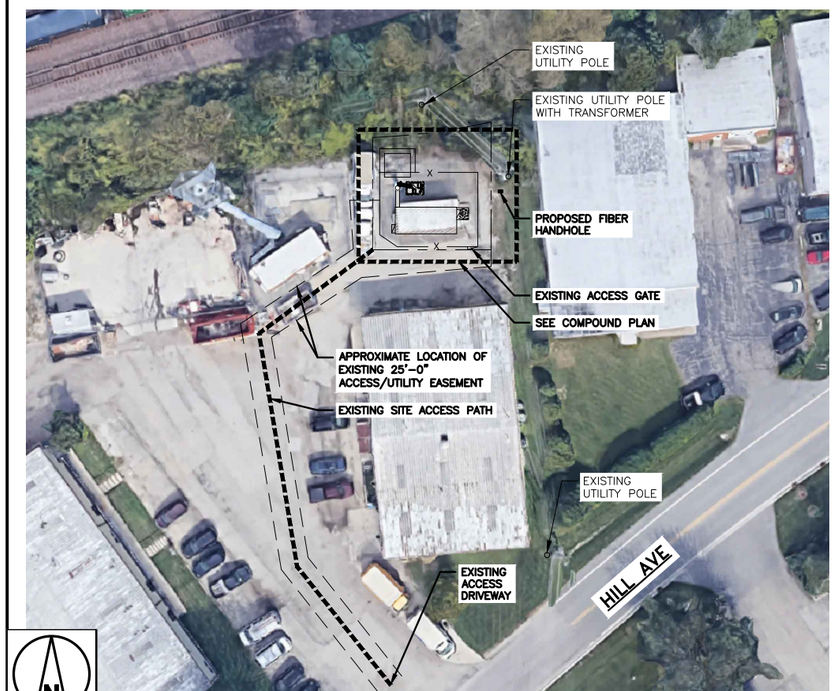

SITE PLAN

32' 24' 16' 8' 0 32' 64'
1/32"=1'-0"

3

dish wireless.
5701 SOUTH SANTA FE DRIVE
LITTLETON, CO 80120

CROWN CASTLE
2000 CORPORATE DRIVE
CANONSBURG, PA 15317

INFINIGY
FROM ZERO TO INFINIGY
the solutions are endless
500 WEST OFFICE CENTER DRIVE
SUITE 150 | FORT WASHINGTON, PA 19034
WWW.INFINIGY.COM

CHRISTOPHER J. WARREN
062.059402
LICENSED PROFESSIONAL ENGINEER
6/23/22
STATE OF ILLINOIS
EXP. 11/30/23

FIRM REGISTRATION: 184005973-0002

IT IS A VIOLATION OF LAW FOR ANY PERSON, UNLESS THEY ARE ACTING UNDER THE DIRECTION OF A LICENSED PROFESSIONAL ENGINEER, TO ALTER THIS DOCUMENT.

DRAWN BY:	CHECKED BY:	APPROVED BY:
RCD	SS	CJW

RFDS REV #: N/A

CONSTRUCTION DOCUMENTS

SUBMITTALS

REV	DATE	DESCRIPTION
A	06/30/2021	ISSUED FOR REVIEW
0	06/16/2022	ISSUED FOR CONSTRUCTION
1	06/23/2022	ISSUED FOR CONSTRUCTION

A&E PROJECT NUMBER
6039-Z0001-C

DISH Wireless L.L.C.
PROJECT INFORMATION
CHCHI00652A
1102 HILL AVENUE
GLEN ELLYN, IL 60137

SHEET TITLE
OVERALL AND ENLARGED SITE PLAN

SHEET NUMBER
A-1

NOTES

1. CONTRACTOR SHALL FIELD VERIFY ALL DIMENSIONS.
2. ANTENNA SPECIFICATIONS REFER TO ANTENNA SCHEDULE AND TO FINAL CONSTRUCTION RFDS FOR ALL RF DETAILS
3. EXISTING EQUIPMENT AND FENCE OMITTED FOR CLARITY.
4. INFINIGY HAS NOT EVALUATED THE TOWER OR MOUNT STRUCTURE AND ASSUMES NO RESPONSIBILITY FOR THEIR STRUCTURAL INTEGRITY REGARDING PROPOSED LOADINGS. FINAL INSTALLATION SHALL COMPLY WITH RESULTS OF PASSING STRUCTURAL ANALYSES PERFORMED BY OTHERS.

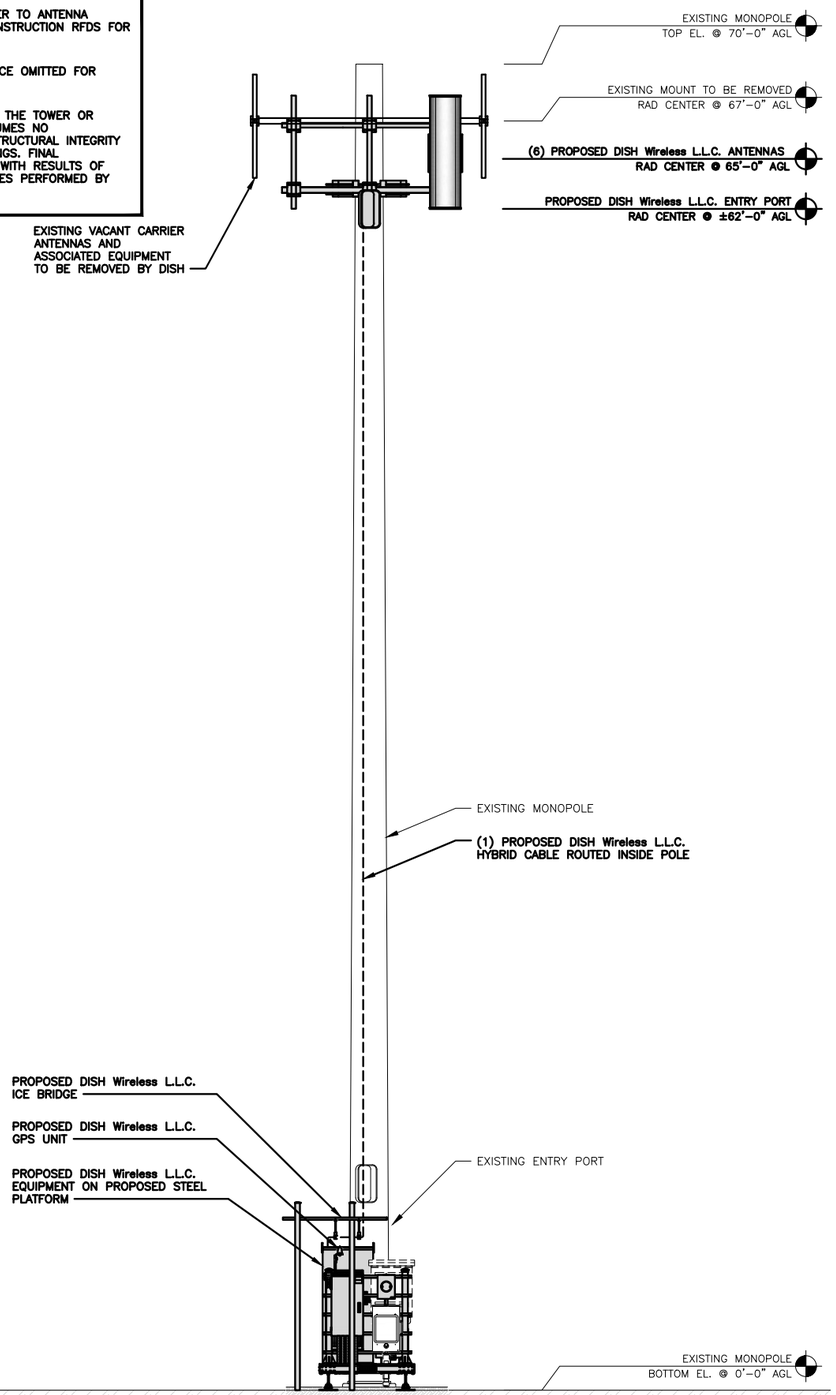

PROPOSED EAST ELEVATION

4' 2' 0 4' 8'
1/4"=1'-0"

1

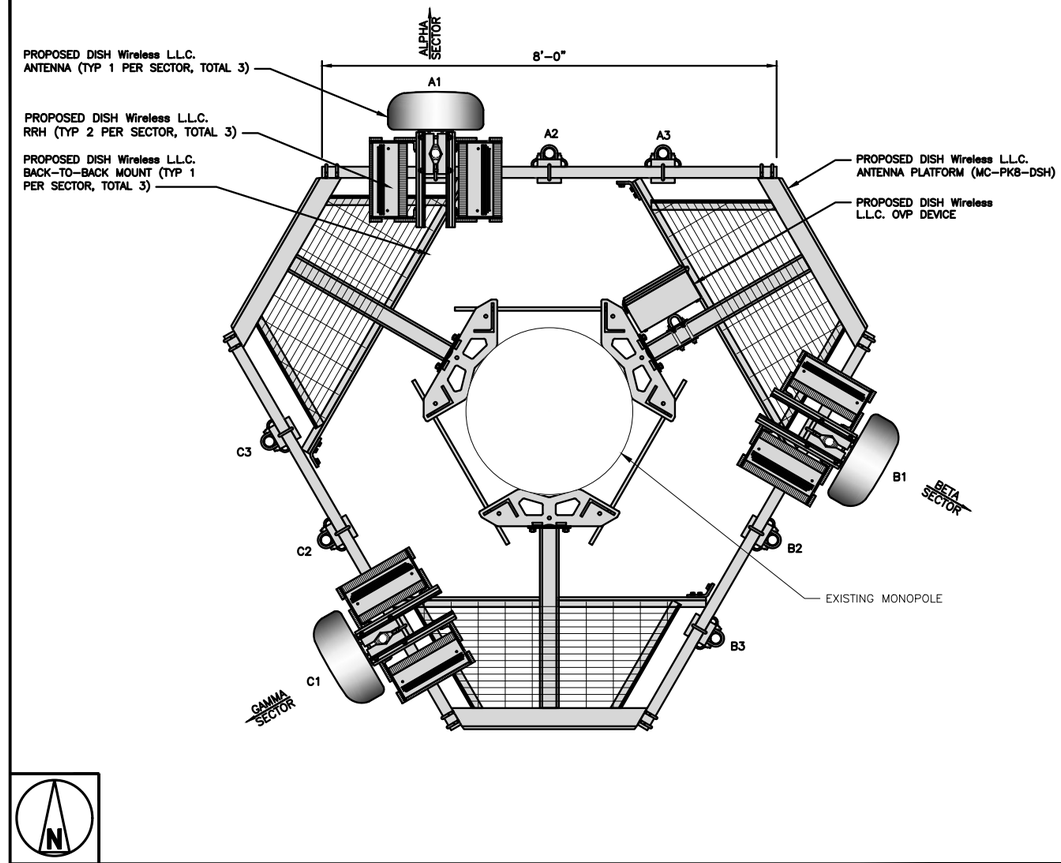

ANTENNA LAYOUT

12" 6" 0 1' 2' 3'
3/4"=1'-0"

2

SECTOR POS.	ANTENNA					TRANSMISSION CABLE	RRH			OVP
	EXISTING OR PROPOSED	MANUFACTURER – MODEL NUMBER	TECH	AZIMUTH	RAD CENTER	FEED LINE TYPE AND LENGTH	MANUFACTURER – MODEL NUMBER	TECH	POS.	MANUFACTURER MODEL
A1	PROPOSED	JMA WIRELESS – MX08FRO665-21	5G	0°	65'-0"	(1) HIGH-CAPACITY HYBRID CABLE (100' LONG)	FUJITSU – TA08025-B604	5G	A1	RAYCAP RDIDC-9181-PF-48
A2	–	--	--	--	--		FUJITSU – TA08025-B605	5G	A1	
A3	--	--	--	--	--		--	--	--	
B1	PROPOSED	JMA WIRELESS – MX08FRO665-21	5G	120°	65'-0"	SHARED W/ALPHA	FUJITSU – TA08025-B604	5G	B1	SHARED W/ALPHA
B2	--	--	--	--	--		FUJITSU – TA08025-B605	5G	B1	
B3	--	--	--	--	--		--	--	--	
C1	PROPOSED	JMA WIRELESS – MX08FRO665-21	5G	240°	65'-0"	SHARED W/ALPHA	FUJITSU – TA08025-B604	5G	C1	SHARED W/ALPHA
C2	--	--	--	--	--		FUJITSU – TA08025-B605	5G	C1	
C3	--	--	--	--	--		--	--	--	

NOTES

1. CONTRACTOR TO REFER TO FINAL CONSTRUCTION RFDS FOR ALL RF DETAILS.
2. ANTENNA AND RRH MODELS MAY CHANGE DUE TO EQUIPMENT AVAILABILITY. ALL EQUIPMENT CHANGES MUST BE APPROVED AND REMAIN IN COMPLIANCE WITH THE PROPOSED DESIGN AND STRUCTURAL ANALYSES.

ANTENNA SCHEDULE

NO SCALE

3

dish wireless.
5701 SOUTH SANTA FE DRIVE
LITTLETON, CO 80120

CROWN CASTLE
2000 CORPORATE DRIVE
CANONSBURG, PA 15317

INFINIGY
FROM ZERO TO INFINIGY
the solutions are endless
500 WEST OFFICE CENTER DRIVE
SUITE 150 | FORT WASHINGTON, PA 19034
WWW.INFINIGY.COM

CHRISTOPHER J. WARREN
062.059402
LICENSED PROFESSIONAL ENGINEER
6/23/22
STATE OF ILLINOIS
EXP. 11/30/23

FIRM REGISTRATION: 184005973-0002

IT IS A VIOLATION OF LAW FOR ANY PERSON, UNLESS THEY ARE ACTING UNDER THE DIRECTION OF A LICENSED PROFESSIONAL ENGINEER, TO ALTER THIS DOCUMENT.

DRAWN BY:	CHECKED BY:	APPROVED BY:
RCD	SS	CJW

RFDS REV #: N/A

CONSTRUCTION DOCUMENTS

SUBMITTALS

REV	DATE	DESCRIPTION
A	06/30/2021	ISSUED FOR REVIEW
0	06/16/2022	ISSUED FOR CONSTRUCTION
1	06/23/2022	ISSUED FOR CONSTRUCTION

A&E PROJECT NUMBER
6039-Z0001-C

DISH Wireless L.L.C. PROJECT INFORMATION
CHCHI00652A
1102 HILL AVENUE
GLEN ELLYN, IL 60137

SHEET TITLE
ELEVATION, ANTENNA LAYOUT AND SCHEDULE

SHEET NUMBER
A-2

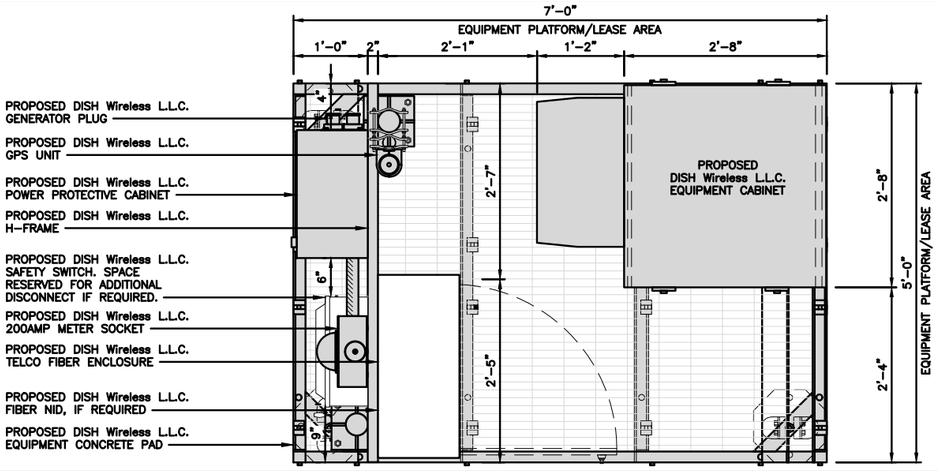

PLATFORM EQUIPMENT PLAN

12" 9" 6" 3" 0 1' 2'
1"=1'-0"

1

COMMSCOPE MTC4045LP 5X7 PLATFORM	
DIMENSIONS (HxWxD)	16"x84"x60"
TOTAL WEIGHT	423 LBS

NOTE:
GC TO PROVIDE EXTENDED THREAD FOR PLATFORM IF REQUIRED HEIGHT EXCEEDS 17"

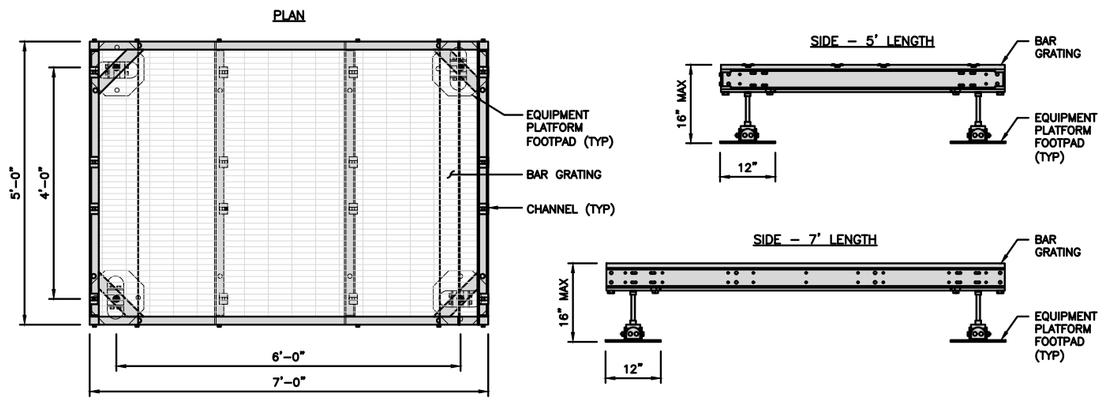

PLATFORM DETAIL

NO SCALE

3

COMMSCOPE MTC4045HFLD H-FRAME	
UNISTRUT/SUPPORT RAILS QTY	5
WEIGHT	59.74 lbs

NOTE:
OR DISH Wireless L.L.C. APPROVED EQUIVALENT

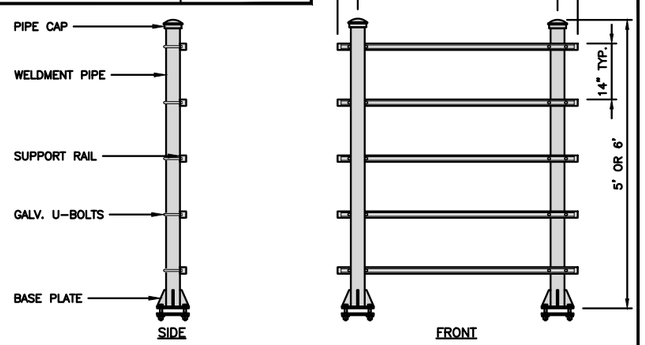

H-FRAME DETAIL

NO SCALE

4

NOT USED

NO SCALE

5

NOTES

1. CONTRACTOR TO BURY PLATFORM FEET WITH A MINIMUM OF 2" OF FILL PER EXISTING SITE SURFACE
2. WEED BARRIER FABRIC TO BE ADDED AT DISCRETION OF DISH Wireless L.L.C. CONSTRUCTION MANAGER AT TIME OF CONSTRUCTION. ONE SHEET 8'x8' INSTALLED UNDER ALL FOUR FEET OF THE PLATFORM (4 MIL BLACK PLASTIC)
3. EQUIPMENT CABINET OMITTED FOR CLARITY

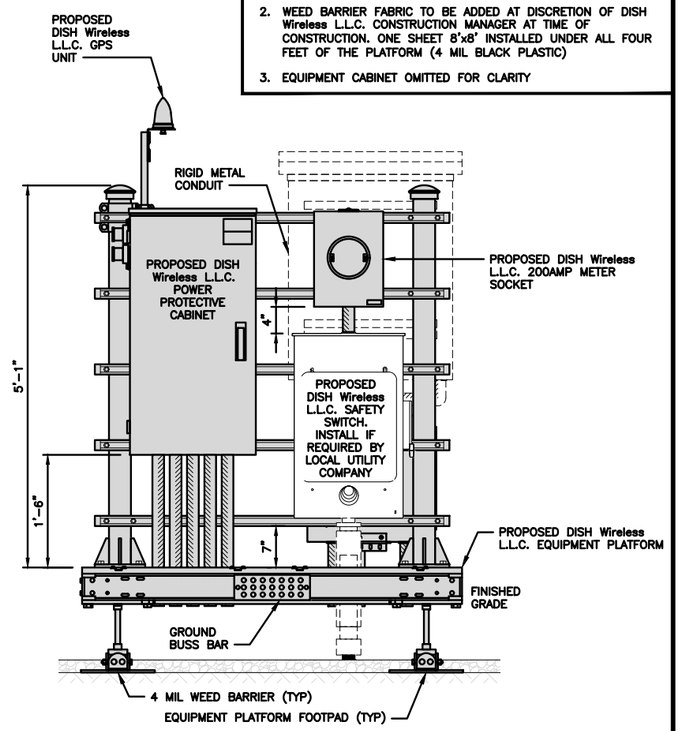

FRONT ELEVATION

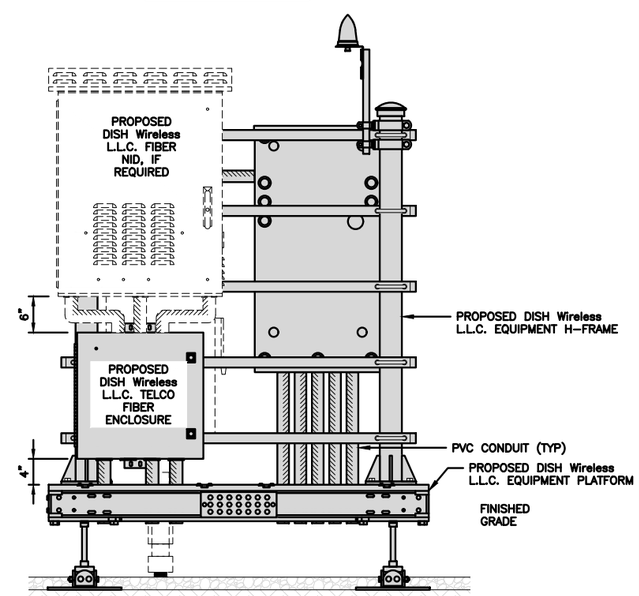

BACK ELEVATION

H-FRAME EQUIPMENT ELEVATION

12" 9" 6" 3" 0 1' 2'
1"=1'-0"

5

dish wireless
5701 SOUTH SANTA FE DRIVE
LITTLETON, CO 80120

CROWN CASTLE
2000 CORPORATE DRIVE
CANONSBURG, PA 15317

INFINIGY
FROM ZERO TO INFINIGY
the solutions are endless
500 WEST OFFICE CENTER DRIVE
SUITE 150 | FORT WASHINGTON, PA 19034
WWW.INFINIGY.COM

CHRISTOPHER J. WARREN
062.059402
LICENSED PROFESSIONAL ENGINEER
6/23/22
STATE OF ILLINOIS
EXP. 11/30/23

FIRM REGISTRATION: 184005973-0002

IT IS A VIOLATION OF LAW FOR ANY PERSON, UNLESS THEY ARE ACTING UNDER THE DIRECTION OF A LICENSED PROFESSIONAL ENGINEER, TO ALTER THIS DOCUMENT.

DRAWN BY:	CHECKED BY:	APPROVED BY:
RCD	SS	CJW

RFDS REV #: N/A

CONSTRUCTION DOCUMENTS

SUBMITTALS

REV	DATE	DESCRIPTION
A	06/30/2021	ISSUED FOR REVIEW
0	06/16/2022	ISSUED FOR CONSTRUCTION
1	06/23/2022	ISSUED FOR CONSTRUCTION

A&E PROJECT NUMBER
6039-Z0001-C

DISH Wireless L.L.C.
PROJECT INFORMATION
CHCHI00652A
1102 HILL AVENUE
GLEN ELLYN, IL 60137

SHEET TITLE
EQUIPMENT PLATFORM AND H-FRAME DETAILS

SHEET NUMBER
A-3

ENERSYS HEX 20000059996	
DIMENSIONS (HxWxD)	73"x30"x32"
POWER SYSTEM	-48V ALPHA/600A
HEATER	800W
TOTAL WEIGHT (EMPTY)	376 lbs

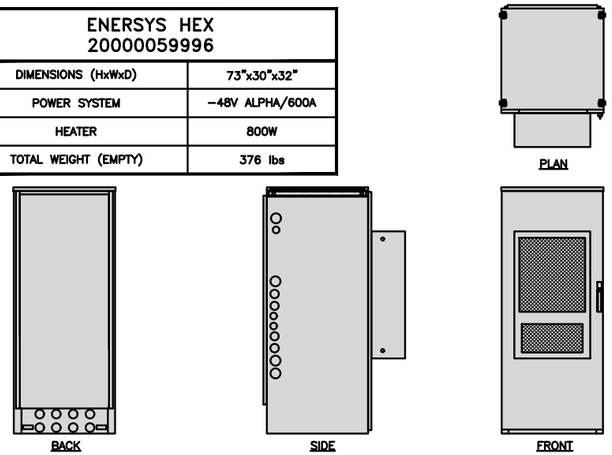

CABINET DETAIL — NO SCALE — 1

RAYCAP PPC RDIAC-2465-P-240-MTS	
ENCLOSURE DIMENSIONS (HxWxD):	39"x22.855"x12.593
WEIGHT:	80 lbs
OPERATING AC VOLTAGE	240/120 1 PHASE 3W+G

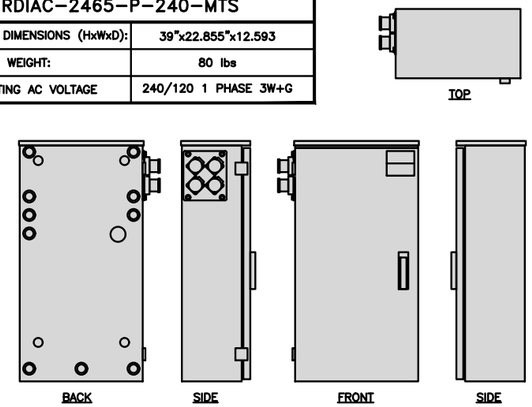

POWER PROTECTION CABINET (PPC) DETAIL — NO SCALE — 2

SQUARE D SAFETY SWITCHES D224NRB	
ENCLOSURE DIM (HxWxD)	29.25"x19.00"x8.50"
ENCLOSURE TYPE	NEMA 3R RAINPROOF
UL LISTED	FILE E-2875

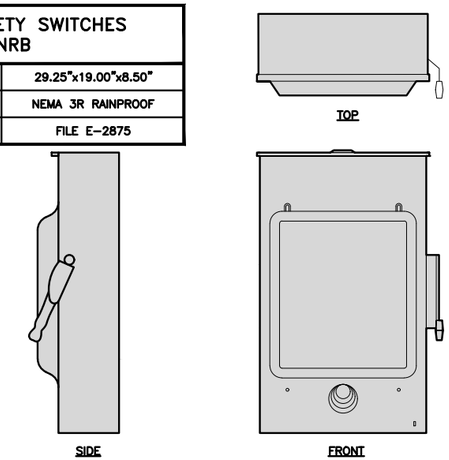

SAFETY SWITCH DETAIL — NO SCALE — 3

EATON METER SOCKET UNRRS213BEUSE	
METER SOCKET TYPE	RING
ENCLOSURE DIM (HxWxD)	16"x12"x6"
MAIN AMPERE RATING	200A
WEIGHT	18 LBS

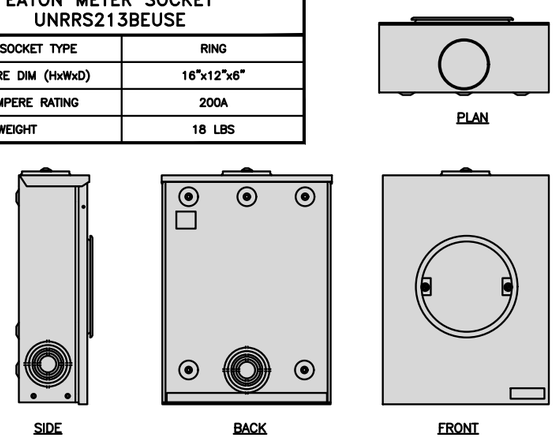

METERNSOCKETDETAIL — NO SCALE — 4

ZAYO 5RU (LEFT SWING DOOR) FIBER NID ENCLOSURE	
DIMENSIONS (HxWxD)	36.1"x29"x12.9"
WEIGHT	85 lbs

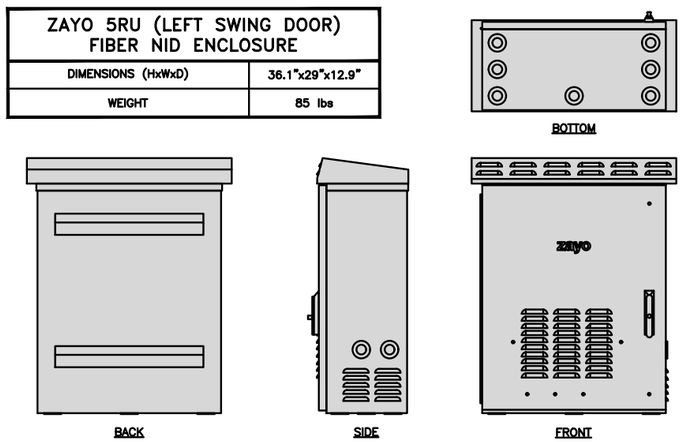

FIBER NID ENCLOSURE DETAIL — NO SCALE — 5

CHARLES CFIT-PF2020DSH1 FIBER TELCO ENCLOSURE	
ENCLOSURE DIMS (HxWxD)	20"x20"x9"
ENCLOSURE WEIGHT	20 lbs
MOUNTING	WALL
COMPLIANCE	TYPE 4

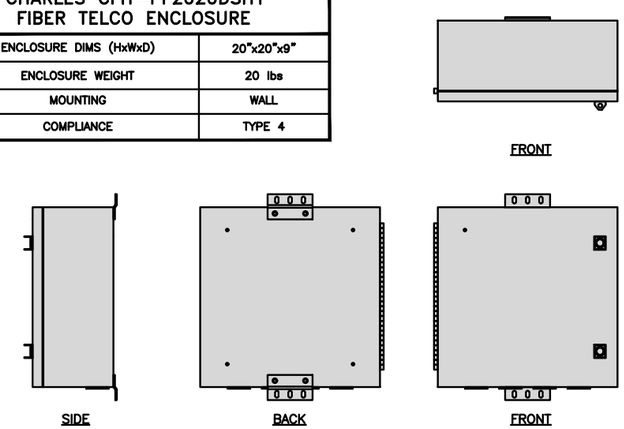

FIBER TELCO ENCLOSURE DETAIL — NO SCALE — 6

COMMSCOPE WB-K110-B WAVEGUIDE BRIDGE KIT	
DIMENSIONS (HxL)	160"x10'
WEIGHT/ VOLUME	325.0 LBS
CABLE RUN (QTY)	12

INCLUDED PRODUCTS:	
	WB-T12-3 TRAPEZE KIT, 3 RUNGS
	WB-LB12-3 SUPPORT BRACKET
	MF-130 DIRECT BURIAL PIPE COLUMN, 13'-4"

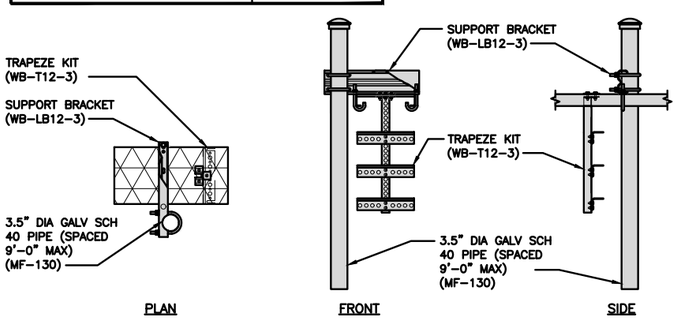

ICE BRIDGE DETAIL — NO SCALE — 7

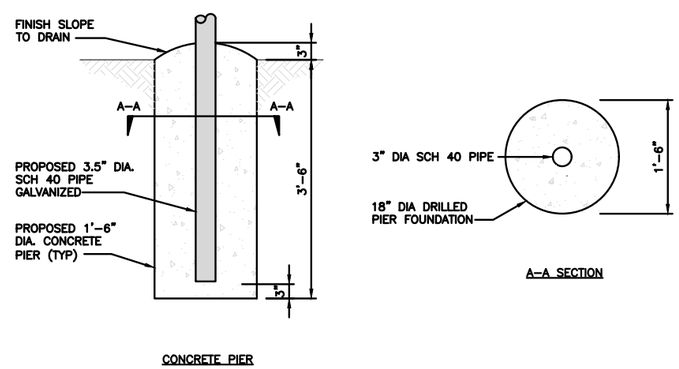

TYPICAL ICE BRIDGE CONCRETE PIER DETAIL — NO SCALE — 8

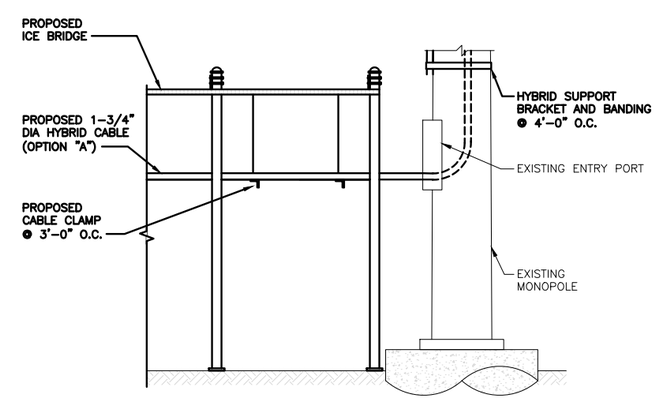

HYBRID CABLE RUN — NO SCALE — 9

dish wireless.

5701 SOUTH SANTA FE DRIVE
LITTLETON, CO 80120

CROWN CASTLE

2000 CORPORATE DRIVE
CANONSBURG, PA 15317

INFINIGY

FROM ZERO TO INFINIGY

the solutions are endless

500 WEST OFFICE CENTER DRIVE
SUITE 150 | FORT WASHINGTON, PA 19034
WWW.INFINIGY.COM

CHRISTOPHER J. WARREN
062.059402
LICENSED PROFESSIONAL ENGINEER
6/23/22
STATE OF ILLINOIS
EXP. 11/30/23

FIRM REGISTRATION: 184005973-0002

IT IS A VIOLATION OF LAW FOR ANY PERSON, UNLESS THEY ARE ACTING UNDER THE DIRECTION OF A LICENSED PROFESSIONAL ENGINEER, TO ALTER THIS DOCUMENT.

DRAWN BY:	CHECKED BY:	APPROVED BY:
RCD	SS	CJW

RFDS REV #: N/A

CONSTRUCTION DOCUMENTS

SUBMITTALS

REV	DATE	DESCRIPTION
A	06/30/2021	ISSUED FOR REVIEW
0	06/16/2022	ISSUED FOR CONSTRUCTION
1	06/23/2022	ISSUED FOR CONSTRUCTION

A&E PROJECT NUMBER

6039-Z0001-C

DISH Wireless L.L.C. PROJECT INFORMATION

CHCHI00652A

1102 HILL AVENUE
GLEN ELLYN, IL 60137

SHEET TITLE

EQUIPMENT DETAILS

SHEET NUMBER

A-4

PCTEL GPSGL-TMG-SPI-40NCB	
DIMENSIONS (DIAxH) MM/INCH	81x184mm 3.2"x7.25"
WEIGHT W/ACCESSORIES	075 lbs
CONNECTOR	N-FEMALE
FREQUENCY RANGE	1590 ± 30MHz

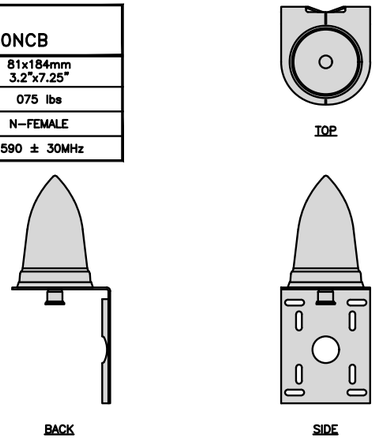

GPS DETAIL | NO SCALE | 1

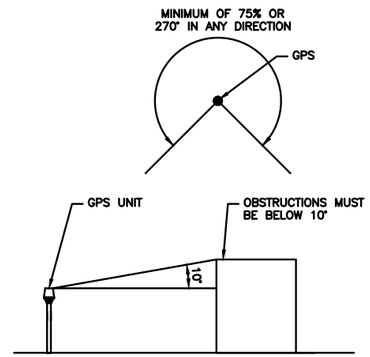

GPS MINIMUM SKY VIEW REQUIREMENTS | NO SCALE | 2

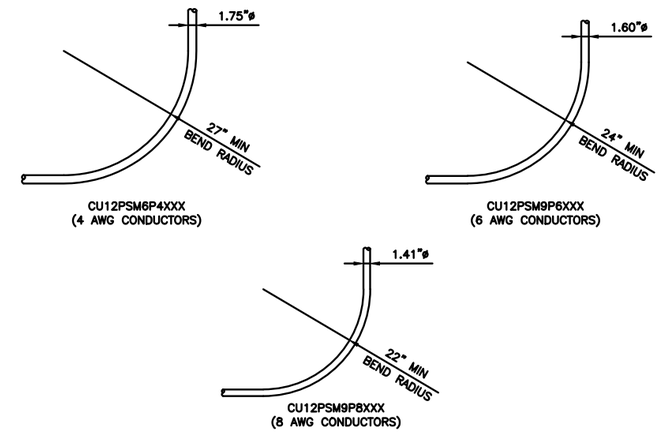

CABLES UNLIMITED HYBRID CABLE MINIMUM BEND RADIUSES | NO SCALE | 3

NOT USED | NO SCALE | 4

NOT USED | NO SCALE | 5

NOT USED | NO SCALE | 6

NOT USED | NO SCALE | 7

NOT USED | NO SCALE | 8

NOT USED | NO SCALE | 9

dish wireless
5701 SOUTH SANTA FE DRIVE
LITTLETON, CO 80120

CROWN CASTLE
2000 CORPORATE DRIVE
CANONSBURG, PA 15317

INFINIGY
FROM ZERO TO INFINIGY
the solutions are endless
500 WEST OFFICE CENTER DRIVE
SUITE 150 | FORT WASHINGTON, PA 19034
WWW.INFINIGY.COM

CHRISTOPHER J. WARREN
062.059402
LICENSED
PROFESSIONAL
ENGINEER
6/23/22
STATE OF ILLINOIS
EXP. 11/30/23

FIRM REGISTRATION: 184005973-0002

IT IS A VIOLATION OF LAW FOR ANY PERSON, UNLESS THEY ARE ACTING UNDER THE DIRECTION OF A LICENSED PROFESSIONAL ENGINEER, TO ALTER THIS DOCUMENT.

DRAWN BY:	CHECKED BY:	APPROVED BY:
RCD	SS	CJW

RFDS REV #: N/A

CONSTRUCTION DOCUMENTS

SUBMITTALS

REV	DATE	DESCRIPTION
A	06/30/2021	ISSUED FOR REVIEW
0	06/16/2022	ISSUED FOR CONSTRUCTION
1	06/23/2022	ISSUED FOR CONSTRUCTION

A&E PROJECT NUMBER
6039-Z0001-C

DISH Wireless L.L.C. PROJECT INFORMATION
CHCHI00652A
1102 HILL AVENUE
GLEN ELLYN, IL 60137

SHEET TITLE
EQUIPMENT DETAILS

SHEET NUMBER
A-5

FUJITSU TRIPLE BAND TA08025-B605	
DIMENSIONS (HxWxD)	14.9"x15.7"x9"
WEIGHT	74.95 lbs
CONNECTOR TYPE	4.3-10 RF CONNECTOR
POWER SUPPLY	DC -58~-36V

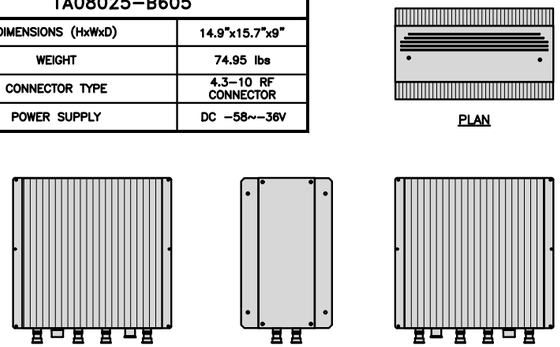

RRH DETAIL — NO SCALE — 1

FUJITSU DUAL BAND TA08025-B604	
DIMENSIONS (HxWxD)	14.9"x15.7"x7.8"
WEIGHT	63.9 lbs
CONNECTOR TYPE	4.3-10 RF CONNECTOR
POWER SUPPLY	DC -58~-36V

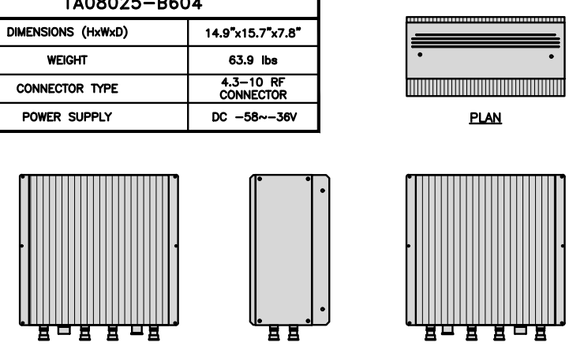

RRH DETAIL — NO SCALE — 2

SABRE DOUBLE Z-BRACKET C10123155	
DIMENSIONS (HxWxD) (1 BRACKET)	5"x20"x1-13/16"
WEIGHT (FULL ASSEMBLY)	35.79 lbs
PACKAGE QUANTITY	4

#	DESCRIPTION
1	PLATE, CHANNEL BRACKET
2	RRH Z BRACKET, 3/16"
3	THREADED ROD ASSEMBLY 1/2"x12"

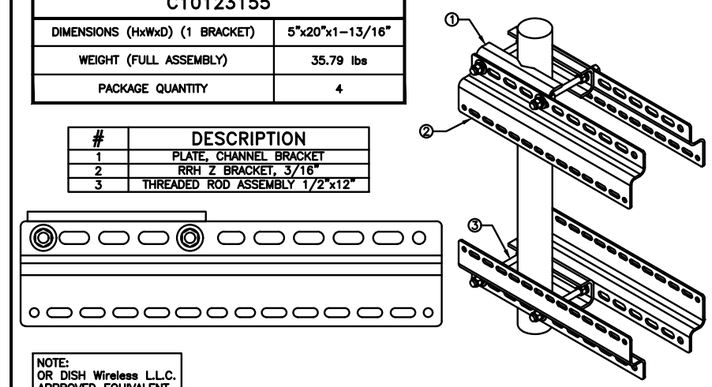

NOTE:
OR DISH Wireless L.L.C.
APPROVED EQUIVALENT

RRH MOUNT DETAIL — NO SCALE — 3

RAYCAP RDIDC-9181-PF-48 DC SURGE PROTECTION (OVP)	
DIMENSIONS (HxWxD)	18.98"x14.39"x8.15"
WEIGHT	21.82 LBS

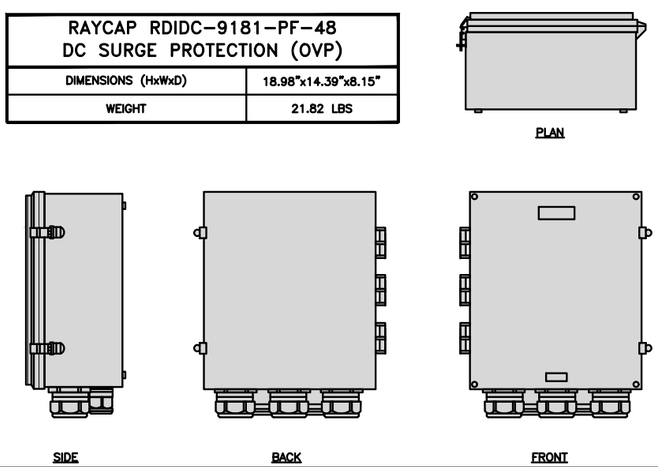

SURGE SUPPRESSION DETAIL (OVP) — NO SCALE — 4

JMA MX08FR0665-21	
DIMENSIONS (HxWxD)	72"x20.0"x8.0"
RF PORTS, CONNECTOR TYPE	8 x 4.3-10 FEMALE
WEIGHT	64.5 lbs
WEIGHT WITH BRACKETS	82.5 lbs

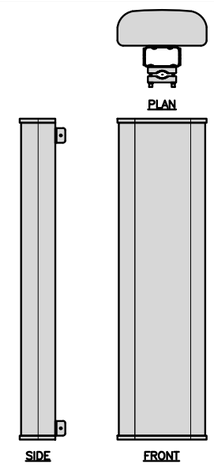

ANTENNA DETAIL — NO SCALE — 5

JMA ANTENNA MOUNT BRACKET #91900318	
TOTAL WEIGHT (WITH BRACKETS)	18 lbs (8.18 Kg)
POLE DIAMETER RANGE	2.5" TO 4.5"

NOTE:
KIT #91900318: TOP AND BOTTOM BRACKETS FOR 4-,6-, AND 8-FOOT ANTENNAS

ANTENNA BRACKET NOT PART OF KIT

NOTE:
OR DISH Wireless L.L.C.
APPROVED EQUIVALENT

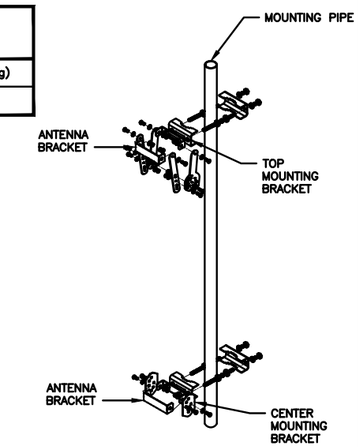

ANTENNA BRACKET DETAIL — NO SCALE — 6

COMMSCOPE XP-2040 CROSSOVER PLATE	
DIMENSIONS (HxW)	10"x12"
WEIGHT	11 lbs

NOTE:
OR DISH Wireless L.L.C.
APPROVED EQUIVALENT

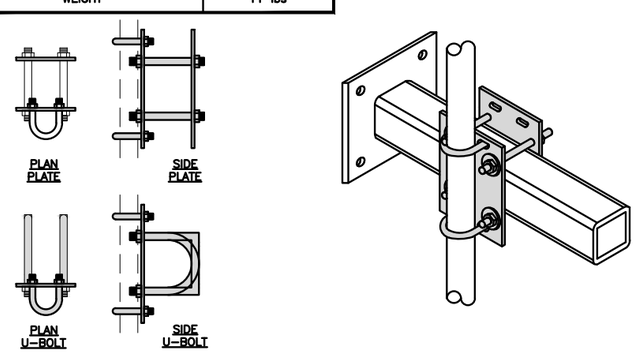

RRH/OVP MOUNT DETAIL — NO SCALE — 7

COMMSCOPE MC-PK8-DSH	
FACE WIDTH	96"
WEIGHT	1373.08 lbs
NOTE: 15" TO 38" O.D.	

NOTE:
OR DISH Wireless L.L.C.
APPROVED EQUIVALENT

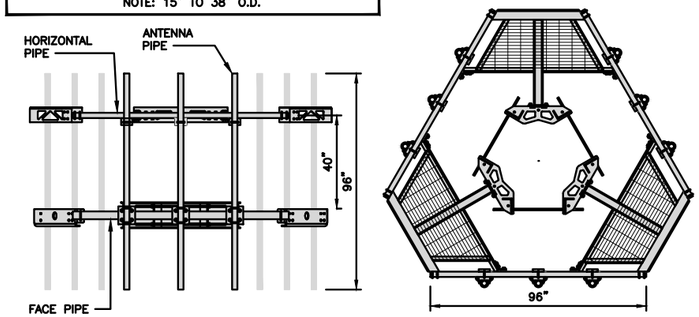

ANTENNA PLATFORM DETAIL — NO SCALE — 8

NOT USED — NO SCALE — 9

dish wireless.
5701 SOUTH SANTA FE DRIVE
LITTLETON, CO 80120

CROWN CASTLE
2000 CORPORATE DRIVE
CANONSBURG, PA 15317

INFINIGY
FROM ZERO TO INFINIGY
the solutions are endless
500 WEST OFFICE CENTER DRIVE
SUITE 150 | FORT WASHINGTON, PA 19034
WWW.INFINIGY.COM

CHRISTOPHER J. WARREN
062.059402
LICENSED PROFESSIONAL ENGINEER
6/23/22
STATE OF ILLINOIS
EXP. 11/30/23
FIRM REGISTRATION: 184005973-0002

IT IS A VIOLATION OF LAW FOR ANY PERSON, UNLESS THEY ARE ACTING UNDER THE DIRECTION OF A LICENSED PROFESSIONAL ENGINEER, TO ALTER THIS DOCUMENT.

DRAWN BY:	CHECKED BY:	APPROVED BY:
RCD	SS	CJW

RFDS REV #: N/A

CONSTRUCTION DOCUMENTS

SUBMITTALS

REV	DATE	DESCRIPTION
A	06/30/2021	ISSUED FOR REVIEW
0	06/16/2022	ISSUED FOR CONSTRUCTION
1	06/23/2022	ISSUED FOR CONSTRUCTION

A&E PROJECT NUMBER
6039-Z0001-C

DISH Wireless L.L.C. PROJECT INFORMATION
CHCHI00652A
1102 HILL AVENUE
GLEN ELLYN, IL 60137

SHEET TITLE
EQUIPMENT DETAILS

SHEET NUMBER
A-6

NOTES

1. CONTRACTOR SHALL FIELD VERIFY ALL PROPOSED UNDERGROUND UTILITY CONDUIT ROUTE.
2. ANTENNAS AND MOUNTS OMITTED FOR CLARITY.
3. DUE TO UTILITY EASEMENT RIGHTS SPECIFIED IN THE GROUND LEASE, CUSTOMER MAY INSTALL EQUIPMENT WITHIN SPECIFIED UTILITY EASEMENT AREA. "PWR" AND "FBR" PATH DEPICTED ON A–1 AND E–1 REPRESENT PLANNED ROUTING BASED ON BEST AVAILABLE INFORMATION INCLUDING BUT NOT LIMITED TO A SURVEY, EXHIBITS, METES AND BOUNDS OF THE UTILITY EASEMENT, FIELD VERIFICATION, PRIOR PROJECT DOCUMENTATION AND OTHER REAL PROPETY RIGHTS DOCUMENTS. WHEN INSTALLING THE UTILITIES PLEASE LOCATE AND FOLLOW EXISTING PATH. IF EXISTING PATH IS MATERIALLY INCONSISTENT WITH "PWR" AND "FBR" PATH DEPICTED ON A–1 AND E–1 AND SAID VARIANCE IS NOT NOTED ON CDs, PLEASE NOTIFY TOWER OWNER AS FURTHER COORDINATION MAY BE NEEDED.

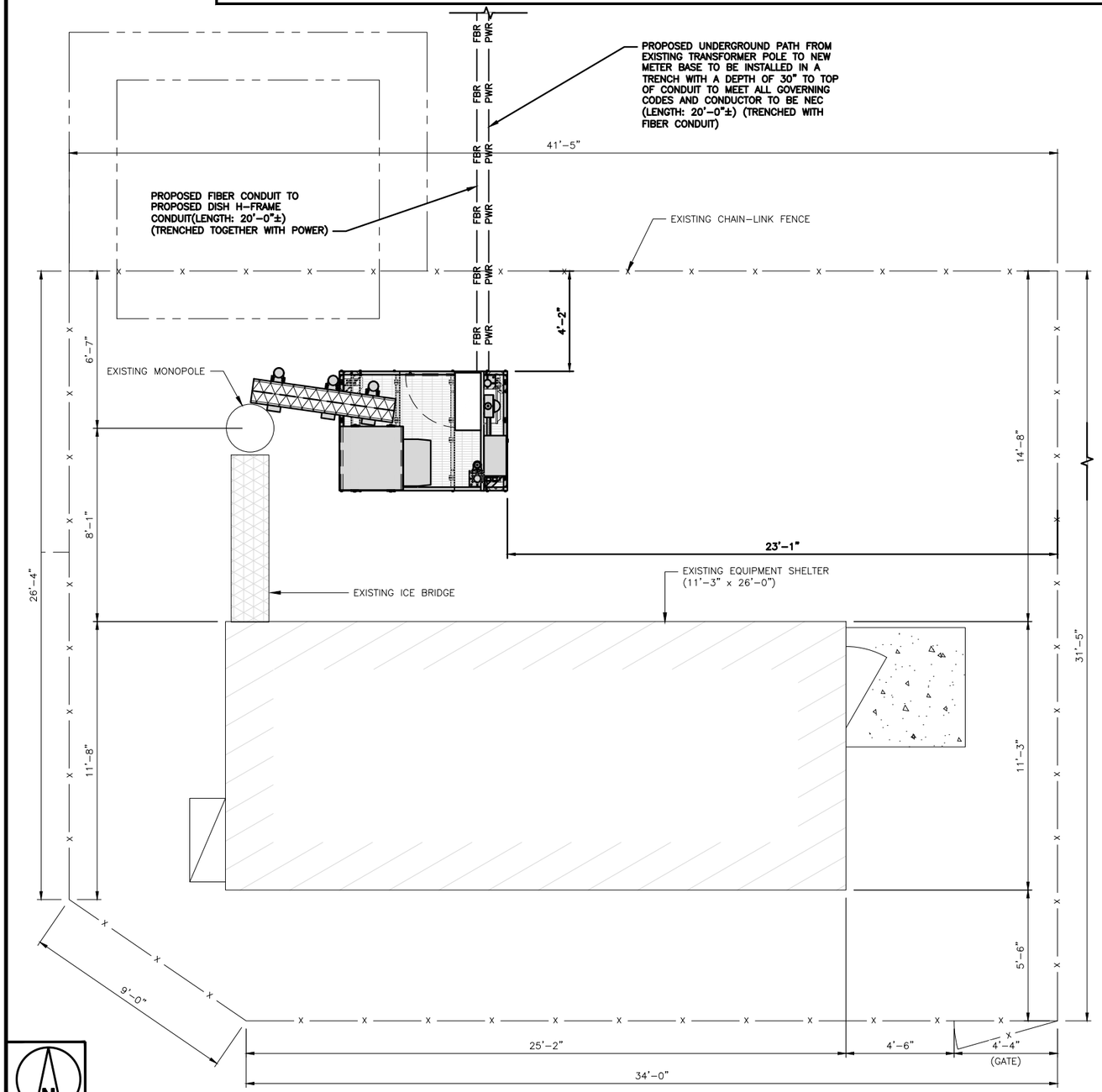

UTILITY ROUTE PLAN

12" 6" 0 1' 2' 3' 4' 5' 6' 7'
3/8"=1'–0"

1

DC POWER WIRING SHALL BE COLOR CODED AT EACH END FOR IDENTIFYING +24V AND –48V CONDUCTORS. RED MARKINGS SHALL IDENTIFY +24V AND BLUE MARKINGS SHALL IDENTIFY –48V.

1. CONTRACTOR SHALL INSPECT THE EXISTING CONDITIONS PRIOR TO SUBMITTING A BID. ANY QUESTIONS ARISING DURING THE BID PERIOD IN REGARDS TO THE CONTRACTOR'S FUNCTIONS, THE SCOPE OF WORK, OR ANY OTHER ISSUE RELATED TO THIS PROJECT SHALL BE BROUGHT UP DURING THE BID PERIOD WITH THE PROJECT MANAGER FOR CLARIFICATION, NOT AFTER THE CONTRACT HAS BEEN AWARDED.
2. ALL ELECTRICAL WORK SHALL BE DONE IN ACCORDANCE WITH CURRENT NATIONAL ELECTRICAL CODES AND ALL STATE AND LOCAL CODES, LAWS, AND ORDINANCES. PROVIDE ALL COMPONENTS AND WIRING SIZES AS REQUIRED TO MEET NEC STANDARDS.
3. LOCATION OF EQUIPMENT, CONDUIT AND DEVICES SHOWN ON THE DRAWINGS ARE APPROXIMATE AND SHALL BE COORDINATED WITH FIELD CONDITIONS PRIOR TO CONSTRUCTION.
4. CONDUIT ROUGH–IN SHALL BE COORDINATED WITH THE MECHANICAL EQUIPMENT TO AVOID LOCATION CONFLICTS. VERIFY WITH THE MECHANICAL EQUIPMENT CONTRACTOR AND COMPLY AS REQUIRED.
5. CONTRACTOR SHALL PROVIDE ALL BREAKERS, CONDUITS AND CIRCUITS AS REQUIRED FOR A COMPLETE SYSTEM.
6. CONTRACTOR SHALL PROVIDE PULL BOXES AND JUNCTION BOXES AS REQUIRED BY THE NEC ARTICLE 314.
7. CONTRACTOR SHALL PROVIDE ALL STRAIN RELIEF AND CABLE SUPPORTS FOR ALL CABLE ASSEMBLIES. INSTALLATION SHALL BE IN ACCORDANCE WITH MANUFACTURER'S SPECIFICATIONS AND RECOMMENDATIONS.
8. ALL DISCONNECTS AND CONTROLLING DEVICES SHALL BE PROVIDED WITH ENGRAVED PHENOLIC NAMEPLATES INDICATING EQUIPMENT CONTROLLED, BRANCH CIRCUITS INSTALLED ON, AND PANEL FIELD LOCATIONS FED FROM.
9. INSTALL AN EQUIPMENT GROUNDING CONDUCTOR IN ALL CONDUITS PER THE SPECIFICATIONS AND NEC 250. THE EQUIPMENT GROUNDING CONDUCTORS SHALL BE BONDED AT ALL JUNCTION BOXES, PULL BOXES, AND ALL DISCONNECT SWITCHES, AND EQUIPMENT CABINETS.
10. ALL NEW MATERIAL SHALL HAVE A U.L. LABEL.
11. PANEL SCHEDULE LOADING AND CIRCUIT ARRANGEMENTS REFLECT POST–CONSTRUCTION EQUIPMENT.
12. CONTRACTOR SHALL BE RESPONSIBLE FOR AS–BUILT PANEL SCHEDULE AND SITE DRAWINGS.
13. ALL TRENCHES IN COMPOUND TO BE HAND DUG

ELECTRICAL NOTES

NO SCALE

2

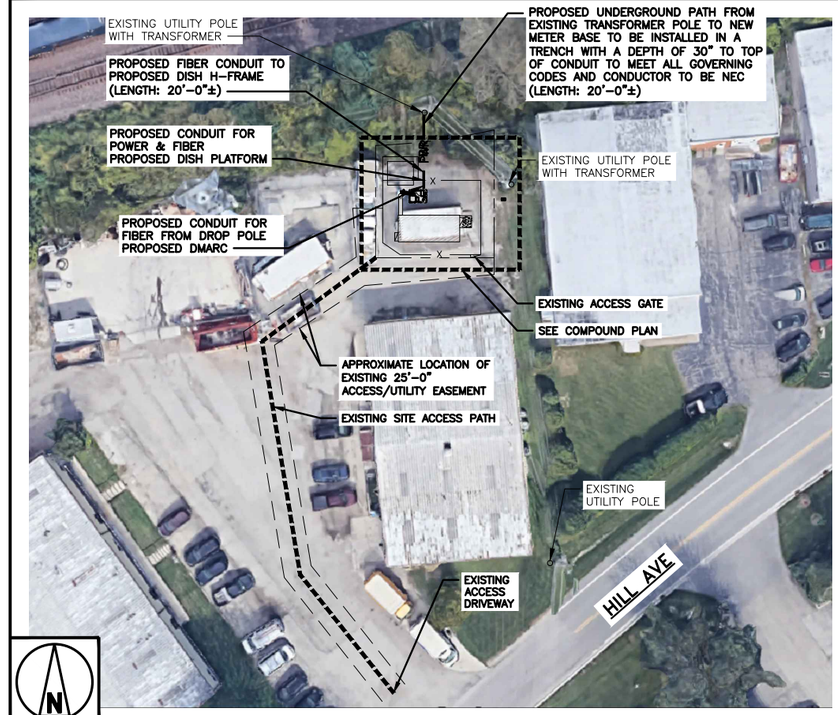

OVERALL UTILITY ROUTE PLAN

32' 24' 16' 8' 0 32' 64'
1/32"=1'–0"

3

dish wireless.
5701 SOUTH SANTA FE DRIVE
LITTLETON, CO 80120

CROWN CASTLE
2000 CORPORATE DRIVE
CANONSBURG, PA 15317

INFINIGY
FROM ZERO TO INFINIGY
the solutions are endless
500 WEST OFFICE CENTER DRIVE
SUITE 150 I FORT WASHINGTON, PA 19034
WWW.INFINIGY.COM

CHRISTOPHER J. WARREN
062.059402
LICENSED PROFESSIONAL ENGINEER
6/23/22
STATE OF ILLINOIS
EXP. 11/30/23

FIRM REGISTRATION: 184005973–0002

IT IS A VIOLATION OF LAW FOR ANY PERSON, UNLESS THEY ARE ACTING UNDER THE DIRECTION OF A LICENSED PROFESSIONAL ENGINEER, TO ALTER THIS DOCUMENT.

DRAWN BY:	CHECKED BY:	APPROVED BY:
RCD	SS	CJW

RFDS REV #: N/A

CONSTRUCTION DOCUMENTS

SUBMITTALS

REV	DATE	DESCRIPTION
A	06/30/2021	ISSUED FOR REVIEW
0	08/16/2022	ISSUED FOR CONSTRUCTION
1	08/23/2022	ISSUED FOR CONSTRUCTION

A&E PROJECT NUMBER
6039–Z0001–C

DISH Wireless L.L.C. PROJECT INFORMATION
CHCHI00652A
1102 HILL AVENUE
GLEN ELLYN, IL 60137

SHEET TITLE
ELECTRICAL/FIBER ROUTE PLAN AND NOTES

SHEET NUMBER
E-1

RECEIVED

JUL 14 2022

VILLAGE OF GLEN ELLYN

Date: **August 19, 2021**

MORRISON HERSHFIELD

Morrison Hershfield
1455 Lincoln Parkway, Suite 500
Atlanta, GA 30346
(770) 379-8500

Subject:	**Structural Analysis Report**	
Carrier Designation:	***DISH Network* Co-Locate**	
	Site Number:	CHCHI00652A
	Site Name:	IL-CCI-T-817173
Crown Castle Designation:	**BU Number:**	817173
	Site Name:	LOMBARD
	JDE Job Number:	669731
	Work Order Number:	1981651
	Order Number:	570902 Rev. 2
Engineering Firm Designation:	**Morrison Hershfield Project Number:** CN0-915R2 / 2101398	
Site Data:	**1102 Hill Avenue, Glen Elly, DuPage County, IL 60137** **Latitude *41° 52' 59.17"*, Longitude *-88° 2' 16.85"*** **70 Foot – Valmont Monopole Tower**	

Morrison Hershfield is pleased to submit this **"Structural Analysis Report"** to determine the structural integrity of the above-mentioned tower.

The purpose of the analysis is to determine acceptability of the tower stress level. Based on our analysis we have determined the tower stress level for the structure and foundation, under the following load case, to be:

LC5: Proposed Equipment Configuration **Sufficient Capacity**

This analysis utilizes an ultimate 3-second gust wind speed of 115 mph as required by the 2015 International Building Code. Applicable Standard references and design criteria are listed in Section 2 - Analysis Criteria.

Respectfully submitted by:

Yan Wang, S.E. (IL License No.081-007465)
Senior Engineer

LICENSED STRUCTURAL ENGINEER
YAN WANG
081-007465
STATE OF ILLINOIS

Digitally signed by Yan Wang
Date: 2022.08.08 15:43:22-04'00'

LICENSE EXPIRES: 11/30/2022

TABLE OF CONTENTS

1) INTRODUCTION

2) ANALYSIS CRITERIA
Table 1 - Proposed Equipment Configuration
Table 2 – Non-Carrier Equipment To Be Removed
Table 3 – Other Considered Equipment

3) ANALYSIS PROCEDURE
Table 4 - Documents Provided
3.1) Analysis Method
3.2) Assumptions

4) ANALYSIS RESULTS
Table 5 - Section Capacity (Summary)
Table 6 – Tower Component Stresses vs. Capacity – LC5
4.1) Recommendations

5) APPENDIX A
tnxTower Output

6) APPENDIX B
Base Level Drawing

7) APPENDIX C
Additional Calculations

1) INTRODUCTION

This tower is a 70 ft monopole tower designed by Valmont and mapped by P & D Antenna Seri in June of 2004.

2) ANALYSIS CRITERIA

TIA-222 Revision:	TIA-222-H
Risk Category:	II
Wind Speed:	115 mph
Exposure Category:	C
Topographic Factor:	1
Ice Thickness:	1.5 in
Wind Speed with Ice:	40 mph
Service Wind Speed:	60 mph

Table 1 - Proposed Equipment Configuration

Mounting Level (ft)	Center Line Elevation (ft)	Number of Antennas	Antenna Manufacturer	Antenna Model	Number of Feed Lines	Feed Line Size (in)
65.0	65.0	3	fujitsu	TA08025-B604	1	1-3/4
		3	fujitsu	TA08025-B605		
		3	jma wireless	MX08FRO665-21 w/ Mount Pipe		
		1	raycap	RDIDC-9181-PF-48		
		1	-	Commscope MC-PK8-DSH		

Table 2 - Non-Carrier Equipment To Be Removed

Mounting Level (ft)	Center Line Elevation (ft)	Number of Antennas	Antenna Manufacturer	Antenna Model	Number of Feed Lines	Feed Line Size (in)
67.0	67.0	1	-	Platform Mount [LP 604-1]	-	-

Table 3 - Other Considered Equipment

Mounting Level (ft)	Center Line Elevation (ft)	Number of Antennas	Antenna Manufacturer	Antenna Model	Number of Feed Lines	Feed Line Size (in)
67.0	67.0	-	-	-	1	1-5/8

3) ANALYSIS PROCEDURE

Table 4 - Documents Provided

Document	Reference	Source
4-GEOTECHNICAL REPORTS	335704	CCISITES
4-TOWER FOUNDATION DRAWINGS/DESIGN/SPECS	340906	CCISITES
4-TOWER MANUFACTURER DRAWINGS	334706	CCISITES
4-TOWER ELEVATION DRAWINGS	1013239	CCISITES

3.1) Analysis Method

tnxTower (version 8.1.1.0), a commercially available analysis software package, was used to create a three-dimensional model of the tower and calculate member stresses for various loading cases. Selected output from the analysis is included in Appendix A. When applicable, Crown Castle has calculated and provided the effective area for panel antennas using approved methods following the intent of the TIA-222 standard.

3.2) Assumptions

1) Tower and structures were maintained in accordance with the TIA-222 Standard.
2) The configuration of antennas, transmission cables, mounts and other appurtenances are as specified in Tables 1 and 2 and the referenced drawings.
3) Yield strengths of 50 ksi for the monopole shaft, 60 ksi for the base plate, and 50 ksi for the anchor bolts have been assumed based on experience with similar towers and are considered to be correct.
4) Necessary soil properties are not available in the geotechnical report. Presumptive soil parameters were taken from the Annex F of TIA-222-H, in combination with the referenced geotechnical report and is considered to be accurate.

This analysis may be affected if any assumptions are not valid or have been made in error. Morrison Hershfield should be notified to determine the effect on the structural integrity of the tower.

4) ANALYSIS RESULTS

Table 5 - Section Capacity (Summary)

Section No.	Elevation (ft)	Component Type	Size	Critical Element	P (K)	SF*P_allow (K)	% Capacity	Pass / Fail
L1	70 - 31.5	Pole	TP21.77x15.55x0.25	1	-5.54	802.19	25.9	Pass
L2	31.5 - 0	Pole	TP26.12x20.8403x0.25	2	-8.83	984.00	46.8	Pass
							Summary	
						Pole (L2)	46.8	Pass
						Rating =	46.8	Pass

Table 6 - Tower Component Stresses vs. Capacity – LC5

Notes	Component	Elevation (ft)	% Capacity	Pass / Fail
1	Anchor Rods	0	60.1	Pass
1	Base Plate		28.7	Pass
1	Base Foundation (Structure)	0	31.8	Pass
1	Base Foundation (Soil Interaction)		55.9	Pass

Structure Rating (max from all components) =	60.1%

Notes:
1) See additional documentation in "Appendix C – Additional Calculations" for calculations supporting the % capacity consumed.
2) *Rating per TIA-222-H, Section 15.5.

4.1) Recommendations

Once the equipment in Table 2 is removed, the tower and its foundation have sufficient capacity to carry the proposed load configuration. No modifications are required at this time.

APPENDIX A

TNXTOWER OUTPUT

Length (ft)	38.50	34.16
Number of Sides	12	12
Thickness (in)	0.2500	0.2500
Socket Length (ft)	2.66	
Top Dia (in)	15.5500	20.8403
Bot Dia (in)	21.7700	26.1200
Grade	A572-50	
Weight (K)	1.9	2.2

70.0 ft

31.5 ft

0.0 ft

4.1

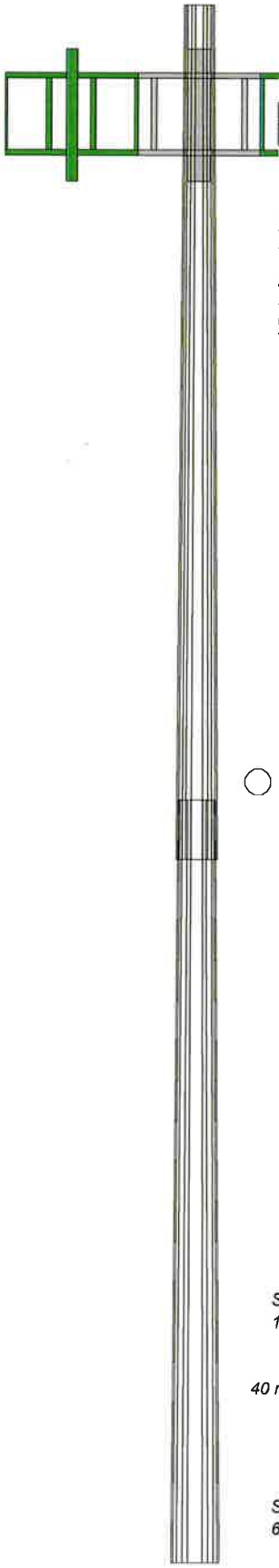

MATERIAL STRENGTH

GRADE	Fy	Fu	GRADE	Fy	Fu
A572-50	50 ksi	65 ksi			

TOWER DESIGN NOTES

1. Tower designed for Exposure C to the TIA-222-H Standard.
2. Tower designed for a 115 mph basic wind in accordance with the TIA-222-H Standard.
3. Tower is also designed for a 40 mph basic wind with 1.50 in ice. Ice is considered to increase in thickness with height.
4. Deflections are based upon a 60 mph wind.
5. Tower Risk Category II.
6. Topographic Category 1 with Crest Height of 0.00 ft
7. TOWER RATING: 46.8%

ALL REACTIONS ARE FACTORED

AXIAL 14 K

SHEAR 1 K

MOMENT 70 kip-ft

TORQUE 0 kip-ft
40 mph WIND - 1.5000 in ICE

AXIAL 9 K

SHEAR 6 K

MOMENT 289 kip-ft

TORQUE 0 kip-ft
REACTIONS - 115 mph WIND

Morrison Hershfield
1455 Lincoln Parkway, Suite 500
Atlanta, GA 30346
Phone: (770) 379-8500
FAX: (770) 379-8501
Consulting Engineers

Job: CN0-915R2 / 2101398			
Project: 817173 / LOMBARD			
Client: Crown Castle USA	Drawn by: MK	App'd:	
Code: TIA-222-H	Date: 08/19/21	Scale:	
Path:		Dwg No.	

5G: The next generation of wireless connectivity.

5G represents nothing short of a wireless revolution. It will usher in new technologies, new mobile experiences, and has the potential to fundamentally change the way we interact with each other—and the world. With the right infrastructure and technology in place, 5G will connect 100X more devices at up to 100X faster speeds[1]—opening new possibilities for wearables, machine-to-machine communications, and internet of things technologies.

5G will make our communities smarter, safer, and more efficient.

A safer, healthier community.

Faster, improved communications will bring new efficiencies to diagnosing and treating illnesses and will make responding to emergencies more effective.

More efficient, faster-moving cities.

5G will support smart city technologies that allow traffic to move smoothly and efficiently, while responding to changing conditions.

New opportunities in business and commerce.

Advanced augmented reality and virtual reality technologies will support new and existing industries while changing the way we interact with the world.

To learn more about what 5G will bring, visit CrownCastle.com/5G

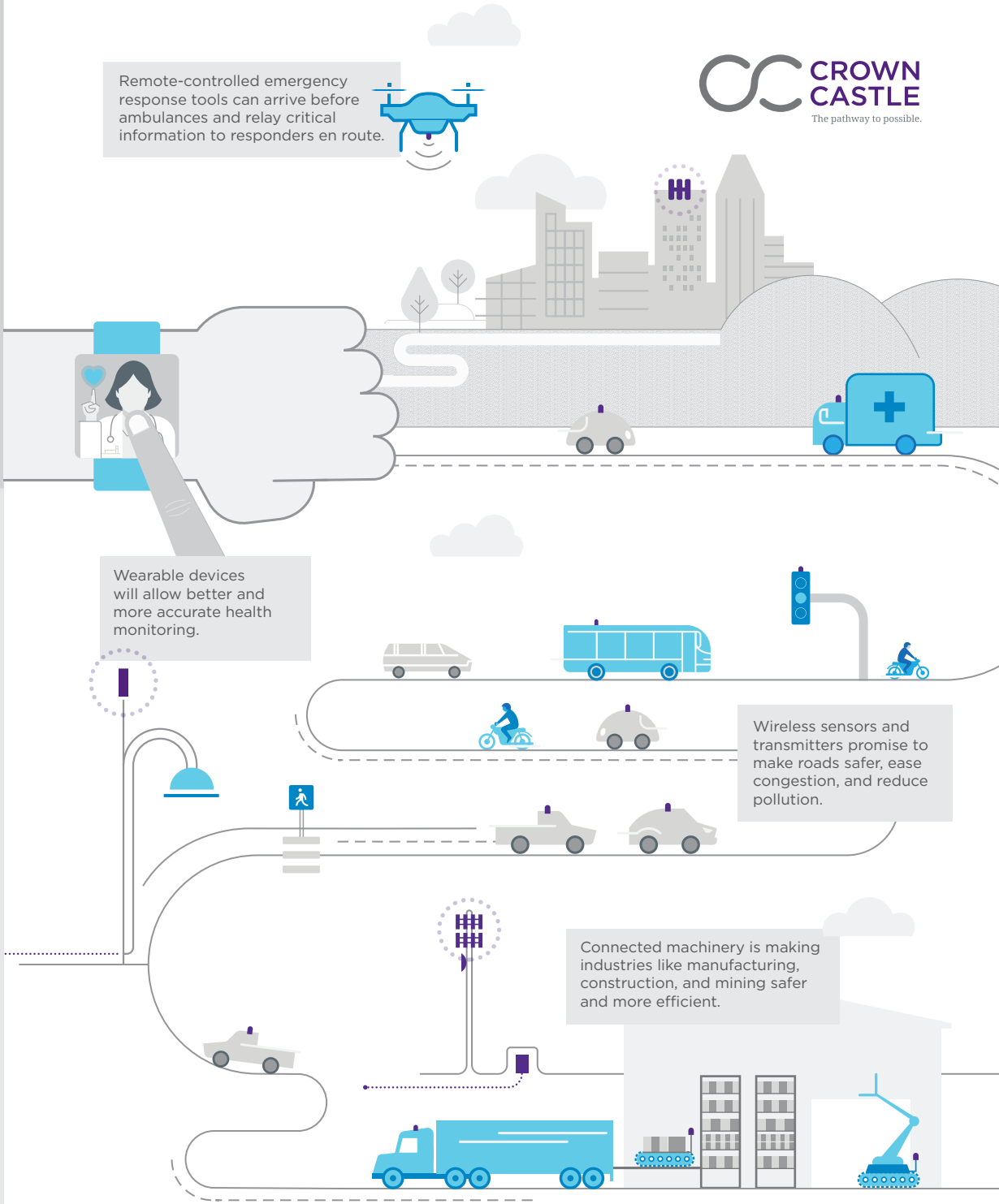

1. What is 5G: A Brief Explainer, *CTIA*, 2018.

©2020 Crown Castle

CC-IG-5G101-0320

Understanding the safety of 5G.

CROWN CASTLE
The pathway to possible.

You've probably heard a lot about new 5G networks, and it's only natural to wonder about their safety. Much like the signals for your TV, radio or wi-fi router, 5G travels to your device using electromagnetic energy—one of the most ubiquitous and well-studied phenomena in the universe.

Where 5G fits on the electromagnetic spectrum.

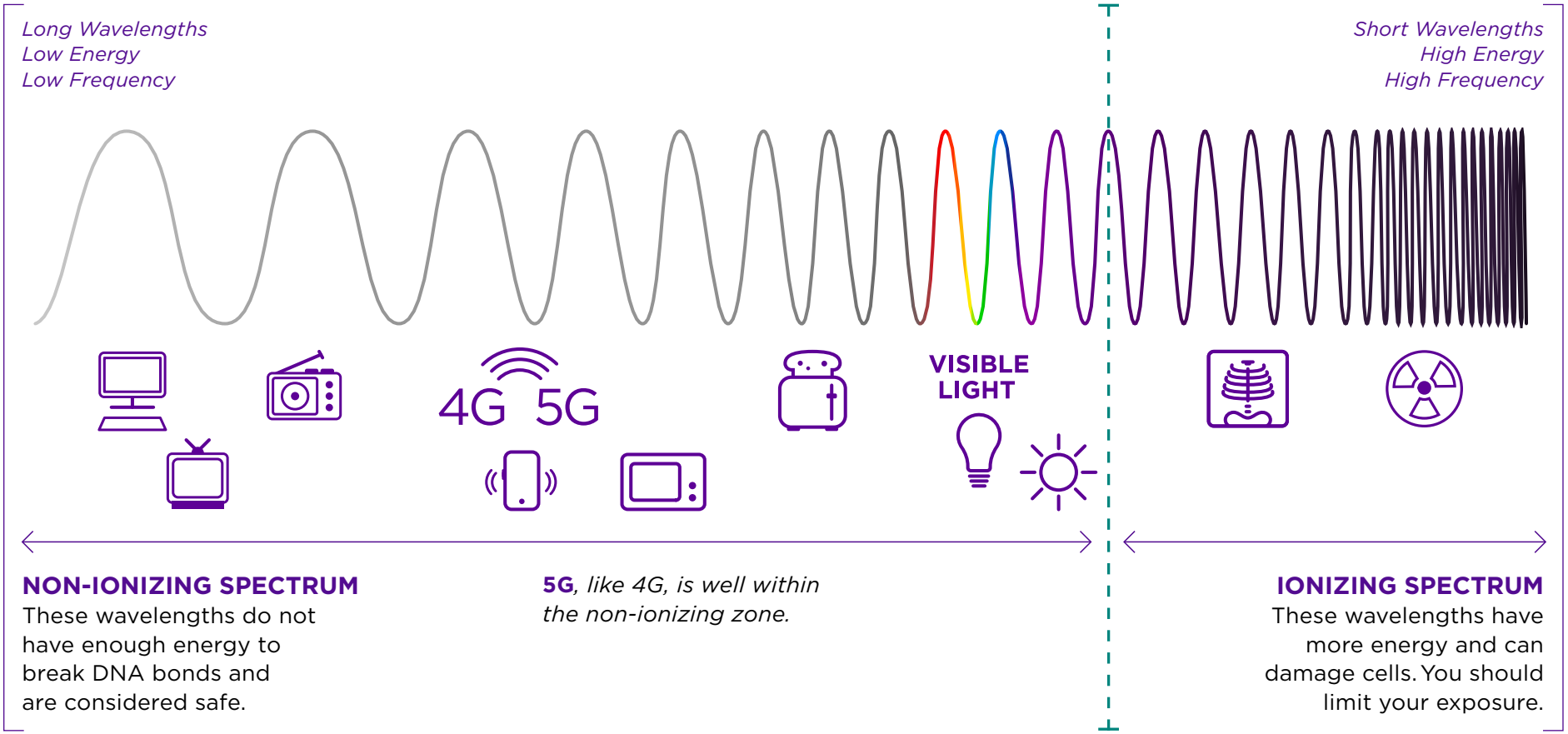

5G builds on 4G.

5G is the next generation of wireless technology, but it works pretty much the same as current 4G networks. To expand 5G throughout the country, carriers are working hard to expand small cells and fiber. The good news is that over **154,000 small cells are already deployed**[1] throughout the US—powering many of the 4G and LTE networks in use today.

Small cells are low-powered, fiber-connected nodes that are usually located on existing structures like streetlights and utility poles.
Read More →

Low power minimizes exposure.

We're constantly surrounded by electromagnetic energy. Whether you're talking about 5G, 4G or your Bluetooth headset, the physics are the same, and the body's response is essentially identical. You can see in this chart how emission levels from small cells compare to other common radio frequencies (RF)—all many times below what the FCC considers safe.

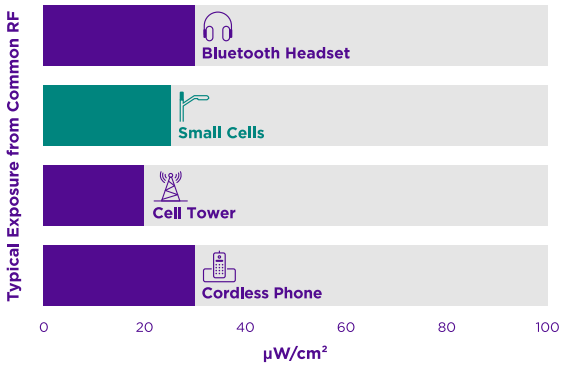

Source: © 2018 Andrew H. Thatcher, Board Certified Health Physicist.

The research is clear.

The consensus of nearly seven decades of research by many of the top scientific and health communities, including the FDA, is that electromagnetic emissions at the levels allowed by FCC regulations are safe.

We encourage you to take a deeper dive if you'd like to know more.

The 5G Health Hazard That Isn't.
The ***New York Times*** shows how misinformation about wireless technologies has spread. Read More →

5G and Your Health.
A scientist who sets global guidelines for 5G explains how we know it's safe. Read More →

Key takeaways.

1. Studies show that cellular signals—including 5G—are safe.
2. 5G is the next generation of cellular networks and builds on 4G.
3. 5G emissions are similar to those from everyday technologies like TV, radio, wi-fi—even your toaster.

"The light produced by a light bulb is a form of electromagnetic radiation with energy and frequency that is approximately 17,000 greater than that of the highest frequencies used by 5G."

Dr. Jerrold Bushberg,
Vice Chair of COMAR and Clinical Professor, Radiology & Radiation Oncology, University of California, Davis School of Medicine

[1] https://www.ctia.org/infrastructure-channel

© 2021 Crown Castle

Commercial Area Policies

The Community-Wide Plan designates five types of commercial and business areas: 1) Downtown, 2) service commercial, 3) office, and 4) neighborhood commercial, and 5) light industry.

Generalized recommendations for commercial and business areas are presented in Figure 5. More specific improvement and development recommendations for Downtown, Roosevelt Road and Five Corners are presented in Section 3 of this Plan report.

Improvement Guidelines:

Each of Glen Ellyn's existing commercial and business areas should be strengthened and upgraded. Viable existing stores and businesses should be improved and enhanced. New uses, particularly retail and convenience commercial uses that serve the needs of local residents, should be promoted.

New commercial, business and mixed-use development should be of a size and scale compatible with the established image and character of Glen Ellyn. Commercial and business development should be characterized by the highest possible standards of design and construction.

Since commercial and business areas are located along important traffic routes, access to individual properties should be carefully controlled to minimize conflicts with through traffic. The consolidation of access drives for adjacent properties should be encouraged.

Adequate off-street parking should be provided within all commercial and business areas. The consolidation of parking facilities for two or more businesses should be encouraged. Parking lots should be attractively landscaped, particularly along major streets.

The image and appearance of commercial and business areas should also be upgraded. Projects should be undertaken to improve the appearance of the public rights-of-way, including landscaping, lighting, signage, sidewalks, crosswalks and pedestrian amenities. Enhancements to private properties should include façade, parking lot and signage improvements.

Commercial and business areas should not adversely impact adjacent neighborhoods. Screening and buffering should be promoted between commercial and residential areas, including landscaping and attractive fencing. Commercial traffic and parking should not be allowed to "spill over" into the neighborhoods. Noise, safety and grounds maintenance should also be carefully monitored within commercial areas.

Downtown Glen Ellyn:

Glen Ellyn's Downtown is the traditional commercial and service focal point for the Village. It not only contains a range of retail, service, office and housing uses, but is also the site of several important public and institutional buildings.

The Plan strives to strengthen and enhance the historic character and traditional role of Downtown. It should be maintained as Glen Ellyn's multi-purpose commercial and service focal point. While other commercial and office areas will have important functional roles as well, Downtown should remain unique in terms of its pedestrian orientation and the range of businesses, services and other activities it offers to the community.

Compatible and high-quality new retail, service and mixed-use development and redevelopment should be promoted in selected locations within the Downtown, as described in Section 3.

Service Commercial Areas:

Service commercial areas, including Roosevelt Road and small clusters along Butterfield Road in unincorporated Glen Ellyn, should contain a range of retail, service, office and business activities that serve the community and surrounding region..

The Roosevelt Road corridor should continue to accommodate retail, convenience and auto-oriented commercial uses. The redevelopment and replacement of older, obsolete and marginal commercial properties should be promoted, as described in Section 3.

The clustering or grouping of commercial buildings within the same block should be promoted to allow for shared access drives, parking areas and pedestrian amenities.

Since the size of most lots along commercial corridors is limited, the consolidation of two or more smaller parcels should be encouraged to enable somewhat larger developments with improved access, parking, building placement, and overall design and appearance.

Glen Ellyn should explore the possibility and desirability of annexing the unincorporated commercial areas along Butterfield Road, Hill Avenue and North Avenue/Swift Road in order to supplement the local tax base and establish Village control over future development in these areas.

Office and Industrial Areas:

Office development has been increasing within Glen Ellyn in recent years. Most existing office development is located within or near the Downtown, along Roosevelt Road, and in smaller locations along Butterfield Road. Quality new office development should continue to be promoted.

The small cluster of industrial and business uses located along Hill Avenue just outside the Village is designated in the Plan as "light industrial." This area should be improved and upgraded as a limited and self-contained business area.

Compatible new light industrial and high-tech uses would also be appropriate within Glen Ellyn's office areas.

Neighborhood Commercial Area:

"Five Corners" should be revitalized as a neighborhood service area, a showcase for local history, and an attractive gateway to the Glen Ellyn community. The southwest quadrant of the intersection of Main Street and St. Charles Road should be promoted as a local Historical Center centered on Stacy's Tavern and other historic buildings. Traffic operational improvements should be undertaken, and the overall image and appearance of the area should also be enhanced. See Section 3 for more detailed recommendations.

Mixed Use

This category includes buildings with two or more distinct uses vertically stacked. Developments usually contain commercial on the ground floor and residential or office uses above. All mixed use developments are currently located within the Downtown. Higher-density mixed use development that complements the architecture of existing buildings should continue to be encouraged within Downtown to support street-level commercial activity while providing residential or office space above.

Office

This category consists of buildings dedicated to professional office spaces, including corporate headquarters, legal firms, and professional service providers. Medical establishments are also included in this land use category, including family physicians, eye care professionals, and medical campuses. Office uses should continue to be concentrated within Downtown and the Roosevelt Road Corridor, particularly along Taft Avenue, while encouraging the consolidation and comprehensive redevelopment of out-of-date office properties.

Public/Semi-Public

This category consists of institutions and community facilities that serve the residents of Glen Ellyn and contribute to quality of life and local culture. This includes the Village's highly-esteemed schools, Glen Ellyn Public Library, government buildings, police and fire facilities, historic centers, religious institutions, and non-profit organizations. Public/semi-public land use and policies are discussed in more detail in *Chapter 6: Community Facilities*.

Parks & Open Space

This category includes designated park spaces, nature reserves, golf courses, cemeteries, trails, playgrounds, and land used for sports recreation. The Village should continue to coordinate with local park districts and other partner organizations to preserve the community's large inventory of dedicated parks and open space and pursue opportunities to expand recreational amenities including trails and smaller neighborhood parks to ensure access for all residents. Components of the parks and open space category and relevant environmental features are discussed in *Chapter 7: Parks & Open Space*.

Light Industrial

This category includes light industrial businesses that have minimal impacts on adjacent uses. There are few light industrial uses in Glen Ellyn, the most prominent being Nicor Gas located off of Finley Road, and on Hill Avenue near Interstate 355. This category should continue to be maintained to support the Village's industrial base, while enhancing sites by providing proper screening from adjacent residential uses.

Utility & Transportation

This category focuses on land dedicated to transportation infrastructure or the production, storage, and maintenance of utilities, including the Union Pacific railroad right-of-way that passes through the center of Glen Ellyn. The Village should continue to ensure utility services meet the needs of the community. Unattractive facilities should be screened from neighboring uses to enhance the Village's appearance. Utilities and transportation are discussed in more detail in *Chapter 5: Transportation* and *Chapter 6: Community Facilities*.

Parking

This category includes land used for the parking of automobiles, including surface parking, parking structures, and garages. Properties identified within this category provide standalone parking and are not tied to a specific business or residence. Additional discussion of policies impacting parking areas, including areas of focus for the expansion of public parking and improvements to screening and landscaping, is located in *Chapter 4: Subarea Plans*.

DRAFT
FOR PUBLIC HEARING

Revised 6/29/92

ORDINANCE NO. 3565

AN ORDINANCE GRANTING A CONDITIONAL USE FOR AN 87 FOOT TALL MONOPOLE ANTENNA PURSUANT TO SUBSECTION F-2 (c) (2) IN SECTION 3 OF THE LOMBARD ZONING ORDINANCE, NO. 3274

(PC 92-14: 714 West Hill Avenue, Lombard, IL)

WHEREAS, the President and Board of Trustees of the Village of Lombard have heretofore adopted the Lombard Zoning Ordinance, otherwise known as Ordinance No. 3274; and,

WHEREAS, the subject property is zoned I Limited Industrial District; and,

WHEREAS, an application has been filed requesting approval of a Conditional Use to provide for the construction of an 87 foot tall monopole antenna on the property described in Section 2 below; and,

WHEREAS, a public hearing on such application has been conducted by the Village of Lombard Plan Commission on June 10, 1992 pursuant to appropriate and legal notice; and,

WHEREAS, THE President and Board of Trustees approve and adopt the findings and recommendations of the Plan Commission and incorporate such findings and recommendations herein by reference as if they were fully set forth herein;

NOW, THEREFORE, BE IT ORDAINED BY THE PRESIDENT AND BOARD OF TRUSTEES OF THE VILLAGE OF LOMBARD, DU PAGE COUNTY, ILLINOIS, as follows:

Section 1: That a Conditional Use is hereby granted for the property described in Section 2 below and pursuant to Subsection F-2 (c) (2) in Section 3 of the Village of Lombard Zoning Ordinance No. 3274 so as to allow said property to be used for the construction of an 87 foot tall monopole antenna within an I Limited Industrial District .

Section 2: That this ordinance is limited and restricted to the property generally located at 714 West Hill Avenue, Lombard, Illinois and legally described as follows:

Lot 1 in Hill Oak Subdivision of that part of Lot 12 lying northerly of the northerly line of Hill Avenue and southerly of the Chicago and Northwestern Railroad Right-of-way in Assessment Division of Section 12, Township 39 North, Range 10, East of the Third Principal Meridian, according to the plat of said Hill Oak Subdivision recorded May 11, 1970 as Document R70-14300 and Certificate of Correction recorded May 21, 1970 as Document R70-15844, in DuPage County, Illinois.

Parcel No. 05-12-207-033

Section 3: This ordinance shall be granted subject to compliance with the following conditions:

1. All site development shall generally comply with the site plan prepared by PAL Popowych Associates, LTD received by the Department of Community Development on May 7, 1992.

2. This conditional use shall be null and void unless a building permit is obtained within one year and a Certificate of Occupancy is obtained within 18 months of the approval of this ordinance.

3. Landscaping is subject to the approval of the Director of Community Development.

Section 4: This ordinance shall be in full force and effect from and after its passage, approval, and publication in pamphlet form as provided by law.

Passed on first reading this _____ day of _____, 1992.

First reading waived by action of the Board of Trustees this 25th day of June, 1992.

Passed on second reading this 25th day of June, 1992.

Ayes: TRUSTEES KRISCH, VAZQUEZ, BIRD, GATZ, MACKETT

Nayes: TRUSTEE TROSS

Absent: NONE

Approved this 25th, day of June, 1992.

Richard C. Arnold
Village President

ATTEST:

Lorraine G. Gerhardt
Lorraine G. Gerhardt
Village Clerk

APPROVAL AS TO FORM:

_____
Thomas P. Bayer
Village Attorney

Published by me in pamphlet form this 1st day of July, 1991.

Lorraine G. Gerhardt
Lorraine G. Gerhardt
Village Clerk

LOCATION MAP

N

Lombard Zoning Map
Scale 1" = 1000'

PC 92-14

220 West Hill Avenue: Requests a conditional use to provide for an 87 foot tall monopole antenna tower.

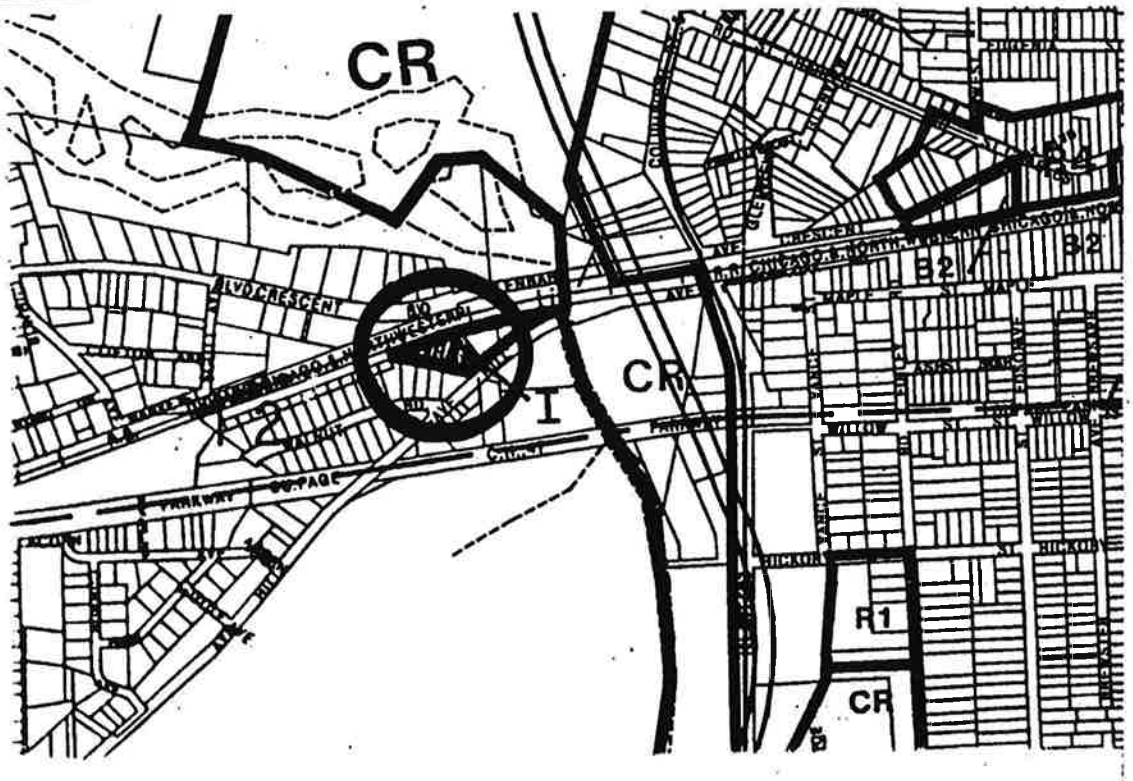

FRED BUCHOLZ
DUPAGE COUNTY RECORDER
OCT.30,2013 10:56 AM
OTHER 05-12-207-032
035 PAGES R2013-149932

Village of Glen Ellyn

Ordinance No. 6164

An Ordinance Approving Annexation Agreements for Properties Located at 21W180 Hill Avenue and 21W200 Hill Avenue Glen Ellyn, IL 60137

Adopted by the
President and Board of Trustees of the
Village of Glen Ellyn,
DuPage County, Illinois
This 9th Day of September, 2013

Published in pamphlet form by the authority of the President and Board of Trustees of the Village of Glen Ellyn, DuPage County, Illinois, this 10th day of September, 2013

PREPARED BY AND MAIL TO:
VILLAGE OF GLEN ELLYN
ATTN: VILLAGE CLERK
535 Duane Street
Glen Ellyn, IL 60137

Ordinance No. 6164

An Ordinance Approving Annexation Agreements for Properties Located at 21W180 Hill Avenue and 21W200 Hill Avenue Glen Ellyn, IL 60137

Whereas, Vincent Cuyler, owner of property located at 21W200 Hill Avenue and Lynnea Herlien, daughter of Jean Noorlag owner of 21W180 Hill Avenue, and acting under the authority granted to her by power of attorney, have agreed to enter into annexation agreements with the Village of Glen Ellyn for the aforementioned properties located on the north side of Hill Avenue between Route 53 and Walnut Road; and

Whereas, the subject properties are not located within the corporate limits of any municipality, are contiguous to the corporate limits of the Village of Glen Ellyn and are legally described as follows:

21W180 Hill Avenue
LOTS 1 AND 2 IN HILL OAK SUBDIVISION, BEING PART OF THE NORTHEAST QUARTER OF SECTION 12, TOWNSHIP 39 NORTH, RANGE 10 EAST OF THE THIRD PRINCIPAL MERIDIAN, ACCORDING TO THE PLAT THEREOF RECORDED MAY 11, 1970 AS DOCUMENT NUMBER R70-14300 AND CERTIFICATE OF CORRECTION RECORDED MAY 21, 1970 AS DOCUMENT NUMBER R70-15844 IN DUPAGE COUNTY, ILLINOIS.

P.I.N.s: 05-12-207-032 and 05-12-207-033; and

21W200 HILL AVENUE
PARCEL 1: LOT 1 IN VILLA PARK KITCHENS RESUBDIVISION BEING PART OF THE NORTHEAST QUARTER OF SECTION 12, TOWNSHIP 39 NORTH, RANGE 10 EAST OF THE THIRD PRINCIPAL MERIDIAN, ACCORDING TO THE PLAT THEREOF RECORDED AUGUST 11, 1972 AS DOCUMENT NUMBER R72-47323, ALL IN DUPAGE COUNTY, ILLINOIS,

AND ALSO:

THAT PART OF THE UNION PACIFIC RAILROAD RIGHT-OF-WAY (FORMERLY THE CHICAGO AND NORTHWESTERN RAILROAD RIGHT OF WAY) LYING NORTH OF AND ABUTTING LOT 1 IN VILLAGE PARK KITCHENS RESUBDIVISION AFORESAID, MORE PARTICULARLY DESCRIBED AS FOLLOWS:

COMMENCING AT THE NORTHEAST CORNER OF SAID LOT 2 OF SAID VILLAGE PARK KITCHENS RESUBDIVISION AND RUNNING THENCE WESTERLY ALONG THE NORTH LINE THEREOF, A DISTANCE OF 176.18 FEET TO A POINT OF CURVE IN SAID NORTH LINE; THENCE CONTINUING WESTERLY ALONG THE NORTH LINE OF SAID LOT 2, BEING THE ARC OF A CURVE CONCAVE TO THE SOUTHEAST HAVING A RADIUS OF 3321.38 FEET, WHOSE CENTRAL ANGLE IS 01 DEGREES 16 MINUTES 48 SECONDS, A DISTANCE OF 74.20 FEET (REC. & MEAS.) TO THE NORTHEAST CORNER OF SAID LOT 1 FOR THE POINT OF BEGINNING; RUNNING THENCE WESTERLY ALONG THE NORTH LINE OF SAID LOT , BEING THE ARC OF A CURVE CONCAVE TO THE SOUTHEAST, HAVING A RADIUS OF 3321.38 FEET AND A CENTRAL ANGLE OF 02 DEGREES 04 MINUTES 19 SECONDS, AN ARC DISTANCE OF 120.10 FEET (MEAS., REC.=120.12') THENCE NORTHERLY RADIAL TO THE LAST DESCRIBED CURVE, A DISTANCE OF 12.79 FEET; THENCE EASTERLY A DISTANCE OF 69.97 FEET TO A POINT THAT IS 16.00 FEET NORTHERLY OF (MEASURED RADIALLY THERETO) THE NORTH LINE OF VILLA PARK KITCHENS RESUBDIVISION AS AFORESAID; THENCE CONTINUING EASTERLY ALONG A CURVE CONCAVE TO THE SOUTHEAST, HAVING A RADIUS OF 3,337.21 FEET (DEED, 3,337.38'=CALC.), A CENTRAL ANGLE OF 00 DEGREES 52 MINUTES 17 SECONDS, AND BEING NORMALLY PARALLEL WITH SAID NORTH LINE, AN ARC DISTANCE OF 50.75 FEET; THENCE SOUTHEASTERLY 16.00 FEET TO THE POINT OF BEGINNING, ACCORDING TO DOCUMENT RECORDED MARCH 24, 1995, AS NUMBER R95-034450, ALL IN DUPAGE COUNTY, ILLINOIS.

P.I.N. 05-12-207-037

PARCEL 2:

LOT 2 IN VILLA PARK KITCHENS RESUBDIVISION, BEING A PART OF THE NORTHEAST QUARTER OF SECTION 12, TOWNSHIP 39 NORTH, RANGE 10 EAST OF THE THIRD PRINCIPAL MERIDIAN, ACCORDING TO THE PLAT THEREOF RECORDED AUGUST 11, 1972 AS DOCUMENT NUMBER R72-47323 IN DUPAGE COUNTY, ILLINOIS,

AND, ALSO:

THAT PART OF THE UNION PACIFIC RAILROAD RIGHT OF WAY (FORMERLY THE CHICAGO AND NORTHWESTERN RAILROAD RIGHT OF WAY) LAYING NORTH OF AND ABUTTING LOT 2 IN VILLA PARK KITCHENS RESUBDIVISION AFORESAID, MORE PARTICULARLY DESCRIBED AS FOLLOWS:

BEGINNING AT THE NORTHEAST CORNER OF SAID LOT 2 AND RUNNING THENCE WESTERLY ALONG THE NORTH LINE THEREOF, A DISTANCE OF 176.18 FEET TO A POINT OF CURVE IN SAID NORTH LINE; THENCE CONTINUING WESTERLY ALONG THE NORTH LINE OF SAID LOT 2, BEING THE ARC OF A CURVE CONCAVE TO THE SOUTHEAST HAVING A RADIUS OF 3321.38 FEET, WHOSE CENTRAL ANGLE IS 01 DEGREE 16 MINUTES 48 SECONDS, A DISTANCE OF 74.20 FEET (REC. & MEAS.) TO THE NORTHWEST CORNER OF SAID LOT 2; THENCE NORTHERLY RADIAL TO THE LAST

DESCRIBED CURVE A DISTANCE OF 16.00 FEET; THENCE EASTERLY ALONG A CURVE CONCAVE TO THE SOUTHEAST, HAVING A RADIUS OF 3,337.21 FEET (DEED,3,337.38=CALC.), A CETNRAL ANGLE OF 01 DEGREE 16 MINUTES 50 SECONDS, AND BEING NORMALLY PARALLEL WITH SAID NORTH LINE, A DISTANCE OF 74.60 FEET; THENCE EASTERLY ALONG A LINE THAT IS 16.00 FEET NORTH OF AND PARALLEL WITH SAID NORTH LINE, A DISTANCE OF 176.18 FEET (DEED, 176.22'=MEAS.) TO A POINT THAT IS 16.00 FEET NORTHERLY OF, AS MEASURED AT RIGHT ANGLES TO SAID NORTH LINE, THE NORTHEAST CORNER OF LOT 2, AFORESAID; THENCE SOUTHERLY 16.00 FEET TO THE POINT OF BEGINNING, ACCORDING TO DOCUMENT RECORDED MARCH 24, 1995, AS NUMBER R95-034450, ALL IN DUPAGE COUNTY, ILLINOIS.

P.I.N: 05-12-207-038; and

Whereas, the Village has issued, delivered and published all statutorily required notices regarding the consideration of the proposed annexation agreements; and

Whereas, in accordance with all statutorily required notices, on September 9, 2013, the Village Board conducted a public hearing on the proposed annexation agreements; and

Whereas, after due investigation and consideration and pursuant to the aforesaid public hearing, the President and Board of Trustees deem it in the best interest of the Village of Glen Ellyn to enter into the annexation agreements, attached hereto as ***Exhibits "A "*** and ***"B"***.

Now, Therefore, be it Ordained by the President and Board of Trustees of the Village of Glen Ellyn, DuPage County, Illinois, in the exercise of its home rule powers, as follows:

Section One: The foregoing recitals and the preambles in the annexation agreements attached hereto as ***Exhibits "A"*** and ***"B"*** shall be, and are hereby, incorporated into and made a part of this Ordinance as if fully set forth in this Section One.

Section Two: The Village President and Village Clerk are hereby authorized and directed to execute and attest the annexation agreements for 21W180 Hill Avenue and 21W200 Hill Avenue, attached hereto as ***Exhibits "A"*** and ***"B"*** on behalf of the Village of Glen Ellyn.

Section Three: The Village Clerk is hereby authorized and directed to cause said annexation

agreements to be recorded with the Recorder of Deeds of DuPage County, upon the proper execution of the same on behalf of all of the parties, together with a certified copy of this Ordinance approving the execution of the annexation agreements on behalf of the Village of Glen Ellyn.

Section Four: This Ordinance shall be in full force and effect from and after its passage, approval, and publication in pamphlet form.

Passed by the President and Board of Trustees of the Village of Glen Ellyn, Illinois, this 9th day of September, 2013.

Ayes: Trustees Clark, Elliott, Friedberg, Sadecki and McGinley

Nays: 0

Absent: Trustee O'Shea

Approved by the Village President of the Village of Glen Ellyn, Illinois, this 9th day of September, 2013.

Village President of the
Village of Glen Ellyn, Illinois

Attest:

Village Clerk of the
Village of Glen Ellyn, Illinois

(Published in pamphlet form and posted on the 10th day of September 2013)

X:\Plandev\PLANNING\ANNEXATIONS\Hill Avenue\Ordinance Approving AA.doc

CERTIFICATION

I, Catherine Galvin, duly elected Village Clerk of the Village of Glen Ellyn, Illinois, do hereby certify that the attached is a true and correct copy of Ordinance No. 6164, passed by the Board of Trustees of the Village of Glen Ellyn, Illinois, at the Regular Board Meeting of said Board held on the 9th day of September 2013, and that the same was signed and approved by the President of said Village on the 9th day of September 2013.

I do further certify that the original, of which the attached is a true and correct copy, is entrusted to me as Village Clerk of said Village for safekeeping and that I am the lawful custodian and keeper of the same.

IN WITNESS WHEREOF, I have hereunto set my hand and affixed the corporate seal of the Village of Glen Ellyn, Illinois, this 9th day of September, 2013.

Catherine Galvin

Village Clerk

CORPORATE SEAL

ANNEXATION AGREEMENT

This Annexation Agreement ("Agreement") is made and entered into this 9th day of SEPTEMBER, 2013, by and between the VILLAGE OF GLEN ELLYN, an Illinois municipal corporation having its principal office in DuPage County, Illinois ("Village"), and WEST SUBURBAN BANK LAND TRUST NO. 3344 BY NOORLAG REAL ESTATE GROUP, LLC BY LYNEA R. HERLIEN, MANAGER ("Owner"). The Village and Owner are collectively referred to as ("Parties").

RECITALS

A. The Owner is the Owner of record of two adjacent parcels of land totaling 2.82 acres commonly known as 21W180 Hill Avenue. The Property is located on the north side of Hill Avenue between Illinois Route 53 and Walnut Road and is not currently contiguous to the Village of Glen Ellyn. The subject Property is legally described on ***Exhibit "A"*** attached hereto and is identified for real estate purposes with P.I.N.s of 05-12-207-032 and 05-12-207-033 ("Property"). The Property is currently improved.

B. The Village is an Illinois home rule municipal corporation, having its principal office at 535 Duane Street, Glen Ellyn, Illinois.

C. The Owner desires to annex the Property to the Village, as soon as reasonably practicable following the establishment of contiguity between the corporate boundaries of the Village and the Property, pursuant to and in accordance with Section 7-1-8 of the Illinois Municipal Code, 65 ILCS 5/7-1-8, and agrees to do all things necessary to assist in that process when the Village so requests, including the execution and delivery to the Village Clerk of a notarized annexation petition, which petition shall strictly conform to ***Exhibit "B"*** to this Agreement ***("Annexation Petition").***

D. Each parcel of the Property is currently being served by water from the Village of Lombard.

E. The Owner desires to disconnect the Property from the Lombard water system and connect the Property to the Village of Glen Ellyn water system upon Glen Ellyn water becoming available to the Property.

F. Each parcel of the Property is currently served by Village of Lombard sanitary sewer.

G. The Owner desires to disconnect the Property from the Lombard sanitary sewer system and connect the Property to the Village of Glen Ellyn sanitary sewer system upon Glen Ellyn sanitary sewer becoming available to the Property.

H. A public hearing to consider this Agreement was noticed in the Daily Herald on AUGUST 22, 2013 and was held by the Village President and Board of Trustees on SEPTEMBER 9, 2013.

I. The Village has published all notices as required by the Illinois Municipal Code 65 ILCS 5/11-15.1-3 *et seq.*

I. The annexation of the Property shall extend the corporate limits of the Village to the far side of any adjacent highway not heretofore annexed to any other municipality.

K. All other matters, in addition to those specifically referred to above, which are included in this Agreement, have been considered by the Parties, and the annexation of the Property will inure to the benefit and improvement of the Village by increasing the taxable value of the real property within the Village's corporate limits, extending the corporate limits and jurisdiction of the Village to the limits of the Property, promoting the sound planning and development of the Village, and otherwise enhancing and promoting the general welfare of the Village residents and taxpayers.

NOW, THEREFORE, the Owner and Village, in consideration of the mutual covenants herein contained, agree as follows:

1. Incorporation of Recitals. The recitals above are hereby incorporated by reference into this Agreement.

2. Legal Conformance with Law. This Agreement is made pursuant to and in accordance with the provisions of the Village of Glen Ellyn Village Code, and its home rule powers, as established in the Illinois Revised Statutes and the Illinois Constitution.

3. Annexation. Upon notification by the Village that the Property has become, in the opinion of the Village, adjacent and contiguous to the Village, the Owner (if still holding title to any portion of the Property) and each grantee(s) shall within 30 days (a) file a fully executed Annexation Petition in a form approved by the Village Attorney and substantially in accordance with the form of ***Exhibit "B"*** attached to this agreement and (b) provide Owner's proof of Ownership of the Property. A Plat of Annexation for the Property shall also be prepared by the Village. Upon, but not before the Village's receipt of the Annexation Petition, the Owner's proof of Ownership, and preparation of a Plat of Annexation, the Village's Corporate Authorities may adopt a valid and binding Annexation Ordinance providing for the annexation of the Property and any adjacent rights-of-way to the Village pursuant to Section 7-1-8 of the Illinois Municipal Code, 65 ILCS 5/7-1-8. The Village Clerk shall then promptly cause the Annexation Ordinance, Plat of Annexation, and related documents, to be recorded in the Office of the DuPage County Recorder.

Alternatively, at the option of the Village, within 30 days after notice from the Village to do so, and subject to the provisions of 65 ILCS 5/7-1-2 et. seq., or 65 ILCS 5/7-1-11, as amended, the Owner and/or her successors and assigns shall join in, and properly execute, An Annexation Petition to be filed with the Circuit Court of the Eighteenth Judicial Circuit, DuPage County, Illinois, and shall cooperate with the prosecution of the Petition before said court, provided, however, that the costs of any such litigation shall not be the responsibility of the Owner.

If all or a portion of the Property is conveyed prior to the annexation of the Property to the Village, whether by the Owner or other subsequent grantor, any contract for sale or other agreement relating to each and every such conveyance shall contain an acknowledgement by the grantee of the existence of this Agreement and the requirement that upon the Property becoming, in the opinion of the Village, adjacent and contiguous to the Village, the Property will be annexed to the Village. In addition, each such contract or other agreement shall contain an agreement by the grantee(s) to do all things necessary or appropriate to cause the Property to be duly and validly annexed to the Village, including, but not limited to, execution of an Annexation Petition.

Should a court of competent jurisdiction determine that annexation of the Property was defective because of the failure of the Parties to follow a procedural requirement constituting a valid precondition to proper annexation of the Property, the Parties, including the successors and assigns of the Owner, agree to promptly cause the Property to be reannexed to the Village in a manner that satisfies all procedural requirements.

Should a court of competent jurisdiction determine that annexation of the Property by the Village was without lawful authority (i.e., lack of contiguity), the Parties agree that this Agreement shall be deemed a Pre-Annexation Agreement authorized pursuant to 65 ILCS 5/11-15.1-1, as amended, and shall remain in full force and effect to the extent permitted by law. Thereafter, should the Property become contiguous to the Village, the Parties, including the successors and assigns of the Owner, agree to promptly take all necessary steps as may then be provided by law to perfect the annexation of the Property to the Village.

4. Zoning. Within six (6) months of the approval of this Agreement, the Village will hold a public hearing and create a new light industrial zoning district. The Owner will receive advance notice of all public meetings and hearings of the Glen Ellyn Plan Commission at which the new light industrial zoning district is discussed. Because the parties to this Agreement desire to move quickly to cause the execution of this Annexation Agreement, the public hearing, before the Plan Commission required by law to take place before the Village Board can definitely act upon the light industrial zoning district, will not have yet taken place prior to the adoption of this Agreement. For this reason, in the event that the Village does not within six (6) months of the date of the execution of this Agreement, approve a new light industrial zoning district, the Agreement shall be void and all the promises and obligations of the Owner shall be terminated. If, however, as is anticipated, the Village does adopt the aforementioned light industrial zoning district, it shall, upon the annexation of the subject Property, grant the light industrial zoning district to the subject Property.

Any existing use or condition of the Property, upon annexation, that does not comply with the requirements of Glen Ellyn's Zoning Code may continue and will be considered a permitted nonconforming use. The Owner's most current plat of survey documenting the existing conditions of the Property shall be submitted to the Village within thirty (30) days of approval of this Agreement and used in conjunction with aerial photographs and other plans, plats and similar documents to evidence the current uses and conditions of the site. Notwithstanding anything herein to the contrary, following annexation, any new tenants occupying the building shall conform to the use regulations of the applicable Village zoning district.

5. Water Service. Each parcel of the Property is currently served by water from the Village of Lombard and the Owner desires to connect to the Glen Ellyn water system upon it becoming available to the Property. The Owner agrees to allow the Village to disconnect the Property from the Lombard water system and connect the Property to the Glen Ellyn water system upon Glen Ellyn water becoming available to the Property. The Owner shall meet all applicable ordinance requirements pertaining to such connections, including upgrades and other necessities. The Owner shall not be required to pay their proportionate share of any water main extension by the Village. The Village further agrees to waive all permit fees, connection fees and building permit deposits related to connecting the Owner's private service line to the Village's water main.

At the time that the Glen Ellyn water system is available to the Property, the Village of Glen Ellyn shall make a good faith effort to connect the Property as part of the water main extension project. If improvements are needed to correct deficiencies or Owner responsible upgrades are required to make a connection, the Owner agrees to hire a contractor and to pay up to $5000 of the private costs and charges associated with the connection of a private water service line to the Village of Glen Ellyn's water main with the Village paying any amount over $5000. Any water service connections shall be inspected by Village staff to ensure that they are constructed in accordance with Village standards.

In the event that the Owner fails to petition Glen Ellyn for annexation in accordance with Section 3 above or fails to comply with any other provision of this Annexation Agreement, Glen Ellyn may, at its sole option, discontinue water service to the property and enforce this Agreement in a court of appropriate jurisdiction by specific performance.

6. Sanitary Sewer Service. Each parcel of the Property is currently receiving sanitary sewer service from the Village of Lombard and the Owner desires to connect to the Glen Ellyn sanitary sewer system upon it becoming available to the Property. The Owner agrees to allow the Village to disconnect the Property from the Lombard sanitary sewer system and connect the Property to the Glen Ellyn sanitary sewer system upon Glen Ellyn sanitary sewer becoming available to the Property. The Owner shall meet all applicable ordinance requirements pertaining to such connections, including upgrades and other necessities. The Owner shall not be required to pay their proportionate share of any sanitary sewer main extension by the Village. The Village further agrees to waive all permit fees, connection fees and building permit deposits related to connecting the Owner's private service line to the Village's sanitary sewer main.

At the time that the Glen Ellyn sanitary sewer system is available to the Property, the Village of Glen Ellyn shall make a good faith effort to connect the Property as part of the sanitary sewer extension project. If improvements are needed to correct deficiencies or Owner responsible upgrades are required to make a connection, the Owner agrees to hire a contractor and to pay up to $5000 of the private costs and charges associated with the connection of a private sanitary sewer service line to the Village of Glen Ellyn sanitary sewer main with the Village paying any amount over $5000. Any sanitary sewer connections shall be inspected by Village staff to ensure that they are constructed in accordance with Village standards.

In the event that the Owner fails to petition Glen Ellyn for annexation in accordance with Section 3 above or fails to comply with any other provision of this Annexation Agreement, Glen Ellyn may, at its sole option, discontinue sanitary sewer services to the Property and enforce this Agreement in a court of appropriate jurisdiction by specific performance.

7. Rates for Water and Sanitary Sewer Service. Until such time as the Property is annexed to Glen Ellyn, the Owner agrees to pay the usual and customary charges for water and sanitary sewer service for customers outside of Glen Ellyn's corporate limits, as may be established from time-to-time by the corporate authorities of Glen Ellyn. Upon annexation, the Owner shall pay the same rates for water and sanitary sewer services charged to customers inside the Village limits.

8. Fire Protection. The Property is currently served by the Village of Lombard Fire Department. Upon approval of this annexation agreement, the property will be disconnected from the Lombard Fire District and fire service will be provided by the Glen Ellyn Volunteer Fire Company. The Owners agree to pay their proportionate share of the cost of fire service by either becoming part of a Special Service Area approved by the Village on November 23, 2009 by the adoption of Ordinance 5822 and recorded with the DuPage County Recorder of Deeds as document number R2009-191157 which imposes a special tax on unincorporated properties for fire protection services provided by the Glen Ellyn Volunteer Fire Company (hereinafter "Fire SSA") or upon receiving an invoice, pay an annual amount equal to what would be charged against the Property, if the Property were included in the Fire SSA. Payments to support the Glen Ellyn Voluntary Fire Company will continue to be collected annually until such time as the Property is annexed to Glen Ellyn. Following annexation, the Village shall reimburse the Owners the proportional amount for any payments for fire service following the date of annexation and remove the Property from the Fire SSA, if appropriate.

In accordance with existing state law, the Lombard Fire District may require the Village to pay it an amount of money which, over a period of years, equals three (3) years of lost Fire Protection District taxes. If the Village is requested and obligated by law to pay lost real estate tax revenue to the Lombard Fire District, the Owner shall reimburse the Village for the actual amounts which the Village is required to pay.

9. Utility Easements. The Owner agrees to grant the Village at no cost utility easements to allow the Village to extend water and sanitary sewer mains across the Property which will allow the Village to connect the water and sanitary sewer systems in the area from Crescent Boulevard to Hill Avenue. The areas of the easements to be established are identified on ***Exhibits "C1" and "C2"*** attached hereto. The Village will at its own cost, prepare all plats, agreements and other easement documentation related to the easement for execution by the Owner. The easement documentation will state, among other matters that any construction will be performed with minimal disruption to the Owner and any tenants on the Property, that the easement parcel will not materially conflict with any existing easements, and that the Property will be placed in at least as good a condition as existing prior to construction. The Owner shall not delay execution of these documents and shall sign them within 30 days of approval of the documents.

10. Village Codes. While the Property remains in unincorporated DuPage County, it shall be developed pursuant to the building and zoning regulations of DuPage County, except as otherwise provided herein. From and after the date of annexation of the Property to the Village, the property shall be maintained in accordance with and pursuant to the Village Code of Glen Ellyn, including the building, subdivision, and zoning regulations contained therein, except as otherwise noted in Section 4 of this Agreement. Notwithstanding anything above to contrary, the Owner shall abide, prior to annexation, with all ordinances and regulations of the Village that relate to water and sanitary sewer service. In addition, the Owner shall with regard to new construction, renovation or expansion, be required to follow the Village Ordinances regarding sprinkler systems prior to and after annexation.

11. Hill Avenue. Hill Avenue shall be maintained by the Village of Lombard until such time as the Property is annexed to Glen Ellyn or Hill Avenue is otherwise incorporated into Glen Ellyn as part of any agreement between Glen Ellyn and Lombard or the property on the south side of Hill Avenue is annexed to Glen Ellyn.

12. Village Address. Upon annexation to the Village, the Village will assign the appropriate Village addresses to the Property.

13. Waiver of Annexation Fee. The Village agrees to waive its usual and customary annexation fee for the Property upon annexation to the Village.

14. Term. The term of this Agreement will be 20 years from the date of execution hereof, which will be deemed to become effective on the date hereof.

15. Annexation Agreement Extension. At the option of the Village, the Village may extend this Annexation Agreement, at its conclusion, for an additional period of up to 20 years for a portion or all of the Property. If the Village wishes to exercise this option, it shall do so in writing not earlier than two years before the expiration of the Annexation Agreement, nor later than three months prior to this Agreement's initial termination date. Notice shall be sent in writing to (i) that entity that has paid the real estate property taxes during one of the last two years for the Property or that portion of the Property for which the Village wishes to extend this Agreement or (ii) to the record title holder of the Property or that portion of the Property for which the Village wishes to extend this Agreement. If the Village decides in its sole and absolute opinion to extend the term of this Agreement, the Village may do so whether or not the Property, or any portion of the Property, has been annexed to the Village. The Village may only extend the term of this Agreement once. In the event that the Village has not exercised the option to extend the term of this Agreement pursuant to this Section, and if the Property has not been annexed to the Village at this Agreement's initial termination date, the Village and the Owner may enter into a new Annexation Agreement in the manner provided by law. If the Village has been providing utility services to the non-annexed Property or any non-annexed portions of the Property pursuant to this Agreement, it may terminate such utility service at the conclusion of this Agreement; provided, however, that the Village provide not less than one year prior written notice of such termination to (i) that entity that has paid the real estate property taxes during one of the last two years for the Property or that portion of the Property for which the Village desires to terminate any such utility service or (ii) to the record title holder of the

Property or any portion of the Property for which the Village desires to terminate any such utility service.

16. General Provisions.

A. Severability. In the event that any portion of this Annexation Agreement will be found to be invalid by any court of competent jurisdiction, such finding of invalidity as to that portion will not affect the validity or enforceability of the balance of this Agreement.

B. Remedies. In addition to all rights and remedies specified in this Agreement, the Village will have the authority to pursue any and all rights and remedies, at law or in equity, to which it is entitled in order to enforce the terms of this Agreement. In the event that the Owner fails to comply, the Village may institute an action for specific performance along with other civil and quasi-criminal actions as permitted by law, and the Village may disconnect the water and sanitary sewer services. The Owner will be further liable for any attorney fees, court costs and other costs incurred by the Village as a consequence of the Village's enforcement of this provision.

C. Amendment. This Agreement may be amended from time to time with the consent of the parties, pursuant to Statute.

D. Conflict Regulations. The provisions of this Agreement shall supersede the provision of any Village Codes and Ordinances that may be in conflict with the provisions of this Agreement.

E. Enforcement. This Agreement shall be enforceable in any court of competent jurisdiction by either the Owner or the Village, and their respective successors and assigns, by an appropriate action at law or in equity, to secure the performance of the promises, obligations, and covenants in this Agreement, including the specific performance of this Agreement. The laws of the State of Illinois shall govern this Agreement. Any lawsuit enforcement filed against the Village of Glen Ellyn, or its officers, employees or independent contractors may only seek injunction, mandamus or specific performance for the enforcement of the agreement and may not seek damages.

F. Successors and Assigns and Ownership. This Agreement shall inure to the benefit of and be binding upon the Owner and Village and their respective successors and assigns. No conveyance, transfer or assignment of fee title in the Property or of this Agreement shall serve to release the Owner of her duties and obligations already undertaken under this Agreement. Both parties acknowledge by their signature to this Agreement that the statements made in this Annexation Agreement are true and that they have the authority to execute the Agreement and to bind the Village or the Owner.

G. Application of Ordinances. Upon annexation, the Property and its use will be subject to all Village ordinances generally applicable throughout the Village except as herein set forth.

H. Recording. The Village Clerk is hereby directed to cause this Agreement to be recorded with the Recorder of Deeds of DuPage County, following its execution and approval by the Village Board.

I. No Disconnection. Once the Property subject to this Annexation Agreement has been annexed to the Village, the Owner shall not petition the Circuit court to take any other action to cause the Property to be disconnected from the Village during the term of this Annexation Agreement or any extension to that term. In addition, the Owner may not during the term of this Annexation Agreement petition any other municipality or a court to permit annexation to another municipality.

J. Recitals and Exhibits. The recitals set forth in the beginning of this Agreement, and the exhibits attached hereto, are incorporated herein by this reference and shall constitute substantive provisions to this Agreement.

K. Captions and Paragraph Headings. The captions and paragraph headings used herein are for convenience only and shall not be used in construing any term or provision of this Agreement.

17. Notice. Any notice or communication required or permitted to be given under this Agreement shall be in writing and shall be delivered (i) personally, (ii) by a reputable overnight courier, (iii) by certified mail, return receipt requested, and deposited in the U.S. Mail, postage prepaid, (iv) by facsimile, or (v) by electronic internet mail ("*e-mail*"). Facsimile notices shall be deemed valid only to the extent that they are (a) actually received by the individual to whom addressed and (b) followed by delivery of actual notice in the manner described in either (i), (ii), or (iii) above within three business days thereafter at the appropriate address set forth below. E-mail notices shall be deemed valid only to the extent that they are (a) opened by the recipient on a business day at the address set forth below, and (b) followed by delivery of actual notice in the manner described in either (i), (ii), or (iii) above within three business days thereafter at the appropriate address set forth below. Unless otherwise provided in this Agreement, notices shall be deemed received after the first to occur of (a) the date of actual receipt; or (b) the date that is one business day after deposit with an overnight courier as evidenced by a receipt of deposit; or (c) the date that is three business days after deposit in the U.S. mail, as evidenced by a return receipt. By notice complying with the requirements of this Section each party to this Agreement shall have the right to change the address or the addressee, or both, for all future notices and communications to them, but no notice of a change of addressee or address shall be effective until actually received.

Notices and communications to the Village shall be addressed to, and delivered at, the following address:

Village of Glen Ellyn
535 Duane Street
Glen Ellyn, IL 60137
Attn: Planning and Development Director

Notices and communications to the Owner shall be addressed to, and delivered at, the following address:

_____
_____
_____
_____
_____

IN WITNESS WHEREOF, the parties have caused this Annexation Agreement to be executed by their duly authorized officers or individually, as the case may be, on _____, 2013.

VILLAGE OF GLEN ELLYN
A Municipal Corporation:

Village of Glen Ellyn
535 Duane Street
Glen Ellyn, IL 60137

BY: _____
Village President

ATTEST:

BY: _____
Village Clerk

OWNER:

_____

BY: _____

SUBSCRIBED AND SWORN to before me this 13th day of August, 2013.

_____
Notary Public

OFFICIAL SEAL
PATRICIA A. UNDERHILL
NOTARY PUBLIC, STATE OF ILLINOIS
My Commission Expires 01/27/2014

STATE OF ILLINOIS)
) SS
COUNTY OF DU PAGE)

I, the undersigned, a Notary Public, in and for the County and State aforesaid, DO HEREBY CERTIFY, that ALEXANDER W. DEMOS personally known to me to be the President of the Village of Glen Ellyn, an Illinois municipal corporation, and CATHERINE GALVIN, personally known to me to be the Clerk of said corporation, and personally known to me to be the same persons whose names are subscribed to the foregoing instrument, appeared before me this day in person and severally acknowledged that as such President and Clerk, they signed said instrument as the President and the Clerk of said corporation, and caused the corporate seal of said corporation to be affixed thereto, pursuant to authority, given by the Board of Trustees of said corporation as their free and voluntary act, and as the free and voluntary act of said corporation, for the uses and purposes therein set forth.

Given under my hand and official seal, this 10th day of SEPTEMBER, 2013.

Patricia A. Underhill
Notary Public

My Commission Expires: 01/27/2014

OFFICIAL SEAL
PATRICIA A. UNDERHILL
NOTARY PUBLIC, STATE OF ILLINOIS
My Commission Expires 01/27/2014

STATE OF ILLINOIS)
) SS
COUNTY OF DUPAGE)

I, the undersigned, a Notary Public in and for the County of DuPage, Illinois, DO HEREBY CERTIFY that LYNNEA R. HERLIEN, personally known to me to be the same person whose name is subscribed in the foregoing instrument, appeared before me this day in person, and acknowledged that he signed, sealed and delivered said instrument as his free and voluntary act, for the uses and purposes therein set forth.

Given under my hand and official seal this 13th day of AUGUST, 2013.

Patricia A. Underhill
Notary Public

My Commission Expires: 01/27/2014

OFFICIAL SEAL
PATRICIA A. UNDERHILL
NOTARY PUBLIC, STATE OF ILLINOIS
My Commission Expires 01/27/2014

EXHIBIT A
LEGAL DESCRIPTION

LOTS 1 AND 2 IN HILL OAK SUBDIVISION, BEING PART OF THE NORTHEAST QUARTER OF SECTION 12, TOWNSHIP 39 NORTH, RANGE 10 EAST OF THE THIRD PRINCIPAL MERIDIAN, ACCORDING TO THE PLAT THEREOF RECORDED MAY 11, 1970 AS DOCUMENT NUMBER R70-14300 AND CERTIFICATE OF CORRECTION RECORDED MAY 21, 1970 AS DOCUMENT NUMBER R70-15844 IN DUPAGE COUNTY, ILLINOIS.

P.I.N.s: 05-12-207-032 and 05-12-207-033

Commonly known as 21W180 Hill Avenue

X:\Plandev\PLANNING\ANNEXATIONS\Hill Avenue\Draft Agreement Noorlag 083010.doc

EXHIBIT B

PETITION FOR ANNEXATION
VILLAGE OF GLEN ELLYN, ILLINOIS

TO THE GLEN ELLYN VILLAGE BOARD:

Petitioners on oath state as follows:

1. That the undersigned are the sole Owner of record of all of the property described in Attachment A and commonly known as 21W180 Hill Avenue with P.I.N.s: of 05-12-207-032 and 05-12-207-033 (Subject Realty).

2. That this petition is executed by all of the owner(s) of record of the Subject Realty.

3. That no electors reside on the Subject Realty or, in the alternative, at least fifty-one percent (51%) of the electors residing on the Subject Realty have executed this petition.

4. That no portion of the property is within the corporate limits of any municipality.

5. That the Subject Property is either contiguous to the Village of Glen Ellyn, will be at the time of annexation, or may be contiguous when combined with other property annexing to the Village of Glen Ellyn.

6. That the property which the Petitioners desire to have annexed to the Village of Glen Ellyn is the property that is described in Attachment A attached hereto and made a part hereof.

7. That this Petition shall be in full force and effect from and after the date hereof and until the property is annexed to the Village of Glen Ellyn in agreement with State Law.

WHEREFORE, the applicants' petition that the property be annexed by ordinance to the Village of Glen Ellyn, Illinois, is in accordance with the appropriate statutes.

The undersigned, on oath, state that the undersigned have read the foregoing Petition for Annexation, have knowledge of the allegations contained therein, and that said allegations are true and correct to the best of the Petitioners' knowledge.

Owner of Record of Subject Property:
Signature: _____
Print Name: _____
Date: _____

Subscribed and sworn to before me this
_____ day of _____, 20__
_____
NOTARY PUBLIC

Signature: _____
Print Name: _____
Date: _____

Subscribed and sworn to before me this
_____ day of _____, 20__
_____
NOTARY PUBLIC

N

1"=50'

PLAT TO ACCOMPANY EASEMENT GRANTED TO
THE VILLAGE OF GLEN ELLYN
OVER PART OF LOT 1 OF HILL OAK SUBDIVISION IN THE
NE QUARTER OF SECTION 12 TOWNSHIP 39 NORTH
RANGE 10 EAST OF THE THIRD PRINCIPAL MERIDIAN, IN
THE TOWNSHIP OF MILTON, DUPAGE COUNTY, ILLINOIS

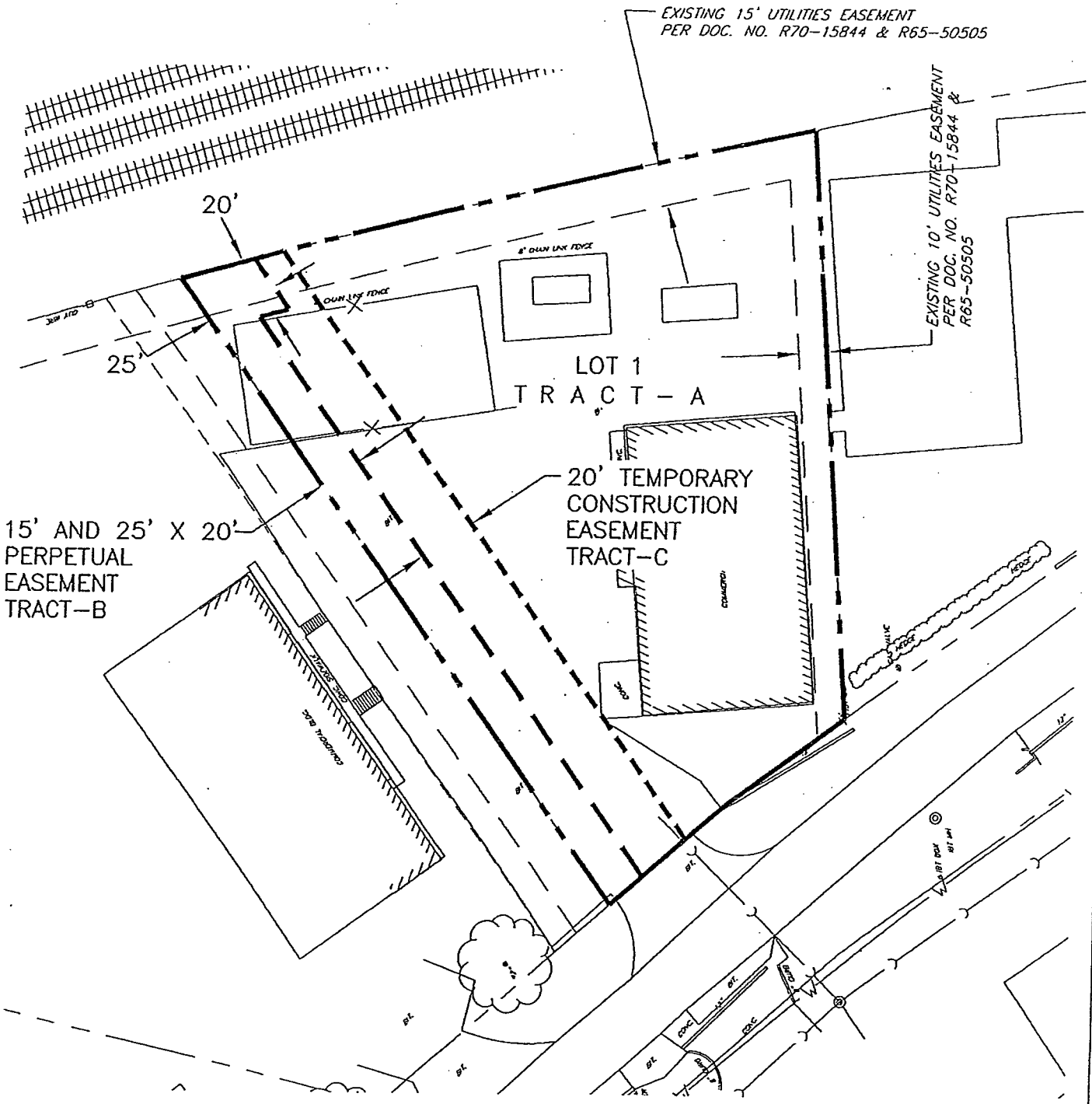

WALTER E. DEUCHLER ASSOCIATES, INC.
Consulting Engineers — Aurora, Illinois

SHEET 1 OF 2

VISIONS

CAD DWG:\GE\05036\EASEMENTS.DWG

SIGNED LAM	APPROVED JWF	BOOK XXX	JOB NUMBER	PLAT TO ACCOMPANY EASEMENT TO THE VILLAGE OF GLEN ELLYN LOT 1 OF HILL OAK SUBDIVISION
DRAWN LAM	DATE 08/05/09	SCALE 1"=50'	200-05036-00	

LEGAL DESCRIPTIONS

TRACT A (PARENT TRACT):

LOT 1 OF HILL OAK SUBDIVISION BEING A SUBDIVISION IN THE NORTHEAST ¼ OF SECTION 12, TOWNSHIP 39 NORTH, RANGE 10, EAST OF THE THIRD PRINCIPLE MERIDIAN, ACCORDING TO THE PLAT THEREOF RECORDED MAY 11, 1970 AS DOCUMENT R70-14300 AND CERTIFICATE OF CORRECTION RECORDED MAY 21, 1970 AS DOCUMENT R70-15844 IN DUPAGE COUNTY, ILLINOIS.

TRACT B (PERPETUAL EASEMENT):

THE SOUTH WESTERLY 15 FEET AND THE NORTH EASTERLY 10 FEET OF THE SOUTH WESTERLY 25 FEET OF THE NORTH WESTERLY 20 FEET OF LOT 1 OF HILL OAK SUBDIVISION BEING A SUBDIVISION IN THE NORTHEAST ¼ OF SECTION 12, TOWNSHIP 39 NORTH, RANGE 10, EAST OF THE THIRD PRINCIPLE MERIDIAN, ACCORDING TO THE PLAT THEREOF RECORDED MAY 11, 1970 AS DOCUMENT R70-14300 AND CERTIFICATE OF CORRECTION RECORDED MAY 21, 1970 AS DOCUMENT R70-15844 IN DUPAGE COUNTY, ILLINOIS (AS MEASURED AT RIGHT ANGLES TO THE SOUTH WESTERLY AND NORTH WESTERLY LINES THEREOF).

TRACT C (TEMPORARY CONSTRUCTION EASEMENT):

THE NORTHEASTERLY 20 FEET OF THE SOUTHWESTERLY 35 FEET OF LOT 1 OF HILL OAK SUBDIVISION BEING A SUBDIVISION IN THE NORTHEAST ¼ OF SECTION 12, TOWNSHIP 39 NORTH, RANGE 10, EAST OF THE THIRD PRINCIPLE MERIDIAN, ACCORDING TO THE PLAT THEREOF RECORDED MAY 11, 1970 AS DOCUMENT R70-14300 AND CERTIFICATE OF CORRECTION RECORDED MAY 21, 1970 AS DOCUMENT R70-15844 IN DUPAGE COUNTY, ILLINOIS (AS MEASURED AT RIGHT ANGLES TO THE SOUTH WESTERLY LINE THEREOF).

STATE OF ILLINOIS
COUNTY OF DUPAGE

THIS IS TO CERTIFY THAT THE PLAT HEREON DRAWN WAS PREPARED BY WALTER E. DEUCHLER ASSOCIATES, INC., AN ILLINOIS PROFESSIONAL LAND SURVEYING CORPORATION, FOR THE PURPOSE OF DELINEATING THE LIMITS OF AN EASEMENT. IT IS FURTHER CERTIFIED THAT SAID PLAT WAS PREPARED FROM EXISTING RECORDS AND THAT NO FIELD LAND SURVEY WAS PERFORMED.

DATED AT AURORA, ILLINOIS, THIS _____ DAY OF _____, 2009.

_____
ILLINOIS PROFESSIONAL DESIGN
CORPORATION NO. 1830

PREPARED BY AND RETURN TO: WALTER E. DEUCHLER ASSOCIATES, INC.
230 WOODLAWN AVENUE
AURORA, IL 60506

WALTER E. DEUCHLER ASSOCIATES, INC. *Consulting Engineers — Aurora, Illinois*	SHEET 2 OF 2
VISIONS CAD DWG:\GE\05036\EASEMENTS.DWG SIGNED LAM APPROVED JWF BOOK XXX DRAWN LAM DATE 08/05/09 SCALE NA JOB NUMBER 200-05036-00	PLAT TO ACCOMPANY EASEMENT TO THE VILLAGE OF GLEN ELLYN LOT 1 OF HILL OAK SUBDIVISION

ANNEXATION AGREEMENT

This Annexation Agreement ("Agreement") is made and entered into this 9th day of SEPTEMBER, 2013, by and between the VILLAGE OF GLEN ELLYN, an Illinois municipal corporation having its principal office in DuPage County, Illinois ("Village"), and G. VINCENT CUYLER AND BARBARA J. CUYLER ("Owners"). The Village and Owners are collectively referred to as ("Parties").

RECITALS

A. The Owners are the Owners of record of two adjacent parcels of land totaling 1.08 acres commonly known as 21W200 Hill Avenue. The Property is located on the north side of Hill Avenue between Illinois Route 53 and Walnut Road and is not currently contiguous to the Village of Glen Ellyn. The subject Property is legally described on ***Exhibit "A"*** attached hereto and is identified for real estate purposes with P.I.N.s of 05-12-207-037 and 05-12-207-038 ("Property"). The Property is currently improved.

B. The Village is an Illinois home rule municipal corporation, having its principal office at 535 Duane Street, Glen Ellyn, Illinois.

C. The Owners desire to annex the Property to the Village, as soon as reasonably practicable following the establishment of contiguity between the corporate boundaries of the Village and the Property, pursuant to and in accordance with Section 7-1-8 of the Illinois Municipal Code, 65 ILCS 5/7-1-8, and agree to do all things necessary to assist in that process when the Village so requests, including the execution and delivery to the Village Clerk of a notarized annexation petition, which petition shall strictly conform to ***Exhibit "B"*** to this Agreement ***("Annexation Petition").***

D. The building on the western parcel is currently served by well water and the building on the eastern parcel is currently served by water from the Village of Lombard.

E. The Owners desire to disconnect the eastern parcel from the Lombard water system and connect it to the Village of Glen Ellyn water system upon Glen Ellyn water becoming available and to also connect the western parcel to the Village of Glen Ellyn water system.

F. The western parcel is currently served by a septic system and the eastern parcel is currently served by Village of Lombard sanitary sewer.

G. The Owners desire to disconnect the eastern parcel from the Lombard sanitary sewer system and connect the eastern parcel to the Village of Glen Ellyn sanitary sewer system upon Glen Ellyn sanitary sewer becoming available to the Property and to also connect the western parcel to the Village of Glen Ellyn sanitary sewer system.

H. A public hearing to consider this Agreement was noticed in the Daily Herald on AUGUST 22, 2013 and was held by the Village President and Board of Trustees on SEPTEMBER 9TH, 2013.

I. The Village has published all notices as required by the Illinois Municipal Code 65 ILCS 5/11-15.1-3 *et seq.*

I. The annexation of the Property shall extend the corporate limits of the Village to the far side of any adjacent highway not heretofore annexed to any other municipality.

K. All other matters, in addition to those specifically referred to above, which are included in this Agreement, have been considered by the Parties, and the annexation of the Property will inure to the benefit and improvement of the Village by increasing the taxable value of the real property within the Village's corporate limits, extending the corporate limits and jurisdiction of the Village to the limits of the Property, promoting the sound planning and development of the Village, and otherwise enhancing and promoting the general welfare of the Village residents and taxpayers.

NOW, THEREFORE, the Owners and Village, in consideration of the mutual covenants herein contained, agree as follows:

1. Incorporation of Recitals. The recitals above are hereby incorporated by reference into this Agreement.

2. Legal Conformance with Law. This Agreement is made pursuant to and in accordance with the provisions of the Village of Glen Ellyn Village Code, and its home rule powers, as established in the Illinois Revised Statutes and the Illinois Constitution.

3. Annexation. Upon notification by the Village that the Property has become, in the opinion of the Village, adjacent and contiguous to the Village, the Owners (if still holding title to any portion of the Property) and each grantee(s) shall within 30 days (a) file a fully executed Annexation Petition in a form approved by the Village Attorney and substantially in accordance with the form of ***Exhibit "B"*** attached to this agreement and (b) provide Owners' proof of Ownership of the Property. A Plat of Annexation for the Property shall also be prepared by the Village. Upon, but not before the Village's receipt of the Annexation Petition, the Owners' proof of Ownership, and preparation of a Plat of Annexation, the Village's Corporate Authorities may adopt a valid and binding Annexation Ordinance providing for the annexation of the Property and any adjacent rights-of-way to the Village pursuant to Section 7-1-8 of the Illinois Municipal Code, 65 ILCS 5/7-1-8. The Village Clerk shall then promptly cause the Annexation Ordinance, Plat of Annexation, and related documents, to be recorded in the Office of the DuPage County Recorder.

Alternatively, at the option of the Village, within 30 days after notice from the Village to do so, and subject to the provisions of 65 ILCS 5/7-1-2 et. seq., or 65 ILCS 5/7-1-11, as amended, the Owners and/or their successors and assigns shall join in, and properly execute, an Annexation Petition to be filed with the Circuit Court of the Eighteenth Judicial Circuit, DuPage County, Illinois, and shall cooperate with the prosecution of the Petition before said court, provided, however, that the costs of any such litigation shall not be the responsibility of the Owners.

If all or a portion of the Property is conveyed prior to the annexation of the Property to the Village, whether by the Owners or other subsequent grantor, any contract for sale or other agreement relating to each and every such conveyance shall contain an acknowledgement by the grantee of the existence of this Agreement and the requirement that upon the Property becoming, in the opinion of the Village, adjacent and contiguous to the Village, the Property will be annexed to the Village. In addition, each such contract or other agreement shall contain an agreement by the grantee(s) to do all things necessary or appropriate to cause the Property to be duly and validly annexed to the Village, including, but not limited to, execution of an Annexation Petition.

Should a court of competent jurisdiction determine that annexation of the Property was defective because of the failure of the Parties to follow a procedural requirement constituting a valid precondition to proper annexation of the Property, the Parties, including the successors and assigns of the Owners, agree to promptly cause the Property to be reannexed to the Village in a manner that satisfies all procedural requirements.

Should a court of competent jurisdiction determine that annexation of the Property by the Village was without lawful authority (i.e., lack of contiguity), the Parties agree that this Agreement shall be deemed a Pre-Annexation Agreement authorized pursuant to 65 ILCS 5/11-15.1-1, as amended, and shall remain in full force and effect to the extent permitted by law. Thereafter, should the Property become contiguous to the Village, the Parties, including the successors and assigns of the Owners, agree to promptly take all necessary steps as may then be provided by law to perfect the annexation of the Property to the Village.

4. Zoning. Within six (6) months of the approval of this Agreement, the Village will hold a public hearing and create a new light industrial zoning district. The Owners will receive advance notice of all public meetings and hearings of the Glen Ellyn Plan Commission at which the new light industrial zoning district is discussed. Because the parties to this Agreement desire to move quickly to cause the execution of this Annexation Agreement, the public hearing, before the Plan Commission required by law to take place before the Village Board can definitely act upon the light industrial zoning district, will not have yet taken place prior to the execution of this Agreement. For this reason, in the event that the Village does not within six (6) months of the date of the execution of this Agreement, approve a new light industrial zoning district, the Agreement shall be void and all the promises and obligations of the Owners shall be terminated. If, however, as is anticipated, the Village does adopt the aforementioned light industrial zoning district, it shall, upon the annexation of the subject Property, grant the light industrial zoning district to the subject Property.

Any existing use or condition of the Property, upon annexation, that does not comply with the requirements of Glen Ellyn's Zoning Code may continue and will be considered a permitted nonconforming use. The Owner's most current plat of survey documenting the existing conditions of the Property shall be submitted to the Village within thirty (30) days of approval of this Agreement and used in conjunction with aerial photographs and other plans, plats and similar documents to evidence the current uses and conditions of the site. Notwithstanding anything herein to the contrary, following annexation, any new tenants occupying the building shall conform to the use regulations of the applicable Village zoning district.

5. Water Service. The Owners desire to connect the eastern parcel to the Glen Ellyn water system upon Glen Ellyn water becoming available to the Property. The Owners agree to allow the Village to disconnect the eastern parcel from the Lombard water system and connect the eastern parcel to the Glen Ellyn water system upon Glen Ellyn water becoming available to the Property. The Owners further agree to connect the western parcel to the Glen Ellyn water system within five (5) years of Glen Ellyn water becoming available to the Property. The Owners shall meet all applicable ordinance requirements pertaining to such connections, including upgrades and other necessities. The Owners shall not be required to pay their proportionate share of any water main extension by the Village. The Village further agrees to waive all permit fees, connection fees and building permit deposits related to connecting the Owners' private service line from the eastern parcel to the Village's water main. The Owners shall pay all applicable permit fees, connection fees and building permit deposits at the time the western parcel is connected to the Glen Ellyn water system.

At the time that the Glen Ellyn water system is available to the Property, the Village of Glen Ellyn shall make a good faith effort to connect the eastern parcel and provide a suitably sized water service line connection terminating at a valve or B-box for future connection of the western parcel by the Owners. If improvements are needed to correct deficiencies or Owner responsible upgrades are required to make the connection to the eastern parcel, the Owner agrees to hire a contractor and to pay up to $5000 of the private costs and charges associated with the connection of a private water service line to the Village of Glen Ellyn's water main with the Village paying any amount over $5000. The Owners agree to hire a contractor and to pay all private costs and all charges associated with the connection of a private water service line to the Village of Glen Ellyn's water main for the western parcel. Any water service connections shall be inspected by Village staff to ensure that they are constructed in accordance with Village standards.

In the event that the Owners fail to petition Glen Ellyn for annexation in accordance with Section 3 above or fail to comply with any other provision of this Annexation Agreement, Glen Ellyn may, at its sole option, discontinue water service to the property and enforce this Agreement in a court of appropriate jurisdiction by specific performance.

6. Sanitary Sewer Service. The Owners desire to connect the Property to the Glen Ellyn sanitary sewer system upon Glen Ellyn sanitary sewer becoming available to the Property. The Owners agree to allow the Village to disconnect the eastern parcel from the Lombard sanitary sewer system and connect the eastern parcel to the Glen Ellyn sanitary sewer system upon Glen Ellyn sanitary sewer becoming available to the Property. The Owners further agree to connect the western parcel to the Glen Ellyn sanitary sewer system within five (5) years of Glen Ellyn sanitary sewer becoming available to the Property. The Owners shall meet all applicable ordinance requirements pertaining to such connections, including upgrades and other necessities. The Owners shall not be required to pay their proportionate share of any sanitary sewer extension by the Village. The Village agrees to waive all permit fees, connection fees and building permit deposits related to connecting the Owners' private service line from the eastern parcel to the Village's sanitary sewer main. The Owners shall pay all applicable permit and connection fees and building permit deposits at the time that the western parcel is connected to the Glen Ellyn sanitary sewer main.

At the time that the Glen Ellyn sanitary sewer system is available to the Property, the Village of Glen Ellyn shall make a good faith effort to connect the eastern parcel and provide a suitably sized sanitary sewer service line connection terminating at a clean out for future connection of the western parcel by the Owners. If improvements are needed to correct deficiencies or Owner responsible upgrades are required to make the connection to the eastern parcel, the Owner agrees to hire a contractor and to pay up to $5000 of the private costs and charges associated with the connection of a private water service line to the Village of Glen Ellyn's water main with the Village paying any amount over $5000. The Owners agree to hire a contractor and to pay all private costs and all charges associated with the connection of a private sanitary sewer service line to the Village of Glen Ellyn sanitary sewer main for the western parcel. Any sanitary sewer connections shall be inspected by Village staff to ensure that they are constructed in accordance with Village standards.

In the event that Owners fail to petition Glen Ellyn for annexation in accordance with Section 3 above or fail to comply with any other provision of this Annexation Agreement, Glen Ellyn may, at its sole option, discontinue sanitary sewer services to the Property and enforce this Agreement in a court of appropriate jurisdiction by specific performance.

7. Rates for Water and Sanitary Sewer Service. Until such time as the Property is annexed to Glen Ellyn, Owners agree to pay the usual and customary charges for water and sanitary sewer service for customers outside of Glen Ellyn's corporate limits, as may be established from time-to-time by the corporate authorities of Glen Ellyn. Upon annexation, the Owners shall pay the same rates for water and sanitary sewer services charged to customers inside the Village limits.

8. Fire Protection. The Property is currently served by the Village of Lombard Fire Department. Upon approval of this annexation agreement, the property will be disconnected from the Lombard Fire District and fire service will be provided by the Glen Ellyn Volunteer Fire Company. The Owners agree to pay their proportionate share of the cost of fire service by either becoming part of a Special Service Area approved by the Village on November 23, 2009 by the adoption of Ordinance 5822 and recorded with the DuPage County Recorder of Deeds as document number R2009-191157 which imposes a special tax on unincorporated properties for fire protection services provided by the Glen Ellyn Volunteer Fire Company (hereinafter "Fire SSA") or upon receiving an annual invoice, pay an amount equal to what would be charged against the Property, if the Property were included in the Fire SSA. Payments to support the Glen Ellyn Voluntary Fire Company will continue to be collected until such time as the Property is annexed to Glen Ellyn. Following annexation, the Village shall reimburse the Owners the proportional amount paid for fire service following the date of annexation and remove the Property from the Fire SSA, if appropriate.

In accordance with existing state law, the Lombard Fire District may require the Village to pay it an amount of money which, over a period of years, equals three (3) years of lost Fire Protection District taxes. If the Village is requested and obligated by law to pay lost real estate tax revenue to the Lombard Fire District, the Owner shall reimburse the Village for the actual amounts which the Village is required to pay.

9. Grading Easement. The Owners agree to negotiate in good faith an agreement granting the Village a grading easement on the east end of the Property as necessary in order to accommodate the reconstruction of the Hill Avenue bridge.

10. Village Codes. While the Property remains in unincorporated DuPage County, it shall be developed pursuant to the building and zoning regulations of DuPage County, except as otherwise provided herein. From and after the date of annexation of the Property to the Village, the Property shall be maintained in accordance with and pursuant to the Village Code of Glen Ellyn, including the building, subdivision, and zoning regulations contained therein, except as otherwise noted in Section 4 of this Agreement. Notwithstanding anything above to contrary, the Owners shall abide, prior to annexation, with all ordinance and regulations of the Village that relate to sanitary sewer service. In addition, the Owners shall with regard to new construction, renovation or expansion, be required to follow the Village Ordinances regarding sprinkler systems prior to and after annexation.

11. Hill Avenue. Hill Avenue shall continue to be maintained by the Village of Lombard until such time as the Property is annexed to Glen Ellyn or Hill Avenue is otherwise incorporated into Glen Ellyn as part of any agreement between Glen Ellyn and Lombard or the property on the south side of Hill Avenue is annexed to Glen Ellyn.

12. Village Address. Upon annexation to the Village, the Village will assign the appropriate Village addresses to the Property.

13. Waiver of Annexation Fee. The Village agrees to waive its usual and customary annexation fee for the Property upon annexation to the Village.

14. Term. The term of this Agreement will be 20 years from the date of execution hereof, which will be deemed to become effective on the date hereof.

15. Annexation Agreement Extension. At the option of the Village, the Village may extend this Annexation Agreement, at its conclusion, for an additional period of up to 20 years for a portion or all of the Property. If the Village wishes to exercise this option, it shall do so in writing not earlier than two years before the expiration of the Annexation Agreement, nor later than three months prior to this Agreement's initial termination date. Notice shall be sent in writing to (i) that entity that has paid the real estate property taxes during one of the last two years for the Property or that portion of the Property for which the Village wishes to extend this Agreement or (ii) to the record title holder of the Property or that portion of the Property for which the Village wishes to extend this Agreement. If the Village decides in its sole and absolute opinion to extend the term of this Agreement, the Village may do so whether or not the Property, or any portion of the Property, has been annexed to the Village. The Village may only extend the term of this Agreement once. In the event that the Village has not exercised the option to extend the term of this Agreement pursuant to this Section, and if the Property has not been annexed to the Village at this Agreement's initial termination date, the Village and the Owners may enter into a new Annexation Agreement in the manner provided by law. If the Village has been providing utility services to the non-annexed Property or any non-annexed

portions of the Property pursuant to this Agreement, it may terminate such utility service at the conclusion of this Agreement; provided, however, that the Village provide not less than one year prior written notice of such termination to (i) that entity that has paid the real estate property taxes during one of the last two years for the Property or that portion of the Property for which the Village desires to terminate any such utility service or (ii) to the record title holder of the Property or any portion of the Property for which the Village desires to terminate any such utility service.

16. General Provisions.

A. Severability. In the event that any portion of this Annexation Agreement will be found to be invalid by any court of competent jurisdiction, such finding of invalidity as to that portion will not affect the validity or enforceability of the balance of this Agreement.

B. Remedies. In addition to all rights and remedies specified in this Agreement, the Village will have the authority to pursue any and all rights and remedies, at law or in equity, to which it is entitled in order to enforce the terms of this Agreement. In the event that the Owners fail to comply, the Village may institute an action for specific performance along with other civil and quasi-criminal actions as permitted by law, and the Village may disconnect the water service. The Owners will be further liable for any attorney fees, court costs and other costs incurred by the Village as a consequence of the Village's enforcement of this provision.

C. Amendment. This Agreement may be amended from time to time with the consent of the parties, pursuant to Statute.

D. Conflict Regulations. The provisions of this Agreement shall supersede the provision of any Village Codes and Ordinances that may be in conflict with the provisions of this Agreement.

E. Enforcement. This Agreement shall be enforceable in any court of competent jurisdiction by either the Owners or the Village, and their respective successors and assigns, by an appropriate action at law or in equity, to secure the performance of the promises, obligations, and covenants in this Agreement, including the specific performance of this Agreement. The laws of the State of Illinois shall govern this Agreement. Any lawsuit enforcement filed against the Village of Glen Ellyn, or its officers, employees or independent contractors may only seek injunction, mandamus or specific performance for the enforcement of the agreement and may not seek damages.

F. Successors and Assigns and Ownership. This Agreement shall inure to the benefit of and be binding upon the Owners and Village and their respective successors and assigns. No conveyance, transfer or assignment of fee title in the Property or of this Agreement shall serve to release the Owners of their duties and obligations already undertaken under this Agreement. Both parties acknowledge by their signature to this Agreement that the statements made in this Annexation Agreement are true and that they have the authority to execute the Agreement and to bind the Village or the Owners.

G. Application of Ordinances. Upon annexation, the Property and its use will be subject to all Village ordinances generally applicable throughout the Village except as herein set forth.

H. Recording. The Village Clerk is hereby directed to cause this Agreement to be recorded with the Recorder of Deeds of DuPage County, following its execution and approval by the Village Board.

I. No Disconnection. Once the Property subject to this Annexation Agreement has been annexed to the Village, the Owners shall not petition the Circuit court to take any other action to cause the Property to be disconnected from the Village during the term of this Annexation Agreement or any extension to that term. In addition, the Owners may not during the term of this Annexation Agreement petition any other municipality or a court to permit annexation to another municipality.

J. Recitals and Exhibits. The recitals set forth in the beginning of this Agreement, and the exhibits attached hereto, are incorporated herein by this reference and shall constitute substantive provisions to this Agreement.

K. Captions and Paragraph Headings. The captions and paragraph headings used herein are for convenience only and shall not be used in construing any term or provision of this Agreement.

17. Notice. Any notice or communication required or permitted to be given under this Agreement shall be in writing and shall be delivered (i) personally, (ii) by a reputable overnight courier, (iii) by certified mail, return receipt requested, and deposited in the U.S. Mail, postage prepaid, (iv) by facsimile, or (v) by electronic internet mail ("*e-mail*"). Facsimile notices shall be deemed valid only to the extent that they are (a) actually received by the individual to whom addressed and (b) followed by delivery of actual notice in the manner described in either (i), (ii), or (iii) above within three business days thereafter at the appropriate address set forth below. E-mail notices shall be deemed valid only to the extent that they are (a) opened by the recipient on a business day at the address set forth below, and (b) followed by delivery of actual notice in the manner described in either (i), (ii), or (iii) above within three business days thereafter at the appropriate address set forth below. Unless otherwise provided in this Agreement, notices shall be deemed received after the first to occur of (a) the date of actual receipt; or (b) the date that is one business day after deposit with an overnight courier as evidenced by a receipt of deposit; or (c) the date that is three business days after deposit in the U.S. mail, as evidenced by a return receipt. By notice complying with the requirements of this Section each party to this Agreement shall have the right to change the address or the addressee, or both, for all future notices and communications to them, but no notice of a change of addressee or address shall be effective until actually received.

Notices and communications to the Village shall be addressed to, and delivered at, the following address:

Village of Glen Ellyn
535 Duane Street
Glen Ellyn, IL 60137
Attn: Planning and Development Director

Notices and communications to the Owners shall be addressed to, and delivered at, the following address:

_____
_____
_____
_____
_____

IN WITNESS WHEREOF, the parties have caused this Annexation Agreement to be executed by their duly authorized officers or individually, as the case may be, on _____, 2013.

VILLAGE OF GLEN ELLYN
A Municipal Corporation:

Village of Glen Ellyn
535 Duane Street
Glen Ellyn, IL 60137

BY: _____
Village President

ATTEST:

BY: _____
Village Clerk

OWNERS:

_____
_____

BY: _____

SUBSCRIBED AND SWORN to before me this 9TH day of AUGUST, 2013.

_____
Notary Public

OFFICIAL SEAL
LOUIS B ARANDA
NOTARY PUBLIC - STATE OF ILLINOIS
MY COMMISSION EXPIRES:03/27/15

STATE OF ILLINOIS)
) SS
COUNTY OF DU PAGE)

I, the undersigned, a Notary Public, in and for the County and State aforesaid, DO HEREBY CERTIFY, that ALEXANDER W. DEMOS personally known to me to be the President of the Village of Glen Ellyn, an Illinois municipal corporation, and CATHERINE GALVIN, personally known to me to be the Clerk of said corporation, and personally known to me to be the same persons whose names are subscribed to the foregoing instrument, appeared before me this day in person and severally acknowledged that as such President and Clerk, they signed said instrument as the President and the Clerk of said corporation, and caused the corporate seal of said corporation to be affixed thereto, pursuant to authority, given by the Board of Trustees of said corporation as their free and voluntary act, and as the free and voluntary act of said corporation, for the uses and purposes therein set forth.

Given under my hand and official seal, this 10th day of SEPTEMBER, 2013.

Patricia A. Underhill
Notary Public

My Commission Expires: 01/27/2014

OFFICIAL SEAL
PATRICIA A. UNDERHILL
NOTARY PUBLIC, STATE OF ILLINOIS
My Commission Expires 01/27/2014

STATE OF ILLINOIS)
) SS
COUNTY OF DUPAGE)

I, the undersigned, a Notary Public in and for the County of DuPage, Illinois, DO HEREBY CERTIFY that G. VINCENT CUYLER, personally known to me to be the same person whose name is subscribed in the foregoing instrument, appeared before me this day in person, and acknowledged that he signed, sealed and delivered said instrument as his free and voluntary act, for the uses and purposes therein set forth.

Given under my hand and official seal this 9TH day of AUGUST, 2013.

OFFICIAL SEAL
LOUIS B ARANDA
NOTARY PUBLIC - STATE OF ILLINOIS
MY COMMISSION EXPIRES:03/27/15

Notary Public

My Commission Expires: 3/27/15

STATE OF ILLINOIS)
) SS
COUNTY OF DUPAGE)

I, the undersigned, a Notary Public in and for the County of DuPage, Illinois, DO HEREBY CERTIFY that BARBARA J. CUYLER, personally known to me to be the same person whose name is subscribed in the foregoing instrument, appeared before me this day in person, and acknowledged that she signed, sealed and delivered said instrument as her free and voluntary act, for the uses and purposes therein set forth.

Given under my hand and official seal this 9TH day of AUGUST, 2013.

OFFICIAL SEAL
LOUIS B ARANDA
NOTARY PUBLIC - STATE OF ILLINOIS
MY COMMISSION EXPIRES:03/27/15

Notary Public

My Commission Expires: 3/27/15

EXHIBIT A
LEGAL DESCRIPTION

PARCEL 1: LOT 1 IN VILLA PARK KITCHENS RESUBDIVISION BEING PART OF THE NORTHEAST QUARTER OF SECTION 12, TOWNSHIP 39 NORTH, RANGE 10 EAST OF THE THIRD PRINCIPAL MERIDIAN, ACCORDING TO THE PLAT THEREOF RECORDED AUGUST 11, 1972 AS DOCUMENT NUMBER R72-47323, ALL IN DUPAGE COUNTY, ILLINOIS,

AND ALSO:

THAT PART OF THE UNION PACIFIC RAILROAD RIGHT-OF-WAY (FORMERLY THE CHICAGO AND NORTHWESTERN RAILROAD RIGHT OF WAY) LYING NORTH OF AND ABUTTING LOT 1 IN VILLAGE PARK KITCHENS RESUBDIVISION AFORESAID, MORE PARTICULARLY DESCRIBED AS FOLLOWS:

COMMENCING AT THE NORTHEAST CORNER OF SAID LOT 2 OF SAID VILLAGE PARK KITCHENS RESUBDIVISION AND RUNNING THENCE WESTERLY ALONG THE NORTH LINE THEREOF, A DISTANCE OF 176.18 FEET TO A POINT OF CURVE IN SAID NORTH LINE; THENCE CONTINUING WESTERLY ALONG THE NORTH LINE OF SAID LOT 2, BEING THE ARC OF A CURVE CONCAVE TO THE SOUTHEAST HAVING A RADIUS OF 3321.38 FEET, WHOSE CENTRAL ANGLE IS 01 DEGREES 16 MINUTES 48 SECONDS, A DISTANCE OF 74.20 FEET (REC. & MEAS.) TO THE NORTHEAST CORNER OF SAID LOT 1 FOR THE POINT OF BEGINNING; RUNNING THENCE WESTERLY ALONG THE NORTH LINE OF SAID LOT , BEING THE ARC OF A CURVE CONCAVE TO THE SOUTHEAST, HAVING A RADIUS OF 3321.38 FEET AND A CENTRAL ANGLE OF 02 DEGREES 04 MINUTES 19 SECONDS, AN ARC DISTANCE OF 120.10 FEET (MEAS., REC.=120.12') THENCE NORTHERLY RADIAL TO THE LAST DESCRIBED CURVE, A DISTANCE OF 12.79 FEET; THENCE EASTERLY A DISTANCE OF 69.97 FEET TO A POINT THAT IS 16.00 FEET NORTHERLY OF (MEASURED RADIALLY THERETO) THE NORTH LINE OF VILLA PARK KITCHENS RESUBDIVISION AS AFORESAID; THENCE CONTINUING EASTERLY ALONG A CURVE CONCAVE TO THE SOUTHEAST, HAVING A RADIUS OF 3,337.21 FEET (DEED, 3,337.38'=CALC.), A CENTRAL ANGLE OF 00 DEGREES 52 MINUTES 17 SECONDS, AND BEING NORMALLY PARALLEL WITH SAID NORTH LINE, AN ARC DISTANCE OF 50.75 FEET; THENCE SOUTHEASTERLY 16.00 FEET TO THE POINT OF BEGINNING, ACCORDING TO DOCUMENT RECORDED MARCH 24, 1995, AS NUMBER R95-034450, ALL IN DUPAGE COUNTY, ILLINOIS.

P.I.N. 05-12-207-037

PARCEL 2:
LOT 2 IN VILLA PARK KITCHENS RESUBDIVISION, BEING A PART OF THE NORTHEAST QUARTER OF SECTION 12, TOWNSHIP 39 NORTH, RANGE 10 EAST OF THE THIRD PRINCIPAL MERIDIAN, ACCORDING TO THE PLAT THEREOF RECORDED AUGUST 11, 1972 AS DOCUMENT NUMBER R72-47323 IN DUPAGE COUNTY, ILLINOIS,

AND, ALSO:

THAT PART OF THE UNION PACIFIC RAILROAD RIGHT OF WAY (FORMERLY THE CHICAGO AND NORTHWESTERN RAILROAD RIGHT OF WAY) LAYING NORTH OF AND ABUTTING LOT 2 IN VILLA PARK KITCHENS RESUBDIVISION AFORESAID, MORE

PARTICULARLY DESCRIBED AS FOLLOWS:

BEGINNING AT THE NORTHEAST CORNER OF SAID LOT 2 AND RUNNING THENCE WESTERLY ALONG THE NORTH LINE THEREOF, A DISTANCE OF 176.18 FEET TO A POINT OF CURVE IN SAID NORTH LINE; THENCE CONTINUING WESTERLY ALONG THE NORTH LINE OF SAID LOT 2, BEING THE ARC OF A CURVE CONCAVE TO THE SOUTHEAST HAVING A RADIUS OF 3321.38 FEET, WHOSE CENTRAL ANGLE IS 01 DEGREE 16 MINUTES 48 SECONDS, A DISTANCE OF 74.20 FEET (REC. & MEAS.) TO THE NORTHWEST CORNER OF SAID LOT 2; THENCE NORTHERLY RADIAL TO THE LAST DESCRIBED CURVE A DISTANCE OF 16.00 FEET; THENCE EASTERLY ALONG A CURVE CONCAVE TO THE SOUTHEAST, HAVING A RADIUS OF 3,337.21 FEET (DEED,3,337.38=CALC.), A CETNRAL ANGLE OF 01 DEGREE 16 MINUTES 50 SECONDS, AND BEING NORMALLY PARALLEL WITH SAID NORTH LINE, A DISTANCE OF 74.60 FEET; THENCE EASTERLY ALONG A LINE THAT IS 16.00 FEET NORTH OF AND PARALLEL WITH SAID NORTH LINE, A DISTANCE OF 176.18 FEET (DEED, 176.22'=MEAS.) TO A POINT THAT IS 16.00 FEET NORTHERLY OF, AS MEASURED AT RIGHT ANGLES TO SAID NORTH LINE, THE NORTHEAST CORNER OF LOT 2, AFORESAID; THENCE SOUTHERLY 16.00 FEET TO THE POINT OF BEGINNING, ACCORDING TO DOCUMENT RECORDED MARCH 24, 1995, AS NUMBER R95-034450, ALL IN DUPAGE COUNTY, ILLINOIS.

P.I.N: 05-12-207-038

COMMONLY KNOWN AS 21W200 HILL AVENUE

X:\Plandev\PLANNING\ANNEXATIONS\Hill Avenue\Draft Agreement Culer 072010.doc

EXHIBIT B

PETITION FOR ANNEXATION
VILLAGE OF GLEN ELLYN, ILLINOIS

TO THE GLEN ELLYN VILLAGE BOARD:

Petitioners on oath state as follows:

1. That the undersigned are the sole owners of record of all of the property described in Attachment A and commonly known as 21W200 Hill Avenue with P.I.N.s: of 05-12-207-037 and 05-12-207-038 (Subject Realty).

2. That this petition is executed by all of the owner(s) of record of the Subject Realty.

3. That no electors reside on the Subject Realty or, in the alternative, at least fifty-one percent (51%) of the electors residing on the Subject Realty have executed this petition.

4. That no portion of the property is within the corporate limits of any municipality.

5. That the Subject Property is either contiguous to the Village of Glen Ellyn, will be at the time of annexation, or may be contiguous when combined with other property annexing to the Village of Glen Ellyn.

6. That the property which the Petitioners desire to have annexed to the Village of Glen Ellyn is the property that is described in Attachment A attached hereto and made a part hereof.

7. That this Petition shall be in full force and effect from and after the date hereof and until the property is annexed to the Village of Glen Ellyn in agreement with State Law.

WHEREFORE, the applicants' petition that the property be annexed by ordinance to the Village of Glen Ellyn, Illinois, is in accordance with the appropriate statutes.

The undersigned, on oath, state that the undersigned have read the foregoing Petition for Annexation, have knowledge of the allegations contained therein, and that said allegations are true and correct to the best of the Petitioners' knowledge.

Owners of Record of Subject Property:
Signature: _____
Print Name: _____
Date: _____

Subscribed and sworn to before me this
_____ day of _____, 20__
_____
NOTARY PUBLIC

Signature: _____
Print Name: _____
Date: _____

Subscribed and sworn to before me this
_____ day of _____, 20__
_____
NOTARY PUBLIC

Village of Glen Ellyn

Ordinance No. 6207 VC

An Ordinance Approving Zoning Code Text Amendments to Create a New I1 Light Industrial Zoning District

---

Adopted by the
President and the Board of Trustees
of the
Village of Glen Ellyn
DuPage County, Illinois
This 13th Day of January, 2014.

Published in pamphlet form by the authority of the President and Board of Trustees of the Village of Glen Ellyn, DuPage County, Illinois, this 14th day of January 14th, 2014.

Ordinance No. 6207-VC

An Ordinance Approving Zoning Code Text Amendments to Create a New I1 Light Industrial Zoning District

Whereas, the Village of Glen Ellyn recently entered into annexation agreements with properties commonly known as 21W180 and 21W200 Hill Avenue; and

Whereas, the aforementioned properties were previously located in the Village of Lombard and zoned to Lombard's light industrial district; and

Whereas, said properties were disconnected from Lombard and are currently located in DuPage County and zoned to DuPage County's I-1 Light Industrial district; and

Whereas, the annexation agreements for 21W180 and 21W200 Hill Avenue require the Village of Glen Ellyn to create a new light industrial zoning district to be applied to these properties upon annexation to Glen Ellyn; and

Whereas, in accordance with this provision, following due and proper publication of notice in the Daily Herald not less than fifteen (15) nor more than thirty (30) days prior thereto, the Plan Commission of the Village of Glen Ellyn conducted a public hearing on December 12, 2013, at which hearing the Plan Commission considered a variety of zoning code text amendments related to the creation of a new light industrial zoning district; and

Whereas, no persons spoke at the public hearing either in favor of or in opposition to the proposed amendments; and

Whereas, after having considered the evidence, testimony and exhibits presented at the December 12, 2013 Plan Commission public hearing, by a vote of six (6) "yes" and zero (0) "no", the Plan Commission recommended approval of the proposed zoning code text amendments as set forth in the minutes of their December 12, 2013 meeting, a draft of which is attached hereto as

Exhibit "A"; and

Whereas, the President and Board of Trustees of the Village of Glen Ellyn have reviewed the evidence and testimony presented at the December 12, 2013 Plan Commission hearing and find that the proposed zoning code text amendments are consistent the Glen Ellyn's 2001 comprehensive plan and would promote the public health, safety, and general welfare of the Village and, therefore, deem it in the best interest of the Village to accept the recommendation of the Plan Commission and to amend the Glen Ellyn Zoning Code to create a new I1 light industrial zoning district classification.

Now, Therefore be it Ordained by the President and Board of Trustees of the Village of Glen Ellyn, DuPage County, Illinois, in the exercise of its home rule powers, as follows:

Section One: The draft minutes from the December 12, 2013 Glen Ellyn Plan Commission meeting, a copy of which is attached hereto as Exhibit "A", is hereby accepted by the Village Board, and the findings of fact and conclusions set forth therein and in the preambles above are hereby adopted by the President and Board of Trustees.

Section Two: The Glen Ellyn Zoning Code is hereby amended as set forth in Exhibits "B" attached hereto.

Section Three: The Director of Planning and Development is hereby directed to cause the text of the Glen Ellyn Zoning Code to be amended as approved by this Ordinance. Said amendments shall be inserted in proper order into the Zoning Code, and said Zoning Code and shall be published and made available for inspection and purchase by the general public.

Passed by the President and Board of Trustees of the Village of Glen Ellyn, Illinois, this 13th day of January, 2014.

Ayes: Trustees Burke, Clark, Elliott, Sadesic, McGinley and O'Shea

Nays: Ø

Absent: ϕ

Approved by the Village President of the Village of Glen Ellyn, Illinois, this 13th day of January, 2014.

Village President of the
Village of Glen Ellyn, Illinois

Attest:

Village Clerk of the
Village of Glen Ellyn, Illinois

(Published in pamphlet form and posted on the 14th day of January, 2014).

X:\Plandev\PLANNING\CODES\ZONING CODE\ZTA\Ordinances\I1 District.doc

workers. Ms. Stegall responded to Plan Commissioner Lannen that an item, if appropriate, can be forwarded to the Planning and Development Director for her authority to determine that a use is similar to other uses that are allowed in a district in terms of the impacts they would have and to allow those uses. Ms. Stegall responded to Plan Commissioner Allen that the country club would most likely be zoned to the Conservation Recreation District. Plan Commissioner Whalen suggested adding "indoor" to the salt storage facility item (no. 23) and Ms. Stegall agreed.

Persons in Favor of or in Opposition to the Proposed Request

No persons spoke in favor of or in opposition to the proposed request.

Plan Commissioner Heming-Littwin moved, seconded by Plan Commissioner Allen, to close the public hearing. The motion carried unanimously by voice vote.

Motion

Plan Commissioner Heming-Littwin moved, seconded by Plan Commissioner Mansfield, to create a Light Industrial Zoning District Standards with the following changes: Add Micro-Beverage and Food Manufacturing as a permitted Special Use, add "noise" and "odors" as Factors 4 and 5 to the PUD Evaluation Factors, remove No. 6, church and temple, from Special Uses, add "Indoor" to no. 23, Salt Storage Facility, and add Private Utility Substation as a special use.

The motion carried unanimously with six (6) "yes" votes and zero (0) "no" votes as follows: Plan Commissioners Allen, Heming-Littwin, Lannen, Mansfield, Whalen and Vice Chairman Strayer voted yes.

PUBLIC HEARING – ZONING CODE TEXT AMENDMENTS

PUBLIC HEARING REGARDING PROPOSED ZONING CODE TEXT AMENDMENTS RELATED TO SUCH THINGS AS FENCE SPACING AND HEIGHT, GENERATOR SETBACKS, DEVELOPER DONATIONS, OUTDOOR SEATING AND PERMITTED USES.

Plan Commissioner Mansfield moved, seconded by Plan Commissioner Heming-Littwin, to open the public hearing. The motion carried unanimously by voice vote.

Staff Presentation

Village Planner Michele Stegall stated that a variety of Zoning Code text amendments are being presented to the Plan Commission for their consideration. She pointed out some of the changes that have been made to the list of amendments since the Plan Commission received the draft as follows: Ms. Stegall stated that the fence regulations have been amended in response to a comment by a Plan Commissioner who stated that fences often need to be located above ground because the ground slopes, drainage needs to be allowed under the

fence or the wood would rot if it was allowed to touch the ground. She stated that an allowance has been added to allow the fence to be located up to 4 inches above ground to accommodate those situations and added that the 4 inches is not included in the height calculations. Ms. Stegall also stated that photos were submitted showing the caps on masonry columns located at intervals on fences that are located a foot or two above the height of the fence. She added that in an effort to allow creativity, no limitation has been created to limit the height of those columns.

Questions/Comments from the Plan Commission

Plan Commissioner Whalen asked that staff research whether or not there should be a limitation on the height and spacing of masonry fence caps. Plan Commissioner Mansfield suggested leaving the height at 8 feet and having staff research this item and return with a text amendment, if necessary. He added that there should be a height limitation regarding caps, and Plan Commissioner Heming-Littwin suggested that the height of a cap located on top of a masonry column should be no higher than the height of the masonry column up to the height of the post or no more than a total of 9 feet. The Plan Commissioners agreed with that recommendation. Ms. Stegall also stated that a proposed change was previously made to allow a fence to be 33 percent open as opposed to 50 percent open for the front and corner side yard, and she displayed some photographs of various types of fence spacing. Ms. Stegall responded to Vice Chairman Strayer that an additional 6 inches is allowed for a fence of any size but she was unsure how long the 50 percent open fence has been in effect in the Village. Plan Commissioner Whalen pointed out that in b. Height: 3), 6 feet should be the maximum for a fence located no closer to the street than the principal structure on a lot, and Ms. Stegall agreed that should be corrected. Ms. Stegall also stated that a change has been proposed to allow generators as a permitted use in a required side yard and corner side yard. She added that generators would need to be screened from view from the public way. Ms. Stegall responded to Plan Commissioner Whalen that as proposed generator testing could be done between 9:00 a.m. and 5:00 p.m. seven (7) days per week. Ms. Stegall also stated that staff would like to withdraw No. 8 Developer Donations at this time as many communities only apply developer's donations to PUDs and subdivisions.

Plan Commissioner Whalen requested that generators be allowed a minimum of 2 feet 6 inches (perhaps 2 feet) off of the lot line for all lots and that, if necessary, generators be allowed in the front yard with a review per staff. He explained that on a 50-foot wide lot, most manufacturers

require a generator to be 18 inches from the home and the units are approximately 27 inches wide; therefore the unit would be a couple of inches into the 3-foot setback. Ms. Stegall explained for Plan Commissioner Heming-Littwin that accessory structure setback requirements, in general, are 5 percent of the lot width. She also stated that air conditioners are allowed in front yards. Plan Commissioner Whalen also requested that the Planning and Development Director be allowed to permit a generator in a front yard if there is no other viable location on the lot. Vice Chairman Strayer was not in favor of generators in the

front yard although the other Plan Commissioners were supportive of generators in the front yard. Ms. Stegall responded to Plan Commissioner Allen that sump pump discharge is covered in the Stormwater Ordinance.

Persons in Favor of or in Opposition to the Proposed Request

No persons spoke in favor of or in opposition to the proposed amendments.

Plan Commissioner Heming-Littwin moved, seconded by Plan Commissioner Allen, to close the public hearing. The motion carried unanimously by voice vote.

Motion

Plan Commissioner Heming-Littwin moved, seconded by Plan Commissioner Mansfield, to amend the Zoning Code as follows: Remove Section 8, change fence height in 11b.3) to a maximum of 6 feet, change fence in C3 to include no more than the height of the column or a maximum of 9 feet, to change 21B to not less than 2.5 feet from the side or rear property line provided it is tested only between the hours of 9:00 a.m. and 5 p.m. once per week for a maximum of 30 minutes, if time allows prior to this item being presented to the Village Board that staff research masonry columns from a design standpoint, and to allow the Planning and Development Director authority to allow generators in front yards.

The motion carried unanimously with six (6) "yes" votes and zero (0) "no" votes as follows: Plan Commissioners Heming-Littwin, Mansfield, Allen, Lannen, Whalen and Vice Chairman Strayer voted yes.

Staff Report

Ms. Stegall reminded the Plan Commissioners about the holiday party next Thursday evening at 7:30 p.m.

There being no further business before the Plan Commission, the meeting was adjourned at 9:19 p.m.

Respectfully submitted,

Michele Stegall
Village Planner

Barbara Utterback
Recording Secretary

PROPOSED LIGHT INDUSTRIAL ZONING DISTRICT STANDARDS
12/31/13

Bold = New Text
~~Strike Through~~ = Deleted Text

10-3-1: INTENT

Insert new Section 10-3-1(Q) to read as follows:

(Q) **I1 – Light Industrial Zoning District: The I1 District is intended to provide an environment suitable for industrial activities that do not create appreciable nuisance or hazards and which can be located harmoniously on the same lot with office uses and in relatively close proximity to residential areas.**

10-2-2: DEFINITIONS:

Add a new definition for "Animal Day Care" to read as follows:

Animal Day Care: A facility that provides same day short-term keeping, boarding or maintaining of animals that do not require medical treatment and which does not include overnight boarding.

Micro Food and Beverage Manufacturing: An establishment not exceeding 5,000 square feet in floor area where food, beverages, and/or alcohol are processed or otherwise prepared and which may include the distribution of such items.

Private Utility Use or Facility. Utilities that are not subject to Village acceptance for operation or maintenance. For purposes of this Code, private utilities may include such things as natural gas lines or facilities, power lines and plants, communication lines and facilities (with the exception of telecommunication uses) and similar uses and facilities.

---

i
Insert a new Section 10-4-19 to read as follows:

10-4-19: I1 – LIGHT INDUSTRIAL DISTRICT

(A) **PERMITTED USES***

1. **Artist Studio**
2. **Automobile car wash**
3. **Automobile repair and service**
4. **Automotive vehicle rental**

5. Building material sales establishment; plumbing, heating, ventilating and electrical equipment and fixture service and repair; machinery and equipment sales, service and rental; household appliance repair; cabinet making and custom woodworking uses
6. Business, medical or professional office, including contractor's offices
7. Commercial or trade school
8. Community support services uses such as: mail order store, newspaper office, office supply, catering, laundry retail and mortuary
9. Compounding of cosmetics, toiletries, dyes and pharmaceuticals
10. Dry cleaning and/or commercial laundry establishments including dry cleaning plants and operations primarily serving satellite drop-off dry cleaning establishments in other districts
11. Engraving, printing, publishing, lithography, blue printing, film processing and photocopying establishments
12. Exterminating services
13. Furniture upholstery
14. Greenhouse, including retail and wholesale sale of plants
15. Ice sales and storage
16. Light manufacturing assembly of previously manufactured parts, fabricating, cleaning, testing, assembling, repairing and servicing
17. Overnight and weekend parking
18. Radio and television: service, repair and studios
19. Research laboratory
20. Indoor self storage facility
21. Sheet metal shop
22. Veterinarian and animal hospital
23. Antenna attachments to existing antenna towers, buildings or other structures which do not exceed the permitted height in the zoning district or the height established by special use permit
24. Accessory retail use associated with another permitted use where the floor area taken up by retail does not exceed 25%.

(B) SPECIAL USES*

No enumerated Special Use shall be considered to be an accessory use to any other permitted or Special Use, and a separate permit shall be required for each separate Special Use.

1. Animal day care
2. Cartage, express or parcel delivery
3. Church, temple or other religious institution
4. Club or lodge – private, fraternal or religious
5. Compost collection facility
6. Concrete and cast stone fabrication and molding, including monument establishments
7. Contractor's yard for storage of vehicles and materials
8. Glass products production
9. Indoor amusement

10. Indoor recreation facility
11. Kennel or cattery
12. Micro Food and Beverage Manufacturing
13. Outdoor storage
14. Private utility use or facility
15. Public use
16. Public utility and public service use
17. Recycling collection center
18. Television and radio tower, antenna support structure, water and fire tower, cooling tower, etc which exceed the maximum height
19. Vehicle storage yard
20. Warehouse
21. Wholesale merchandising and storage warehousing

*All (A) Permitted and (B) Special Uses must also comply with all applicable requirements contained in the "Supplemental District Regulations" as well as all other pertinent regulations in this Code.

(C) ACCESSORY BUILDINGS, STRUCTURES AND USES

See Section 10-5-4 "ACCESSORY STRUCTURES AND USES" and 10-5-5 "YARDS".

(D) MINIMUM YARD AND LOT REQUIREMENTS*

1.	Front or corner side yard:	30' in depth. The front 10' shall be landscaped.
2.	Rear yard:	20' in depth. The rear 10' shall be landscaped if adjacent to a residential zone or use or property located in the CR zoning district.
3.	Side yard:	20', such yard shall be landscaped if adjacent to a residential zone or use.
4.	Lot area:	20,000 sq. ft.
5.	Lot width:	100 ft.
6.	Lot depth:	200 ft.

(E) MAXIMUM HEIGHT

1. 45'

2. Churches and temples may be erected to a height not exceeding 75', if the building is set back from each yard line at least 2' for each foot of additional building height above the height limit otherwise permitted in the district;

3. **The height of a television or radio tower, antenna support structure, church spire, belfry, monument, tank, water and fire tower, stage tower or scenery loft, cooling tower, ornamental tower, and spire, chimney, elevator bulkhead, conveyor and flag pole shall be specified in the ordinance granting a special use permit.**

(F) SIGNS AND FENCES

1. **Signs as per Sign Ordinance.**

2. **Screening required pursuant to Section 10-5-13(L).**

3. **See Section 10-5-5: YARDS.**

(G) PARKING AND LOADING REQUIREMENTS

1. **All buildings except those specified below: One space for each 250 sq. ft. of floor area.**

2. **Car wash: One space for each 2 employees, plus reservoir parking space or stack space equal to 5 times the maximum capacity of the washing unit.**

3. **Club and lodge: One space for each 300 sq. ft. of gross floor area.**

4. **Commercial or trade school: Once space for each 2 students based on design capacity.**

5. **Additional off-street parking and loading requirements are found in the "Supplementary District Regulations."**

Amend Section 10-5-13 of the Supplemental Regulations to read as follows:

10-5-13: PERFORMANCE STANDARDS AND OTHER REQUIREMENTS FOR **INDUSTRIAL USES**, COMMERCIAL USES, PLANNED UNIT DEVELOPMENTS, SPECIAL USES, AND NON-RESIDENTIAL USES IN RESIDENTIAL ZONING DISTRICTS:

The following standards shall apply to **industrial uses,** commercial uses, planned unit developments, special uses (excluding single family residences) and non-residential uses in residential zoning districts. The property owner shall be responsible for submitting documentation prepared by a professional in the applicable area of expertise upon written request of the Village to verify that any standard has been satisfied.[20]

Amend the follows Sections in Chapter 7 "Planned Unit Developments" to read as follows:

10-7-2: PROVISIONS GOVERNING ALL PLANNED UNIT DEVELOPMENTS:

(A) Planned Unit Developments may be authorized as a Special Use within the R1 through R4 and C2 through C5 ~~Zoning Districts~~ **and I1 Zoning Districts**. All unimproved land, redevelopments or additions to existing structures in the C5 District shall be developed only by the Planned Unit Development procedures. Any development within the R5 and C6 Zoning Districts shall be accomplished only by Planned Unit Development procedures;

10-7-7: EVALUATION FACTORS:

The Planned Unit Development may be authorized as a Special Use, provided that it fulfills the intentions of the following factors, which shall be considered by the Plan Commission and the Village Board, among other factors, when evaluating a Special Use for Planned Unit Development:

(A) Factors Affecting the Community as a Whole, including:

1. Uses or use;

2. Intensity of use; and

3. Traffic;

4. Noise and odors;

(B) Factors Affecting the Neighborhood:

1. Heights;

2. Front, side and rear yard definitions and uses where they occur at the development periphery;

(C) Factors Affecting the Development Itself:

1. Bulk;

2. Gross residential, ~~and/or~~ commercial, **and/or industrial** building areas; . .

10-7-9: COMMERCIAL **AND INDUSTRIAL** PLANNED UNIT DEVELOPMENT STANDARDS:

(A) Allowable Uses: Within the C2 through C6 **and I1** Zoning Districts, uses within commercial, ~~and/or~~ office, **and/or industrial** planned developments may only

include any of the permitted or Special Uses allowed in the district in which the planned development is located;

(B) Arrangement of Commercial and Industrial Uses:

1. Commercial **and industrial** buildings and establishments shall be planned as groups having common parking areas and common ingress and egress points in order to reduce the number of potential accident locations at intersections with thoroughfares. Planting screens or fences shall be provided on the sides of the development abutting areas occupied or likely to be occupied by residences;

2. The plan of the project shall provide for the integrated and harmonious design of buildings, and for adequate and properly arranged facilities for internal traffic circulation, landscaping and such other features and facilities as may be necessary to make the project attractive and efficient from the standpoint of the adjoining and surrounding existing or potential development;

(C) Designated Open Areas: Except within the C5 **and I1** Zoning Districts, at least ten percent (10%) of the land area of the development designated as common open area shall be developed for open plazas, pedestrian malls, tot lots, passive or active recreational facilities, trails and other quasi-public spaces and uses with adequate arrangement, design and planting;

(D) Intensity of Use: The coverage of all principal and accessory buildings and structures shall not exceed fifty percent (50%) of the lot area, except that the percentage of coverage may be increased two percent (2%) for each ten percent (10%) of required off-street parking which is located either below grade or in a parking structure, up to a maximum lot coverage of sixty-five percent (65%).

X:\Plandev\PLANNING\CODES\ZONING CODE\Light Industrial Zoning District.doc

FRED BUCHOLZ
DUPAGE COUNTY RECORDER
NOV. 16, 2018 11:38 AM
PLAT $48.00 05-12-207-032
PLAT PAGE COUNT: 1
010 PAGES R2018-107029

FILED
NOV 16 2018
DuPage County Clerk

Village of Glen Ellyn

Ordinance No. 6631

An Ordinance Annexing
Property Located at 21W180 Hill Avenue
(Proposed Addresses: 1096 Hill Avenue and 1102 Hill Avenue) and
21W200 Hill Avenue (Proposed Addresses: 1108 Hill Avenue and 1118 Hill Avenue)
Glen Ellyn, IL 60137

Adopted by the
President and the Board of Trustees
Of the Village of Glen Ellyn
DuPage County, Illinois
This 8 Day of Oct, 2018.

Published in pamphlet form by the authority
of the President and Board of Trustees of the
Village of Glen Ellyn, DuPage County, Illinois,
this 9 day of Oct, 2018.

PREPARED BY AND MAIL TO:
VILLAGE OF GLEN ELLYN
ATTN: VILLAGE CLERK
535 DUANE STREET
GLEN ELLYN, IL 60137

Ordinance No. 6631

An Ordinance Annexing
Property Located at 21W180 Hill Avenue
(Proposed Addresses: 1096 Hill Avenue and 1102 Hill Avenue) and
21W200 Hill Avenue (Proposed Addresses: 1108 Hill Avenue and 1118 Hill Avenue)
Glen Ellyn, IL 60137

Whereas, Joseph A. Coghill, III, manager of JAC Properties GE, LLC, owner of 21W180 Hill Avenue, and G. Vincent and Barbara Cuyler, owners of 21W200 Hill Avenue, entered into annexation agreements with the Village of Glen Ellyn on September 9, 2013 pursuant to Ordinance No. 6164; and

Whereas, the owners each submitted a petition to annex the aforementioned properties to the Village of Glen Ellyn pursuant to and in accordance with Section 7-1-8 of the Illinois Municipal Code, 65 ILCS 5/7-1-8; and

Whereas, these annexation petitions, signed by the owners of record of the property hereinafter described, have been filed with the Village Clerk of the Village of Glen Ellyn, DuPage County, Illinois, copies of which are attached hereto as Exhibit "A"; and

Whereas, said properties are not within the corporate limits of any municipality but are contiguous to the Village of Glen Ellyn; and

Whereas, the properties to be annexed, commonly known as 21W180 Hill Avenue (with proposed new addresses of 1096 Hill Avenue and 1102 Hill Avenue) and 21W200 Hill Avenue (with proposed new addresses of 1108 Hill Avenue and 1118 Hill Avenue) are legally described as follows:

<u>21W180 Hill Avenue</u>

LOTS 1 AND 2 IN HILL OAK SUBDIVISION, BEING PART OF THE NORTHEAST QUARTER OF SECTION 12, TOWNSHIP 39 NORTH, RANGE 10 EAST OF THE THIRD PRINCIPAL MERIDIAN, ACCORDING TO THE PLAT THEREOF RECORDED MAY 11, 1970 AS DOCUMENT NUMBER R70-14300 AND CERTIFICATE OF CORRECTION RECORDED MAY 21, 1970 AS DOCUMENT NUMBER R70-15844 IN DUPAGE COUNTY, ILLINOIS.

P.I.N.s: 05-12-207-032 and 05-12-207-033

21W200 Hill Avenue

PARCEL 1: LOT 1 IN VILLA PARK KITCHENS RESUBDIVISION BEING PART OF THE NORTHEAST QUARTER OF SECTION 12, TOWNSHIP 39 NORTH, RANGE 10 EAST OF THE THIRD PRINCIPAL MERIDIAN, ACCORDING TO THE PLAT THEREOF RECORDED AUGUST 11, 1972 AS DOCUMENT NUMBER R72-47323, ALL IN DUPAGE COUNTY, ILLINOIS,

AND ALSO:

THAT PART OF THE UNION PACIFIC RAILROAD RIGHT-OF-WAY (FORMERLY THE CHICAGO AND NORTHWESTERN RAILROAD RIGHT OF WAY) LYING NORTH OF AND ABUTTING LOT 1 IN VILLAGE PARK KITCHENS RESUBDIVISION AFORESAID, MORE PARTICULARLY DESCRIBED AS FOLLOWS:

COMMENCING AT THE NORTHEAST CORNER OF SAID LOT 2 OF SAID VILLAGE PARK KITCHENS RESUBDIVISION AND RUNNING THENCE WESTERLY ALONG THE NORTH LINE THEREOF, A DISTANCE OF 176.18 FEET TO A POINT OF CURVE IN SAID NORTH LINE; THENCE CONTINUING WESTERLY ALONG THE NORTH LINE OF SAID LOT 2, BEING THE ARC OF A CURVE CONCAVE TO THE SOUTHEAST HAVING A RADIUS OF 3321.38 FEET, WHOSE CENTRAL ANGLE IS 01 DEGREES 16 MINUTES 48 SECONDS, A DISTANCE OF 74.20 FEET (REC. & MEAS.) TO THE NORTHEAST CORNER OF SAID LOT 1 FOR THE POINT OF BEGINNING; RUNNING THENCE WESTERLY ALONG THE NORTH LINE OF SAID LOT , BEING THE ARC OF A CURVE CONCAVE TO THE SOUTHEAST, HAVING A RADIUS OF 3321.38 FEET AND A CENTRAL ANGLE OF 02 DEGREES 04 MINUTES 19 SECONDS, AN ARC DISTANCE OF 120.10 FEET (MEAS., REC.=120.12') THENCE NORTHERLY RADIAL TO THE LAST DESCRIBED CURVE, A DISTANCE OF 12.79 FEET; THENCE EASTERLY A DISTANCE OF 69.97 FEET TO A POINT THAT IS 16.00 FEET NORTHERLY OF (MEASURED RADIALLY THERETO) THE NORTH LINE OF VILLA PARK KITCHENS RESUBDIVISION AS AFORESAID; THENCE CONTINUING EASTERLY ALONG A CURVE CONCAVE TO THE SOUTHEAST, HAVING A RADIUS OF 3,337.21 FEET (DEED, 3,337.38'=CALC.), A CENTRAL ANGLE OF 00 DEGREES 52 MINUTES 17 SECONDS, AND BEING NORMALLY PARALLEL WITH SAID NORTH LINE, AN ARC DISTANCE OF 50.75 FEET; THENCE SOUTHEASTERLY 16.00 FEET TO THE POINT OF

BEGINNING, ACCORDING TO DOCUMENT RECORDED MARCH 24, 1995, AS NUMBER R95-034450, ALL IN DUPAGE COUNTY, ILLINOIS.

P.I.N. 05-12-207-037

PARCEL 2:

LOT 2 IN VILLA PARK KITCHENS RESUBDIVISION, BEING A PART OF THE NORTHEAST QUARTER OF SECTION 12, TOWNSHIP 39 NORTH, RANGE 10 EAST OF THE THIRD PRINCIPAL MERIDIAN, ACCORDING TO THE PLAT THEREOF RECORDED AUGUST 11, 1972 AS DOCUMENT NUMBER R72-47323 IN DUPAGE COUNTY, ILLINOIS,

AND, ALSO:

THAT PART OF THE UNION PACIFIC RAILROAD RIGHT OF WAY (FORMERLY THE CHICAGO AND NORTHWESTERN RAILROAD RIGHT OF WAY) LAYING NORTH OF AND ABUTTING LOT 2 IN VILLA PARK KITCHENS RESUBDIVISION AFORESAID, MORE PARTICULARLY DESCRIBED AS FOLLOWS:

BEGINNING AT THE NORTHEAST CORNER OF SAID LOT 2 AND RUNNING THENCE WESTERLY ALONG THE NORTH LINE THEREOF, A DISTANCE OF 176.18 FEET TO A POINT OF CURVE IN SAID NORTH LINE; THENCE CONTINUING WESTERLY ALONG THE NORTH LINE OF SAID LOT 2, BEING THE ARC OF A CURVE CONCAVE TO THE SOUTHEAST HAVING A RADIUS OF 3321.38 FEET, WHOSE CENTRAL ANGLE IS 01 DEGREE 16 MINUTES 48 SECONDS, A DISTANCE OF 74.20 FEET (REC. & MEAS.) TO THE NORTHWEST CORNER OF SAID LOT 2; THENCE NORTHERLY RADIAL TO THE LAST DESCRIBED CURVE A DISTANCE OF 16.00 FEET; THENCE EASTERLY ALONG A CURVE CONCAVE TO THE SOUTHEAST, HAVING A RADIUS OF 3,337.21 FEET (DEED,3,337.38=CALC.), A CETNRAL ANGLE OF 01 DEGREE 16 MINUTES 50 SECONDS, AND BEING NORMALLY PARALLEL WITH SAID NORTH LINE, A DISTANCE OF 74.60 FEET; THENCE EASTERLY ALONG A LINE THAT IS 16.00 FEET NORTH OF AND PARALLEL WITH SAID NORTH LINE, A DISTANCE OF 176.18 FEET (DEED, 176.22'=MEAS.) TO A POINT THAT IS 16.00 FEET NORTHERLY OF, AS MEASURED AT RIGHT ANGLES TO SAID NORTH LINE, THE NORTHEAST CORNER OF LOT 2, AFORESAID; THENCE SOUTHERLY 16.00 FEET TO THE POINT OF BEGINNING, ACCORDING TO DOCUMENT RECORDED MARCH 24, 1995, AS NUMBER R95-034450, ALL IN DUPAGE COUNTY, ILLINOIS.

P.I.N: 05-12-207-038

Whereas, the properties to be annexed are identified on the Plat of Annexation, a reduced copy of which is attached hereto as Exhibit "B"; and

Whereas, legal notices regarding the intention of the Village to annex the properties have been sent to all persons and public bodies required to receive such notice by State statute; and

Whereas, all petitions, documents, and other necessary legal requirements are in full compliance with the statutes of the State of Illinois, specifically Chapter 65, Sections 5/7-1-1 and 5/7-1-2 of the Illinois Compiled Statutes; and

Whereas, it is deemed to be in the best interest of the Village of Glen Ellyn that said properties be annexed thereto.

Now, Therefore, Be It Ordained by the President and Board of Trustees of the Village of Glen Ellyn, DuPage County, Illinois, in the exercise of its home rule powers, as follows:

Section One: The findings of fact set forth hereinabove in the recitals are hereby adopted by the President and Board of Trustees of the Village of Glen Ellyn.

Section Two: Pursuant to Section 7-1-8 of the Illinois Municipal Code, 65 ILCS 5/7-1-8, the subject properties, legally described herein above, and the adjacent right-of-way are hereby annexed to the Village of Glen Ellyn, DuPage County, Illinois.

Section Three: The Village President and Village Clerk are hereby authorized to execute the Plat of Annexation for the properties, a reduced copy of which is attached hereto as Exhibit "B".

Section Four: The Village of Glen Ellyn Zoning Map shall be and is hereby amended to show the properties as incorporated within the Village limits.

Section Five: The Village Clerk shall be and is hereby authorized and directed to cause a certified copy of this Ordinance and the Plat of Annexation to be recorded in the Office of the DuPage County Recorder.

Section Six: This Ordinance shall be in full force and effect from and after its passage, approval, and publication in pamphlet form, each in the manner provided by law.

Passed by the President and Board of Trustees of the Village of Glen Ellyn, Illinois this 8 day of Oct 18.

Ayes:	☐ Diane McGinley	☒ Pete Ladesic	☒ Mark Senak
	☒ Craig Pryde	☒ Bill Enright	☒ Gary Fasules
	☒ John Kenwood		
Nays:	☐ Diane McGinley	☐ Pete Ladesic	☐ Mark Senak
	☐ Craig Pryde	☐ Bill Enright	☐ Gary Fasules
	☐ John Kenwood		
Absent:	☐ Diane McGinley	☐ Pete Ladesic	☐ Mark Senak
	☐ Craig Pryde	☐ Bill Enright	☐ Gary Fasules
	☐ John Kenwood		

Approved by the Village President of the Village of Glen Ellyn, Illinois this 8 day of Oct 2018.

Village President

Attest:

Village Clerk

AFFIX VILLAGE SEAL

(Published in pamphlet form and posted on the 9 day of Oct, 2018.)

EXHIBIT "A"

PETITION FOR ANNEXATION
VILLAGE OF GLEN ELLYN, ILLINOIS

RECEIVED
AUG 03 2018
CLEAR PAGE
PLANNING DEPARTMENT
VILLAGE OF GLEN ELLYN

TO THE GLEN ELLYN VILLAGE BOARD:

Petitioners on oath state as follows:

1. That the undersigned are the sole owners of record of all of the property described in Attachment A and commonly known as:
   21W200 Hill Avenue
   and P.I.N. **05-12-207-038** (Subject Realty).

2. That this petition is executed by all of the owner(s) of record of the Subject Realty.

3. That no electors reside on the Subject Realty or, in the alternative, at least fifty-one percent (51%) of the electors residing on the Subject Realty have executed this petition.

4. That no portion of the property is within the corporate limits of any municipality.

5. That the Subject Property is either contiguous to the Village of Glen Ellyn, will be at the time of annexation, or may be contiguous when combined with other property annexing to the Village of Glen Ellyn.

6. That the property which the Petitioners desire to have annexed to the Village of Glen Ellyn is the property that is described in Attachment A attached hereto and made a part hereof.

7. That this Petition shall be in full force and effect from and after the date hereof and until the property is annexed to the Village of Glen Ellyn in agreement with State Law.

WHEREFORE, the applicants' petition that the property be annexed by ordinance to the Village of Glen Ellyn, Illinois, is in accordance with the appropriate statutes.

The undersigned, on oath, state that the undersigned have read the foregoing Petition for Annexation, have knowledge of the allegations contained therein, and that said allegations are true and correct to the best of the Petitioners' knowledge.

Owners of Record of Subject Property:

Signature: _____
Print Name: **G. Vincent Cuyler**
Date: **August 3, 2018**

Subscribed and sworn to before me this **3** day of **August**, 20**18**

_____
NOTARY PUBLIC

Signature: _____
Print Name: **Barbara J. Cuyler**
Date: **August 3, 2018**

Subscribed and sworn to before me this **3** day of **August**, 20**18**

_____
NOTARY PUBLIC

Signature: _____
Print Name: _____
Date: _____

Subscribed and sworn to before me this _____ day of _____, 20__

_____
NOTARY PUBLIC

OFFICIAL SEAL
LOUIS B ARANDA
NOTARY PUBLIC - STATE OF ILLINOIS
MY COMMISSION EXPIRES:03/27/19

OFFICIAL SEAL
LOUIS B ARANDA
NOTARY PUBLIC - STATE OF ILLINOIS
MY COMMISSION EXPIRES:03/27/19

EXHIBIT "A"

RECEIVED
SEP 2 0 2018
PLANNING DEPARTMENT
VILLAGE OF GLEN ELLYN

PETITION FOR ANNEXATION
VILLAGE OF GLEN ELLYN, ILLINOIS

TO THE GLEN ELLYN VILLAGE BOARD:

Petitioners on oath state as follows:

1. That the undersigned are the sole owners of record of all of the property described in Attachment A and commonly known as:
   21W180 Hill Ave.
   and P.I.N. **05-12-207-032; -033** (Subject Realty).

2. That this petition is executed by all of the owner(s) of record of the Subject Realty.

3. That no electors reside on the Subject Realty or, in the alternative, at least fifty-one percent (51%) of the electors residing on the Subject Realty have executed this petition.

4. That no portion of the property is within the corporate limits of any municipality.

5. That the Subject Property is either contiguous to the Village of Glen Ellyn, will be at the time of annexation, or may be contiguous when combined with other property annexing to the Village of Glen Ellyn.

6. That the property which the Petitioners desire to have annexed to the Village of Glen Ellyn is the property that is described in Attachment A attached hereto and made a part hereof.

7. That this Petition shall be in full force and effect from and after the date hereof and until the property is annexed to the Village of Glen Ellyn in agreement with State Law.

WHEREFORE, the applicants' petition that the property be annexed by ordinance to the Village of Glen Ellyn, Illinois, is in accordance with the appropriate statutes.

The undersigned, on oath, state that the undersigned have read the foregoing Petition for Annexation, have knowledge of the allegations contained therein, and that said allegations are true and correct to the best of the Petitioners' knowledge.

Owners of Record of Subject Property:
Signature: [signature] member
Print Name: JAC Properties GE, LLC
Date: September 19, 2018

Subscribed and sworn to before me this 19th day of September, 2018
[signature]
NOTARY PUBLIC

OFFICIAL SEAL
STEVEN K NORGAARD
NOTARY PUBLIC - STATE OF ILLINOIS
MY COMMISSION EXPIRES:08/28/19

Signature: _____
Print Name: _____
Date: _____

Subscribed and sworn to before me this
_____ day of _____, 20__
_____
NOTARY PUBLIC

Signature: _____
Print Name: _____
Date: _____

Subscribed and sworn to before me this
_____ day of _____, 20__
_____
NOTARY PUBLIC

PLAT OF ANNEXATION

TO THE VILLAGE OF GLEN ELLYN, ILLINOIS

P.I.N.'s 05-12-207-032
05-12-207-033
05-12-207-037
05-12-207-038
05-12-205-007

GRAPHIC SCALE

(IN FEET)
1 inch = 50 ft.

EXHIBIT "B"

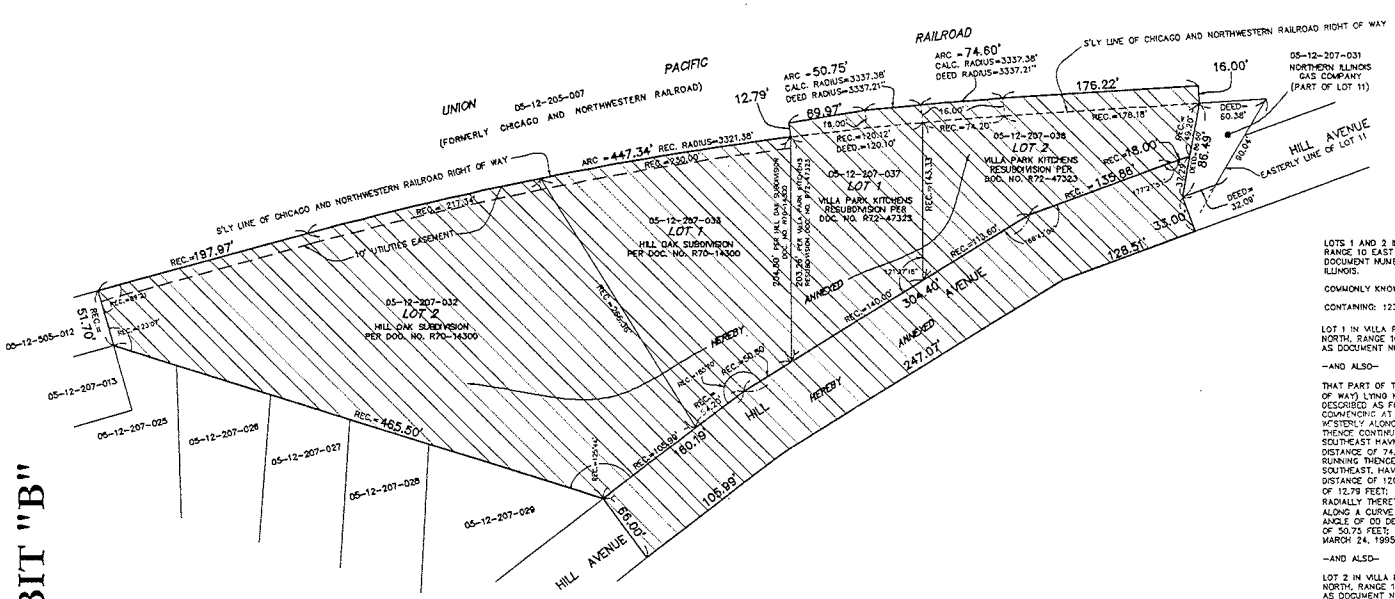

HATCHED AREA REPRESENTS CURRENT LIMITS OF THE VILLAGE OF GLEN ELLYN

HATCHED AREA REPRESENTS PROPERTY HEREBY ANNEXED TO THE VILLAGE OF GLEN ELLYN

LEGAL DESCRIPTION OF PROPERTY BEING ANNEXED

LOTS 1 AND 2 IN HILL OAK SUBDIVISION, BEING PART OF THE NORTHEAST QUARTER OF SECTION 12, TOWNSHIP 39 NORTH, RANGE 10 EAST OF THE THIRD PRINCIPAL MERIDIAN, ACCORDING TO THE PLAT THEREOF RECORDED MAY 11, 1970 AS DOCUMENT NUMBER R70-14300, AND CERTIFICATE OF CORRECTION RECORDED MAY 21, 1970-15488, IN DUPAGE COUNTY, ILLINOIS.

COMMONLY KNOWN AS: 21W180 HILL AVENUE, GLEN ELLYN, ILLINOIS

CONTAINING: 123,448.80 SQ. FT., 2.83 AC.

LOT 1 IN VILLA PARK KITCHENS RESUBDIVISION, BEING PART OF THE NORTHEAST QUARTER OF SECTION 12, TOWNSHIP 39 NORTH, RANGE 10 EAST OF THE THIRD PRINCIPAL MERIDIAN, ACCORDING TO THE PLAT THEREOF RECORDED AUGUST 11, 1972 AS DOCUMENT NUMBER R72-47323, IN DUPAGE COUNTY, ILLINOIS.

-AND ALSO-

THAT PART OF THE UNION PACIFIC RAILROAD RIGHT OF WAY (FORMERLY THE CHICAGO AND NORTHWESTERN RAILROAD RIGHT OF WAY) LYING NORTH OF AND ABUTTING LOT 1 IN VILLA PARK KITCHENS RESUBDIVISION AFORESAID, MORE PARTICULARLY DESCRIBED AS FOLLOWS:
COMMENCING AT THE NORTHEAST CORNER OF LOT 2 OF SAID VILLA PARK KITCHENS RESUBDIVISION AND RUNNING THENCE WESTERLY ALONG THE NORTH LINE THEREOF, A DISTANCE OF 176.18 FEET TO A POINT OF CURVE IN SAID NORTH LINE; THENCE CONTINUING WESTERLY ALONG THE NORTH LINE OF SAID LOT 2, BEING THE ARC OF A CURVE CONCAVE TO THE SOUTHEAST HAVING A RADIUS OF 3321.38 FEET, WHOSE CENTRAL ANGLE IS 01 DEGREE 18 MINUTES 45 SECONDS, A DISTANCE OF 74.20 FEET (REC. & MEAS.) TO THE NORTHEAST CORNER OF SAID LOT 1 FOR THE POINT OF BEGINNING; RUNNING THENCE WESTERLY ALONG THE NORTH LINE OF SAID LOT 1, BEING THE ARC OF A CURVE CONCAVE TO THE SOUTHEAST, HAVING A RADIUS OF 3321.38 FEET AND A CENTRAL ANGLE OF 02 DEGREES 04 MINUTES 19 SECONDS, AND ARC DISTANCE OF 120.10 FEET (MEAS., REC=120.12'); THENCE NORTHERLY RADIAL TO THE LAST DESCRIBED CURVE, A DISTANCE OF 12.79 FEET; THENCE EASTERLY A DISTANCE OF 69.97 FEET TO A POINT THIS IS 15.00 FEET NORTHERLY OF (MEASURED RADIALLY THERETO) THE NORTH LINE OF VILLA PARK KITCHENS RESUBDIVISION AS AFORESAID; THENCE CONTINUING EASTERLY ALONG A CURVE CONCAVE TO THE SOUTHEAST, HAVING A RADIUS OF 3,337.21 FEET (DEED, 3,337.38'=CALC.), A CENTRAL ANGLE OF 00 DEGREES 52 MINUTES 17 SECONDS, AND BEING NORMALLY PARALLEL WITH SAID NORTH LINE, AN ARC DISTANCE OF 50.75 FEET; THENCE SOUTHEASTERLY 16.00 FEET TO THE POINT OF BEGINNING, ACCORDING TO DOCUMENT RECORDED MARCH 24, 1995 AS NUMBER R95-034450, ALL IN DUPAGE COUNTY, ILLINOIS.

-AND ALSO-

LOT 2 IN VILLA PARK KITCHENS RESUBDIVISION, BEING PART OF THE NORTHEAST QUARTER OF SECTION 12, TOWNSHIP 39 NORTH, RANGE 10 EAST OF THE THIRD PRINCIPAL MERIDIAN, ACCORDING TO THE PLAT THEREOF RECORDED AUGUST 11, 1972 AS DOCUMENT NUMBER R72-47323, IN DUPAGE COUNTY, ILLINOIS.

-AND ALSO-

THAT PART OF THE UNION PACIFIC RAILROAD RIGHT OF WAY (FORMERLY THE CHICAGO AND NORTHWESTERN RAILROAD RIGHT OF WAY) LYING NORTH OF AND ABUTTING LOT 2 IN VILLA PARK KITCHENS RESUBDIVISION AFORESAID, MORE PARTICULARLY DESCRIBED AS FOLLOWS:
BEGINNING AT THE NORTHEAST CORNER OF SAID LOT 2 AND RUNNING THENCE WESTERLY ALONG THE NORTH LINE THEREOF, A DISTANCE OF 176.18 FEET TO A POINT OF CURVE IN SAID NORTH LINE; THENCE CONTINUING WESTERLY ALONG THE NORTH LINE OF SAID LOT 2, BEING THE ARC OF A CURVE CONCAVE TO THE SOUTHEAST HAVING A RADIUS OF 3321.38 FEET, WHOSE CENTRAL ANGLE IS 01 DEGREE 18 MINUTES 45 SECONDS, A DISTANCE OF 74.20 FEET (REC. & MEAS.) TO THE NORTHWEST CORNER OF SAID LOT 2; THENCE NORTHERLY RADIAL TO THE LAST DESCRIBED CURVE, A DISTANCE OF 16.00 FEET; THENCE EASTERLY ALONG A CURVE CONCAVE TO THE SOUTHEAST, HAVING A RADIUS OF 3,337.21 FEET (DEED, 3,337.38'=CALC.), A CENTRAL ANGLE OF 01 DEGREES 18 MINUTES 50 SECONDS, AND BEING NORMALLY PARALLEL WITH SAID NORTH LINE, A DISTANCE OF 74.60 FEET; THENCE EASTERLY ALONG A LINE THAT IS 16.00 FEET NORTH OF AND PARALLEL WITH SAID NORTH LINE, A DISTANCE OF 176.18 FEET (DEED, 175.22'= MEAS.) TO A POINT THAT IS 16.00 FEET NORTHERLY OF, AS MEASURED AT RIGHT ANGLES TO SAID NORTH LINE, THENCE SOUTHERLY 16.00 FEET TO THE POINT OF BEGINNING, ACCORDING TO DOCUMENT RECORDED MARCH 24, 1995 AS NUMBER R95-034450, ALL IN DUPAGE COUNTY, ILLINOIS.

COMMONLY KNOWN AS: 21W200 HILL AVENUE, GLEN ELLYN, ILLINOIS

CONTAINING: 48,141.48 SQ. FT., 1.11 AC.

-AND ALSO-

THAT PART OF THE 66.00 FOOT WIDE RIGHT OF WAY OF HILL AVENUE LYING SOUTH OF AND ABUTTING THE AFORESAID LOTS 1 AND 2 IN HILL OAK SUBDIVISION AND THE AFORESAID LOTS 1 AND 2 IN VILLA PARK KITCHENS RESUBDIVISION, THE MOST NORTHEASTERLY PORTION OF SAID RIGHT OF WAY BEING DELINEATED BY THE SOUTHWESTERLY PROLONGATION OF THE EASTERLY PROPERTY LINE OF SAID LOT 2 IN VILLA PARK KITCHENS RESUBDIVISION, 37.29 FEET TO THE CENTER LINE OF SAID HILL AVENUE RIGHT OF WAY, THENCE SOUTHERLY (AT RIGHT ANGLES TO THE NORTH LINE OF SAID RIGHT OF WAY), 33.00 FEET TO THE SOUTH LINE THEREOF.

CONTAINING: 39,251.83 SQ. FT., 0.90 AC.

TOTAL AREA BEING ANNEXED: 210,842.11 SQ. FT., 4.84 AC.

VILLAGE PRESIDENT

STATE OF ILLINOIS
COUNTY OF DuPAGE } S.S.

APPROVED BY THE PRESIDENT AND BOARD OF TRUSTEES OF THE VILLAGE OF GLEN ELLYN, DUPAGE COUNTY, ILLINOIS.

THIS _____ DAY OF _____ A.D. 20_____.

SIGNED: _____
VILLAGE PRESIDENT

ATTEST: _____
VILLAGE CLERK

VILLAGE CLERK

STATE OF ILLINOIS
COUNTY OF DuPAGE } S.S.

THIS IS TO CERTIFY THAT THE PLAT OF DEDICATION WAS PRESENTED TO AND BY ORDINANCE DULY APPROVED BY THE GLEN ELLYN VILLAGE BOARD AT THE MEETING HELD ON _____ A.D. 20____.

_____
VILLAGE CLERK

COUNTY RECORDER

STATE OF ILLINOIS
COUNTY OF DuPAGE } S.S.

THIS INSTRUMENT NUMBER _____ WAS FILED FOR RECORD IN THE RECORDER'S OFFICE OF DuPAGE COUNTY, ILLINOIS, AFORESAID, ON THE _____ DAY OF _____, A.D. 20_____ AT _____ O'CLOCK _____M.

_____
DuPAGE COUNTY RECORDER OF DEEDS

SURVEYOR

STATE OF ILLINOIS
COUNTY OF DuPAGE } S.S.

WE, GENTILE AND ASSOCIATES, INC. HEREBY CERTIFY THAT THIS PLAT HAS BEEN PREPARED AT AND UNDER MY DIRECTION (FROM AVAILABLE RECORDS), OF THE PROPERTY DESCRIBED FOR THE PURPOSE OF ANNEXATION TO THE VILLAGE OF GLEN ELLYN, ILLINOIS.

_____ A.D. 20_____

BY : _____
ILLINOIS PROFESSIONAL LAND SURVEYOR NO. 2925
MY LICENSE EXPIRES NOVEMBER 30, 2018

GENTILE & ASSOCIATES, INC.
PROFESSIONAL LAND SURVEYORS
550 E. ST. CHARLES PLACE
LOMBARD, ILLINOIS 60148
PHONE (630) 916-8262

PREPARED FOR: VILLAGE OF GLEN ELLYN
DRAWN BY: VAF
ORDER NO.: 18-20959
ILLINOIS PROFESSIONAL DESIGN FIRM LICENSE NO. 184.002870

ORDERED BY: VILLAGE OF GLEN ELLYN
535 DUANE ST.
GLEN ELLYN, ILLINOIS 60137

RETURN TO: VILLAGE OF GLEN ELLYN
535 DUANE ST.
GLEN ELLYN, ILLINOIS 60137

CERTIFICATION

I, John Chereskin, duly elected Village Clerk of the Village of Glen Ellyn, Illinois, do hereby certify that the attached is a true and correct copy of Ordinance No. 6631, passed by the Board of Trustees of the Village of Glen Ellyn, Illinois, at the Regular Meeting of said Board held on the 8 day of October 2018, and that the same was signed and approved by the President of said Village on the 8 day of October 2018.

I do further certify that the original, of which the attached is a true and correct copy, is entrusted to me as Village Clerk of said Village for safekeeping and that I am the lawful custodian and keeper of the same.

IN WITNESS WHEREOF, I have hereunto set my hand and affixed the corporate seal of the Village of Glen Ellyn, Illinois, this 8 day of October, 2018.

John C Chereskin
Village Clerk

CORPORATE SEAL

FRED BUCHOLZ
DUPAGE COUNTY RECORDER
NOV. 16, 2018 11:38 AM
OTHER $42.00 05-12-207-032

016 PAGES R2018-107030

Village of Glen Ellyn

Ordinance No. 6632

An Ordinance Approving
A Zoning Map Amendment for
1096 Hill Avenue, 1102 Hill Avenue,
1108 Hill Avenue and 1118 Hill Avenue
Glen Ellyn, Illinois 60137

Adopted by the
President and the Board of Trustees
Of the Village of Glen Ellyn
DuPage County, Illinois
This 8 Day of Oct, 2018.

Published in pamphlet form by the authority
of the President and Board of Trustees of the
Village of Glen Ellyn, DuPage County, Illinois,
this 9 day of Oct, 2018.

PREPARED BY AND MAIL TO:
(VILLAGE OF GLEN ELLYN)
ATTN: VILLAGE CLERK
535 DUANE STREET
GLEN ELLYN, IL 60137

Ordinance No. 6632

An Ordinance Approving
A Zoning Map Amendment for
1096 Hill Avenue, 1102 Hill Avenue,
1108 Hill Avenue and 1118 Hill Avenue
Glen Ellyn, Illinois 60137

Whereas, Joseph A. Coghill, III, manager of JAC Properties GE, LLC, owner of 1096 Hill Avenue and 1102 Hill Avenue, and G. Vincent and Barbara Cuyler, owners of 1108 Hill Avenue and 1118 Hill Avenue, have petitioned the Village President and Board of Trustees for approval of a Zoning Map Amendment in accordance with Section 10-10-13 of the Glen Ellyn Zoning Code to rezone the subject properties to I1 Industrial District; and

Whereas, the subject properties are located on the north side of Hill Avenue between I-355 and Walnut Road; and

Whereas, the subject properties are legally described as follows:

1096 Hill Avenue and 1102 Hill Avenue

LOTS 1 AND 2 IN HILL OAK SUBDIVISION, BEING PART OF THE NORTHEAST QUARTER OF SECTION 12, TOWNSHIP 39 NORTH, RANGE 10 EAST OF THE THIRD PRINCIPAL MERIDIAN, ACCORDING TO THE PLAT THEREOF RECORDED MAY 11, 1970 AS DOCUMENT NUMBER R70-14300 AND CERTIFICATE OF CORRECTION RECORDED MAY 21, 1970 AS DOCUMENT NUMBER R70-15844 IN DUPAGE COUNTY, ILLINOIS.

P.I.N.s: 05-12-207-032 and 05-12-207-033

1108 Hill Avenue

LOT 1 IN VILLA PARK KITCHENS RESUBDIVISION BEING PART OF THE NORTHEAST QUARTER OF SECTION 12, TOWNSHIP 39 NORTH, RANGE 10 EAST OF THE THIRD PRINCIPAL MERIDIAN, ACCORDING TO THE PLAT THEREOF RECORDED AUGUST 11, 1972 AS DOCUMENT NUMBER R72-47323, ALL IN DUPAGE COUNTY, ILLINOIS,

AND ALSO:

THAT PART OF THE UNION PACIFIC RAILROAD RIGHT-OF-WAY (FORMERLY THE CHICAGO AND NORTHWESTERN RAILROAD RIGHT OF WAY) LYING NORTH OF AND ABUTTING LOT 1 IN VILLAGE PARK KITCHENS RESUBDIVISION AFORESAID, MORE PARTICULARLY DESCRIBED AS FOLLOWS:

COMMENCING AT THE NORTHEAST CORNER OF SAID LOT 2 OF SAID VILLAGE PARK KITCHENS RESUBDIVISION AND RUNNING THENCE WESTERLY ALONG THE NORTH LINE THEREOF, A DISTANCE OF 176.18 FEET TO A POINT OF CURVE IN SAID NORTH LINE; THENCE CONTINUING WESTERLY ALONG THE NORTH LINE OF SAID LOT 2, BEING THE ARC OF A CURVE CONCAVE TO THE SOUTHEAST HAVING A RADIUS OF 3321.38 FEET, WHOSE CENTRAL ANGLE IS 01 DEGREES 16 MINUTES 48 SECONDS, A DISTANCE OF 74.20 FEET (REC. & MEAS.) TO THE NORTHEAST CORNER OF SAID LOT 1 FOR THE POINT OF BEGINNING; RUNNING THENCE WESTERLY ALONG THE NORTH LINE OF SAID LOT , BEING THE ARC OF A CURVE CONCAVE TO THE SOUTHEAST, HAVING A RADIUS OF 3321.38 FEET AND A CENTRAL ANGLE OF 02 DEGREES 04 MINUTES 19 SECONDS, AN ARC DISTANCE OF 120.10 FEET (MEAS., REC.=120.12') THENCE NORTHERLY RADIAL TO THE LAST DESCRIBED CURVE, A DISTANCE OF 12.79 FEET; THENCE EASTERLY A DISTANCE OF 69.97 FEET TO A POINT THAT IS 16.00 FEET NORTHERLY OF (MEASURED RADIALLY THERETO) THE NORTH LINE OF VILLA PARK KITCHENS RESUBDIVISION AS AFORESAID; THENCE CONTINUING EASTERLY ALONG A CURVE CONCAVE TO THE SOUTHEAST, HAVING A RADIUS OF 3,337.21 FEET (DEED, 3,337.38'=CALC.), A CENTRAL ANGLE OF 00 DEGREES 52 MINUTES 17 SECONDS, AND BEING NORMALLY PARALLEL WITH SAID NORTH LINE, AN ARC DISTANCE OF 50.75 FEET; THENCE SOUTHEASTERLY 16.00 FEET TO THE POINT OF BEGINNING, ACCORDING TO DOCUMENT RECORDED MARCH 24, 1995, AS NUMBER R95-034450, ALL IN DUPAGE COUNTY, ILLINOIS.

P.I.N. 05-12-207-037

1118 Hill Avenue

LOT 2 IN VILLA PARK KITCHENS RESUBDIVISION, BEING A PART OF THE NORTHEAST QUARTER OF SECTION 12, TOWNSHIP 39 NORTH, RANGE 10 EAST OF THE THIRD PRINCIPAL MERIDIAN, ACCORDING TO THE PLAT THEREOF RECORDED AUGUST 11, 1972 AS DOCUMENT NUMBER R72-47323 IN DUPAGE COUNTY, ILLINOIS,

AND, ALSO:

THAT PART OF THE UNION PACIFIC RAILROAD RIGHT OF WAY (FORMERLY THE CHICAGO AND NORTHWESTERN RAILROAD RIGHT OF WAY) LAYING NORTH OF AND ABUTTING LOT 2 IN VILLA PARK KITCHENS RESUBDIVISION AFORESAID, MORE PARTICULARLY DESCRIBED AS FOLLOWS:

BEGINNING AT THE NORTHEAST CORNER OF SAID LOT 2 AND RUNNING THENCE WESTERLY ALONG THE NORTH LINE THEREOF, A DISTANCE OF 176.18

CONCAVE TO THE SOUTHEAST HAVING A RADIUS OF 3321.38 FEET, WHOSE CENTRAL ANGLE IS 01 DEGREE 16 MINUTES 48 SECONDS, A DISTANCE OF 74.20 FEET (REC. & MEAS.) TO THE NORTHWEST CORNER OF SAID LOT 2; THENCE NORTHERLY RADIAL TO THE LAST DESCRIBED CURVE A DISTANCE OF 16.00 FEET; THENCE EASTERLY ALONG A CURVE CONCAVE TO THE SOUTHEAST, HAVING A RADIUS OF 3,337.21 FEET (DEED,3,337.38=CALC.), A CETNRAL ANGLE OF 01 DEGREE 16 MINUTES 50 SECONDS, AND BEING NORMALLY PARALLEL WITH SAID NORTH LINE, A DISTANCE OF 74.60 FEET; THENCE EASTERLY ALONG A LINE THAT IS 16.00 FEET NORTH OF AND PARALLEL WITH SAID NORTH LINE, A DISTANCE OF 176.18 FEET (DEED, 176.22'=MEAS.) TO A POINT THAT IS 16.00 FEET NORTHERLY OF, AS MEASURED AT RIGHT ANGLES TO SAID NORTH LINE, THE NORTHEAST CORNER OF LOT 2, AFORESAID; THENCE SOUTHERLY 16.00 FEET TO THE POINT OF BEGINNING, ACCORDING TO DOCUMENT RECORDED MARCH 24, 1995, AS NUMBER R95-034450, ALL IN DUPAGE COUNTY, ILLINOIS.

P.I.N: 05-12-207-038

Whereas, the petitioners heretofore each entered into a valid and binding annexation agreement for the subject properties, and said annexation agreements were approved by the President and Board of Trustees pursuant to Ordinance No. 6164 on September 9, 2013; and

Whereas, the annexation agreements required the Village to create a new light industrial zoning district for the subject properties to be zoned upon annexation; and

Whereas, the Village created a new light industrial zoning district on January 13, 2014 pursuant to Ordinance 6207; and

Whereas, the Properties have been annexed by the Village Board by Ordinance No. 6631 on October 8, 2018; and

Whereas, following due and proper publication of notice in The Daily Herald not less than fifteen (15) nor more than thirty (30) days prior thereto, the Plan Commission of the Village of Glen Ellyn conducted a public hearing on September 13, 2018 at which hearing the Plan Commission considered the petitioners' request for a Zoning Map Amendment to I1 Industrial; and

Whereas, at the September 13, 2018 public hearing of the Plan Commission, the petitioners presented evidence, testimony, and exhibits in support of the request and no one spoke in favor of

Whereas, at the September 13, 2018 public hearing of the Plan Commission, the petitioners presented evidence, testimony, and exhibits in support of the request and no one spoke in favor of or in opposition to the request and one (1) person asked general questions about the request for a Zoning Map Amendment to I1 Industrial; and

Whereas, after having considered the evidence presented, including the exhibits and materials submitted, the Plan Commission made its findings of fact and recommendations and by a vote of six (6) "yes" and zero (0) "no", the Plan Commission recommended approval of the request for a Zoning Map Amendment to I1 Industrial as set forth in the September 13, 2018 minutes of the Plan Commission, a draft of which is attached hereto as Exhibit "A"; and

Whereas, the Village President and Board of Trustees have reviewed the evidence, exhibits, and materials presented at the September 13, 2018 Plan Commission public hearing and have considered the recommendations of the Plan Commission; and

Whereas, the President and Board of Trustees hereby make the following findings of fact in regard to the request for a Zoning Map Amendment to I1 Industrial for the properties:

1. The existing uses within the general area of the subject properties consist of industrial to the south, the Union Pacific Railroad, residential, and the Churchill Woods Forest Preserve to the north, residential to the west and the Glenbard Wastewater Authority plant to the east.

2. The zoning classification to the south is I-1 Industrial in unincorporated DuPage County, Conservation Recreation to the north in Glen Ellyn and R-4 Residential in Unincorporated DuPage County, R-4 Residential to the west in Unincorporated DuPage County, and Conservation Recreation to the east in the Village of Lombard.

3. The subject properties are suitable for the I1 Industrial District. These properties have been in use as industrial for many years and were previously zoned as industrial when located within the Village of Lombard.

4. The property immediately to the south is zoned and used for industrial purposes in unincorporated DuPage County. The property to the east is industrial in nature as the Glenbard Wastewater Authority plant. The Union Pacific railroad is adjacent to the north.

5. The Comprehensive Plan designates these properties for light industrial and recommends the area be improved and upgraded as a limited self-contained business area.

6. The properties are not vacant and have been improved with industrial uses for several years. The use of the properties will remain as industrial with the new zoning classification.

7. The properties will not be diminished based on the particular zoning restrictions. When the Village adopted a new I1 Industrial zoning district, the existing uses and conditions on the properties were taken into account as well as the industrial provisions contained in the Village of Lombard and DuPage County's zoning codes.

Whereas, based on the aforementioned findings of fact, the President and Board of Trustees have determined that granting the requested Zoning Map Amendment is consistent with the goals of the Glen Ellyn Comprehensive Plan and the Glen Ellyn Zoning Code and find it to be in the best interest of the Village to approve the request for a Zoning Map Amendment to I1 Industrial.

Now, Therefore, be it Ordained by the President and Board of Trustees of the Village of Glen Ellyn, DuPage County, Illinois, in the exercise of its home rule powers, as follows:

Section One: The draft minutes from the September 13, 2018 Plan Commission public hearing, attached hereto as Exhibit "A", and the findings of fact therein, as well as in the preambles above, are hereby adopted as the findings of fact of the Village President and Board of Trustees based upon their review of the evidence, exhibits, and materials presented at the September 13, 2018 public hearing of the Plan Commission.

Section Two: Based upon the findings of fact and recommendation of the Plan Commission, as adopted herein, and the findings of fact and conclusions set forth in the preambles above, the Village President and Board of Trustees hereby approve the request for a Zoning Map Amendment to I1 Industrial for the properties located at 1096 Hill Avenue, 1102 Hill Avenue, 1108 Hill Avenue, and 1118 Hill Avenue.

Section Three: The Village Clerk is hereby authorized and directed to cause a copy of this Ordinance approving the request for a Zoning Map Amendment to I1 Industrial to be recorded with the DuPage County Recorder of Deeds.

Section Four: The Director of the Planning and Development Department shall cause the Zoning District Map of the Village of Glen Ellyn to be amended to place the Properties in the I1 Industrial District. A map indicating the location of the properties is attached hereto and identified as Exhibit "B".

Section Five: This Ordinance shall be in full force and effect from and after the passage, approval, and publication in pamphlet form.

Passed by the President and Board of Trustees of the Village of Glen Ellyn, Illinois this 8 day of Oct 2018.

Ayes:	☐ Diane McGinley	☑ Pete Ladesic	☑ Mark Senak
	☑ Craig Pryde	☑ Bill Enright	☑ Gary Fasules
	☑ John Kenwood		
Nays:	☐ Diane McGinley	☐ Pete Ladesic	☐ Mark Senak
	☐ Craig Pryde	☐ Bill Enright	☐ Gary Fasules
	☐ John Kenwood		
Absent:	☐ Diane McGinley	☐ Pete Ladesic	☐ Mark Senak
	☐ Craig Pryde	☐ Bill Enright	☐ Gary Fasules
	☐ John Kenwood		

Approved by the Village President of the Village of Glen Ellyn, Illinois this 8 day of Oct 2018.

Diane McGinley

Village President

Attest:

Village Clerk

AFFIX VILLAGE SEAL

(Published in pamphlet form and posted on the 9 day of OCT, 2018.)

EXHIBIT "A"

DRAFT MINUTES
REGULAR PLAN COMMISSION MEETING
SEPTEMBER 13, 2018

Call to Order

The regular meeting of the Plan Commission was called to order by Chairperson Mary Loch at 7:00 p.m. Plan Commissioners Angela Fanella, Phillip Hartweg, David Rodemann, Mohammed Saeed and Jamie Vondruska were present. Plan Commissioners Tracy Heming-Littwin, John Mulherin and Bob Vavra were excused. Also present were Village Planner John Sterrett, Recording Secretary Debbie Solomon and Village Trustee Craig Pryde.

A quorum was present.

Public Comment

No general comments on non-agenda items were made by the public at this Plan Commission meeting.

Approval of Plan Commission Draft Minutes

1. Commissioner Vondruska, seconded by Commissioner Rodemann, to approve the minutes of the June 14, 2018 Plan Commission meeting. The motion carried with six (6) yes votes as follows: Plan Commissioners Fanella, Hartweg, Rodemann, Saeed, Vondruska and Chairperson Loch voted "yes."

2. Commissioner Fanella, seconded by Commissioner Vondruska, to approve the minutes of the August 9, 2018 Plan Commission meeting. The motion carried with six (6) yes votes as follows: Plan Commissioners Fanella, Hartweg, Rodemann, Saeed, Vondruska and Chairperson Loch voted "yes."

Public Hearing – 21W180 Hill Avenue and 21W200 Hill Avenue - Zoning Map Amendment to I1 Light Industrial

On the agenda was a public hearing to consider the application for a Zoning Map Amendment for 21W180 Hill Avenue and 21W200 Hill Avenue.

PUBLIC HEARING – 21W180 HILL AVENUE AND 21W200 HILL AVENUE - ZONING MAP AMENDMENT TO I1 LIGHT INDUSTRIAL

PUBLIC HEARING WITH DISCUSSION, CONSIDERATION, AND RECOMMENDATION REGARDING A REQUEST FOR APPROVAL OF A ZONING MAP AMENDMENT TO I1 LIGHT INDUSTRIAL FOR THE PROPERTIES AT 21W180 HILL AVENUE AND 21W200 HILL AVENUE.

Commissioner Fanella, seconded by Commissioner Vondruska, to open the public hearing at 7:01 p.m. The motion carried unanimously by voice vote.

Staff Introduction

Village Planner Sterrett was sworn in and showed an overview map of the properties. Village Planner Sterrett stated the subject properties are located on the north side of Hill Avenue, west of I-355 and east of Walnut Road. Village Planner Sterrett stated the properties are currently in unincorporated DuPage County zoned as R-4 Single Family Residential and are proposed to be annexed into the Village. Village Planner Sterrett stated the surrounding zoning and land use are CR Conservation Recreation to the north and east, I1 Light Industrial to the south and R4 Single Family Residential to the west.

Village Planner Sterrett stated notice of the public hearing was published in the August 10, 2018 edition of the Daily Herald. Village Planner Sterrett stated property owners within 250 feet of the subject properties were notified by mail of the public hearing and a placard was placed on each of the properties.

Village Planner Sterrett stated the petitioners are G. Vincent and Barbara Cuyler, owners of 21W200 Hill Avenue, and West Suburban Bank Land Trust No. 3344 by Noorlag Real Estate Group, LLC by Lynea R. Herlien, Manager, Noorlag Real Estate Group, LLC, owner of 21W180 Hill Avenue.

Village Planner Sterrett stated the properties were previously within the Village of Lombard until 2009 when Lombard approved a disconnection of the properties. Village Planner Sterrett stated since that time, the properties remain outside the corporate limits of any municipality. Village Planner Sterrett stated on September 9, 2013 the Village Board approved annexation agreements for each of the properties. Village Planner Sterrett stated each agreement contains stipulation that the Village Board must approve a text amendment to the Village Zoning Code to create a light industrial zoning district within six (6) months of the execution of the Annexation Agreements, or they would be deemed null and void. Village Planner Sterrett stated each agreement also states that the properties will be zoned to this Light Industrial district upon annexation.

Village Planner Sterrett stated the Plan Commission met on December 12, 2013 to hold a public hearing on the Zoning Text Amendment for the creation of a light industrial zoning district. Village Planner Sterrett stated the proposed I1 district was created specifically to accommodate the subject properties. Village Planner Sterrett stated following the Public Hearing the I1 Light Industrial Zoning District was adopted by the Village Board on January 13, 2014.

Village Planner Sterrett stated the annexation agreements stipulate that once the properties become contiguous to the Village, the owners are required to submit a petition for annexation upon notice by the Village. Village Planner Sterrett stated a portion of the Churchill Woods property to the north was annexed by the Village in June of 2018 and created contiguity with the subject properties. Village Planner Sterrett stated the petitioners have each submitted a petition for annexation. Village Planner Sterrett stated prior to the Village Board taking action on annexing the properties, the petitioners are seeking a Zoning Map Amendment to zone the properties I1 immediately after annexation, which was the intent of annexing those properties. Village Planner Sterrett stated before the Village Board takes action on the Annexation and Zoning Map Amendment, the Plan Commission is being asked to conduct a Public Hearing for the Zoning Map Amendment.

Petitioner's Presentation

There was no presentation from the Petitioner.

Questions from the Plan Commission

There were no questions from the Plan Commissioners

Persons in Favor of or in Opposition to the Request

Jeffrey Svien, who resides at 14 Walnut Road, stated he is in unincorporated Glen Ellyn and is an interested party in this. Mr. Svien stated Walnut Road is now surrounded by annexed properties and asked when Walnut Road might be annexed into the Village. Chairperson Loch stated the Plan Commission does not handle this so Mr. Svien would need to talk to the Village Board and the Glen Ellyn Planning and Development Department about this.

Mr. Svien stated there are cars parked along Walnut Road often and asked if the parking would be lessened once there are be different ordinances after the annexation. Village Planner Sterrett stated this is maintained by the Village of Lombard currently, and once the properties are annexed into Glen Ellyn, the Village's parking requirements would apply. Village Planner Sterrett stated once these properties are annexed, the existing uses, the condition of the

properties and the building setbacks are considered non-conforming; however, any other laws or nuisance ordinances would now apply.

Commissioner Fanella moved, seconded by Commissioner Vondruska, to close the public hearing at 7:08 p.m. The motion carried unanimously by voice vote.

Comments from the Plan Commission

Commissioner Vondruska stated he has no issues with this as it seems straight forward. The other Plan Commissioners agreed with this.

Motion
Commissioner Fanella moved, seconded by Commissioner Vondruska to recommend the following:

After conducting a public hearing and deliberating on the appropriate zoning classification to apply to the properties at 21W180 Hill Avenue, owned by West Suburban Bank Land Trust No. 3344 by Noorlag Real Estate Group, LLC by Lynea R. Herlien, Manager, Noorlag Real Estate Group, LLC and 21W200 Hill Avenue, owned by G. Vincent and Barbara Cuyler, the Plan Commission hereby recommends I1 Industrial zoning of the properties in accordance with Section 10-10-13 of the Zoning Code based on the following findings of fact:

1. The existing uses within the general area of the subject properties consist of industrial to the south, the Union Pacific Railroad, residential, and the Churchill Woods Forest Preserve to the north, residential to the west and the Glenbard Wastewater Authority plant to the east.

2. The zoning classification to the south is I-1 Industrial in unincorporated DuPage County, Conservation Recreation to the north in Glen Ellyn and R-4 Residential in Unincorporated DuPage County, R-4 Residential to the west in Unincorporated DuPage County, and Conservation Recreation to the east in the Village of Lombard.

3. The subject properties are suitable for the I1 Industrial District. These properties have been in use as industrial for many years and were previously zoned as industrial when located within the Village of Lombard.

4. The property immediately to the south is zoned and used for industrial purposes in unincorporated DuPage County. The property to the east is industrial in nature as the Glenbard Wastewater Authority plant. The Union Pacific railroad is adjacent to the north.

5. The Comprehensive Plan designates these properties for light industrial and recommends the area be improved and upgraded as a limited self-contained business area.

6. The properties are not vacant and have been improved with industrial uses for several years. The use of the properties will remain as industrial with the new zoning classification.

7. The properties will not be diminished based on the particular zoning restrictions. When the Village adopted a new I1 Industrial zoning district, the existing uses and conditions on the properties were taken into account as well as the industrial provisions contained in the Village of Lombard and DuPage County's zoning codes.

The motion carried with six (6) yes votes and zero no votes as follows: Plan Commissioners Fanella, Vondruska, Hartweg, Rodemann, Saeed and Chairperson Loch voted "yes."

Trustee's Report

Village Trustee Pryde stated the Village Board did the First Reading of the 1.5% food and beverage tax which there are no major objections to. Village Trustee Pryde stated the majority of the Village Board is in favor of this tax which will go toward future Capital Projects, such as the Central Business District Streetscape, a Parking Garage, HVAC improvements at the Civic Center, improvements on Roosevelt Road and a possible update at the Train Station with a Pedestrian Underpass.

Chairperson's Report

None

Staff Report

Village Planner Sterrett stated in October or November, the Plan Commission will consider an application for the former Giesche property. Village Planner Sterrett stated there will also be the first public meeting regarding an update to the Village's Comprehensive Plan. Village Planner Sterrett stated the goal is to have the Comprehensive Plan updated by March 2019.

Other Business

None

Adjournment

Commissioner Hartweg moved, seconded by Commissioner Fanella, to adjourn the meeting at 7:14 p.m. The motion carried unanimously by voice vote.

Respectfully Submitted,

Debbie Solomon
Recording Secretary

EXHIBIT "B"

Map of 1096 Hill Avenue, 1102 Hill Avenue, 1108 Hill Avenue and 1118 Hill Avenue

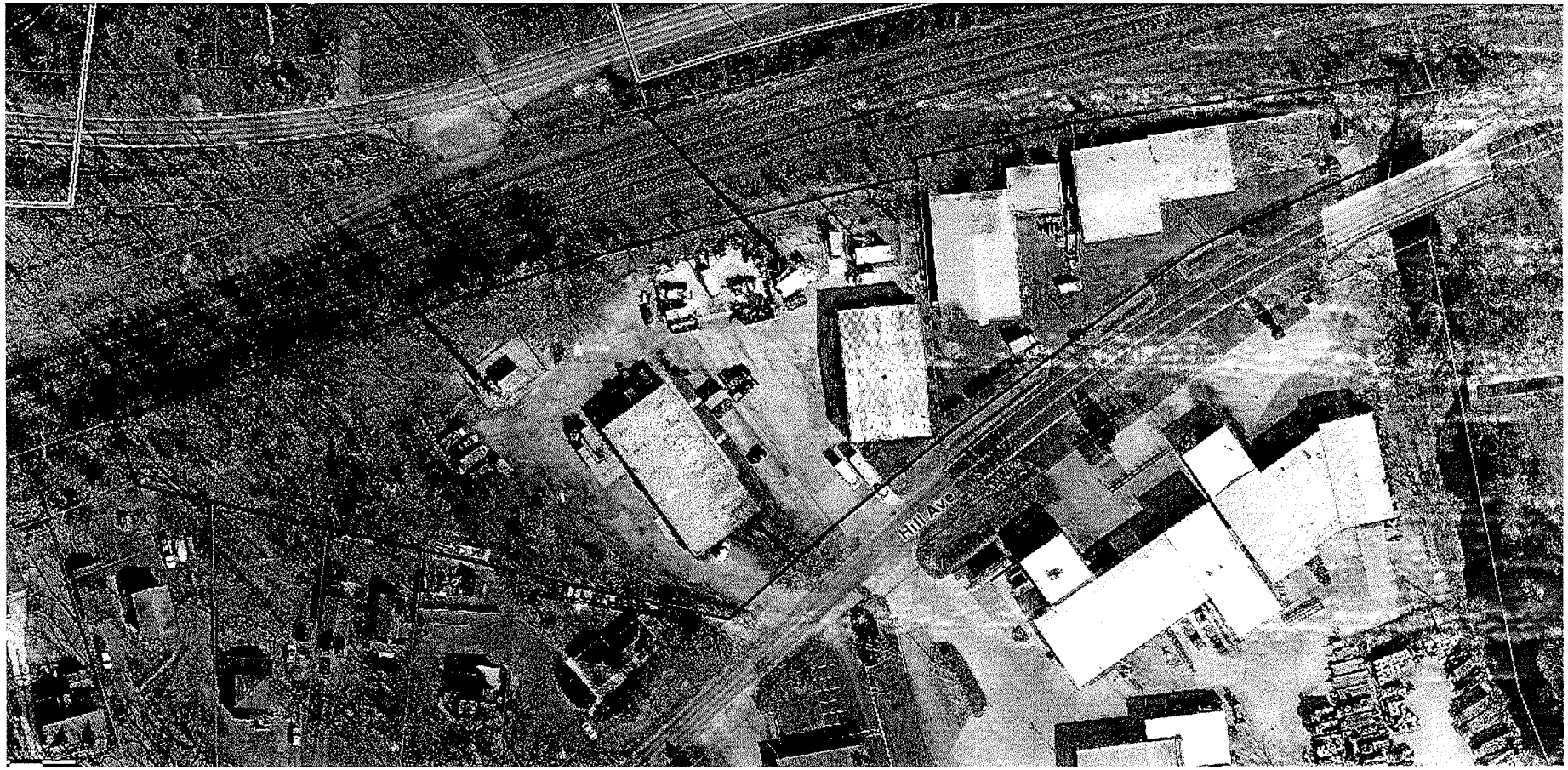

CERTIFICATION

I, John Chereskin, duly elected Village Clerk of the Village of Glen Ellyn, Illinois, do hereby certify that the attached is a true and correct copy of Ordinance No. 6632, passed by the Board of Trustees of the Village of Glen Ellyn, Illinois, at the Regular Meeting of said Board held on the 8 day of October 2018, and that the same was signed and approved by the President of said Village on the 8 day of October 2018.

I do further certify that the original, of which the attached is a true and correct copy, is entrusted to me as Village Clerk of said Village for safekeeping and that I am the lawful custodian and keeper of the same.

IN WITNESS WHEREOF, I have hereunto set my hand and affixed the corporate seal of the Village of Glen Ellyn, Illinois, this 8 day of October, 2018.

Village Clerk

CORPORATE SEAL

DRAFT MINUTES
REGULAR PLAN COMMISSION MEETING
December 8, 2022

Call to Order and Roll Call

Chairman Tim Loftus called the meeting to order at 7:00 p.m., and explained the Plan Commission's advisory function and operating procedure relative to its deliberation. He went over protocol for public comment, announced that the meeting would be recorded, and introduced Village Board Trustee Liaison Steve Thompson, Director of Community Development Marty Scott, Associate Planner Taylor Gendel, Senior Planner Atrian Fard and Recording Secretary Barbara Dutton-Thomas. Roll was called. Chairperson Loftus, Plan Commissioners Arango, Brown, Cooper, Dawson, Kreuzer, Saeed and Thakkar announced their presence, while Commissioner Wyant joined the meeting later.

Public Comment Non-Agenda Items

None.

Approval of Minutes

Commissioner Kreuzer moved to approve the draft minutes of the November 10, 2022 Plan Commission meeting; seconded by Commissioner Saeed, the motion passed by voice vote.

Commissioner Cooper moved to open the Public Hearing to consider a Special Use Permit (SUP) to allow an addition of DISH Wireless antennas and support equipment to existing cellular tower. Seconded by Commissioner Dawson, the motion passed by voice vote.

Public Hearing – 1102 Hill Avenue

Staff Introduction

Sworn in, Taylor Gendel, Associate Planner, 535 Duane, stated that the Petitioners, Crown Castle and DISH Wireless, represented by Tony Phillips of Fullerton Engineering, as licensee of a portion of the property located at 1102 Hill Avenue request approval of a SUP to allow an addition of DISH Wireless antennas and support equipment to the existing cell tower. The subject structure is located on the north side of Hill Avenue between Route 53 and Walnut Road in the I1 Light Industrial District, explained Associate Planner Gendel, who noted that the surrounding zoning and land uses are CR Conservation Recreation, Union Pacific Railroad and R-4 Unincorporated (DuPage), and Light Industrial. Ms. Gendel reviewed annexation/zoning history of the subject property, noting that the current cellular tower is height is 70 ft., which exceeds the maximum allowable height of 45 feet for structures located in the I1 Light Industrial District. As no Special Use Permit has been granted by the Village, she explained, the cellular tower is considered legal nonconforming. At this time, continued Associate Planner Gendel, the Petitioners are proposing to replace the existing vacant carrier antennas and associated equipment on the existing cellular tower with new DISH Wireless entry port, antenna and ground equipment.

The new antenna will be installed on top of the pole at approximately 67-ft. high, she said, adding that television and radio towers and antenna support structures that exceed district's maximum height will require a SUP. Given the maximum allowable height of 45 f.t in the I1 District, the proposed antenna will require approval of a SUP, she explained, adding that Code also specifies that the "lawfully existing, nonconforming use of part or all of a building or structure, all or substantially all of which building or structure is designed or intended for a use permitted in the district in which it is located, may be continued" subject to the provision stating the "nonconforming use of part of a building or structure shall not be expanded or extended." Given the legally nonconforming height and operation of the existing tower, she said, the proposed work and expansion triggers a need for a SUP. Ms. Gendel stated that the proposed addition of new DISH Wireless antennas will not add to the height of the existing structure, will be unmanned and will only require power and fiber connections that already exist on the site, and will require service by a technician approximately once a month. She listed Commission action.

Commissioner Questions

Chairperson Loftus asked what the Petitioner is broadcasting over the equipment; Ms. Gendel deferred to the Petitioner. Commissioner Brown asked if the tower is servicing any users; Ms. Gendel thought not.

Petitioner's Presentation

Sworn in, Ariel Stouder, Fullerton Engineering, 3648 W. Belle Plaine Ave., Chicago, Ill., stated that there are no carriers up there and that any equipment will be dismantled and replaced. She said that the proposed is a buildout of the DISH network and will be bringing 5G. Chairperson Loftus asked why the equipment is being installed outside the hut. The Petitioner responded that consideration is more on the leasing side, and said she's not entirely aware of whose is located in the shelter. The Chairperson asked if there are plans to fix the fencing around the site. The Petitioner replied that she is not aware of any, but is happy to make a note of it for potential address. Commissioner Brown asked the Petitioner if there were issues with presenting the proposed as a 5G tower instead of as a DISH tower. Ms. Stouder replied that the tower is tall enough to accommodate multiple carriers, and that Crown Castle is the owner and will be able to support all services, 5G just being the newest technology that's being built out. While admitting that she might have missed mention of 5G in the packet, Commissioner Brown expressed concern in that 5G is "a touchy subject." Ms. Stouder stated that the 5G frequency about which there were issues at the airport is not one they'll be utilizing. Chairperson Loftus asked if it would be possible to add other carriers below the existing, to which the Petitioner replied, "Absolutely." Mr. Loftus asked if per Code another carrier would be mounted below the existing, to which Ms. Gendel replied that the special use is just for the height of the monopole (but that one below wouldn't need a special use). Sworn in, Atrian Fard, Sr. Planner 535 Duane, explained that if other equipment will be there above 45 ft., another special use would be required. Commissioner Thakkar observed that the proposed doesn't look that different from the current set-up. Commissioner Kreuzer moved to close the Public Hearing; seconded by Commissioner Arango, the motion passed by voice vote.

Discussion

Perceiving a replacement of abandoned antennas with newer, Chairperson Loftus said he doesn't see any reason the application should be denied. Commissioner Arango asked if 70 ft. was determined to provide greater coverage and better reception than 45 ft. Commissioner Cooper observed that cell service has become an issue of infrastructure – in the same way as cable or electric lines – and that citizens expect cellular coverage, hence a reason for expanding the use. Commissioner Arango asked whether then the 45 ft. zoning is a detriment. Commissioner Cooper said he doesn't think the Commission has heard evidence to that one way or the other, while Chairperson Loftus noted that tower height is dependent upon location (e.g., terrain) and coverage area. Commissioner Thakkar, who said his initial thought was whether there are any safety concerns, sees the proposed as reuse of an existing unused structure. Commissioner Brown said she is concerned about the range of public notification of the meeting, as neighbors outside the 350-ft. legally-obligated buffer might not know what is happening, and that some people might have questions about the 5G. She said that if the Commission recommends approval she'd like to see the Village, prior to the Board meeting for which the subject is slated for discussion, specify that this is a 5G tower. Commissioner Kreuzer noted that the community does have a population concerned about 5G and its environmental and health effects. He said 5G was "completely omitted" from the notice and the package, and that hopefully the Board will be aware of this and improve notice. Chairperson Loftus said he understands the remark, but noted that the Village didn't do anything different for this petition than others. Commissioner Kreuzer argued, however, that exposure goes beyond the notice requirement, saying the technology is "more pervasive." Commissioner Cooper moved for the following:

After conducting a public hearing and deliberating on the request of the petitioner, Tony Phillips of Fullerton Engineers Consultants LLC, on behalf of Crown Castle USA Inc. and DISH Wireless LLC, for approval of a Special Use Permit to allow an addition of DISH Wireless antennas and support equipment to the existing cellular tower at 1102 Hill Avenue in the I1 Light Industrial District, the Plan Commission hereby recommends approval based on the findings of fact, as discussed or amended at the Plan Commission public hearing on December 8, 2022, which are hereby incorporated into the Motion by reference as though fully set forth herein, and a copy of which will be attached to the minutes of this meeting and kept on file as part of the permanent records of the Village. The Plan Commission makes this recommendation of approval with the following conditions:

1. That the new DISH Wireless antenna added to the existing cellular tower be operated in substantial conformance with the plans and testimony presented at the Plan Commission public hearing and before the Village Board of Trustees.
2. That it be stated to the Village Board of Trustees that a purpose of the installation is for 5G.

Seconded by Commissioner Thakkar, the motion passed with Plan Commissioners Cooper, Thakkar, Arango, Dawson, Kreuzer and Saeed and Chairperson Loftus voting, "Yes," and Commissioner Brown voting, "No." (Commissioner Wyant had yet to join the meeting.)

Pre-Application – 750 Roosevelt Road

Staff Introduction

Senior Planner Fard explained that a pre-application meeting is requested to discuss the redevelopment of the property at 750 Roosevelt to construct of a Popeye's restaurant. The Petitioner, she said, is Woolpert Company on behalf of Aby Groups, represented by Jake Cooke and Ryan Walter. The Petitioner is in the process of negotiating a contract for the purchase of the property, she noted. The proposed project consists of the demolition of the existing 3,831SF building, and the construction of a new one-story-3,050SF Popeye's restaurant building with a drive-through, explained Ms. Fard. The project also calls for the redevelopment of the parking lot and undergrounding public utilities, she said, adding that the subject site is located on the northwest corner of Roosevelt Road and Taylor Avenue, approximately 145 ft. east of Roosevelt Road's intersection with Nicoll Avenue.

The subject site is currently located in the C4 Office District, which does not allow restaurants and drive-through facilities by right or by way of a Special Use Permit, continued Ms. Fard. Hence, she explained, the Petitioner is requesting approval of a Zoning Map Amendment to rezone the subject property to the C3 Service Commercial District, which allows for a range of uses including restaurants permitted by right and drive-through facilities by way of special use permits. The senior planner noted that Danby's Station Café has been operating at this location for many years as a legal nonconforming use. Since the majority of properties fronting on Roosevelt Road, between the Wheaton border and IL Route 53, are currently zoned C3 Service Commercial, including the properties immediately south of the subject property, and given the long history of the site being used as commercial, she said, Staff is supportive of this request and believes that C3 District is the most appropriate zoning for the site. The new building is compliant with all setback requirements of the C3 District, she stated. The Zoning Code requires 10-ft. landscape setbacks along Roosevelt Road and Taylor Avenue and an impervious surface setback of approximately 6.74 ft. around all four sides of the property, stated Ms. Fard. Although the project will not increase the amount of impervious area on the lot, to meet the current Code, Ms. Fard predicted, the Petitioner will be requesting approval of variations from landscape and impervious surface setbacks. It is important to note, she said, that the Development Committee requested the existing concrete sidewalk across the main frontage be moved further away from the Roosevelt Road's edge of the curb to enhance the safety of the pedestrians. To address this issue, the sidewalk needs to be placed within the limits of the property, leading to variations from the required landscape and impervious surface setbacks along the south property line. Sr. Planner Fard related that there will be a drive-through wrapping around the north side of the building, related Ms. Fard, who said that the new drive-through contains two lanes for ordering, merging into one lane at the service area on the west side of the building. Code, she said, requires five stacking spaces per drive-through lane for restaurants. While it seems approximately eight to nine cars would fit on this drive-through, which does not meet the minimum number of 10 stacking spaces required, she said, a variation will probably be required based on the current design. Under the Development Committee's direction, the petitioner modified the layout by shifting the building north and widening the one-way drive aisle to the south of the building to accommodate drive-through queue

and prevent conflicts with cars entering the parking lot. There will be a one-way escape lane around the drive-through, to allow internal circulation and exit from the drive-through. A SUP is required for a drive-through in the C3 Zoning District. Currently, access to the site is provided via a two-way drive on Roosevelt Road and a cross access from the US Bank site and Nicoll Avenue. The Petitioner, reported Ms. Fard, plans to utilize the existing access points and add a new two-way drive on Taylor Avenue. The main Roosevelt Road access drive will be restricted to a right-in/right-out only, which will need Illinois Department of Transpiration (IDOT) approval for the location and design of the access drive. Verification should be made of the cross access, potential easement, and agreement between the two lots to allow future traffic travel from or to Nicoll Avenue. As part of the formal application process, stated Ms. Fard, the Petitioner will be required to submit a traffic study. Code, indicated Ms. Fard, requires that a driveway approach be separated from an adjacent intersection of a major arterial street with another arterial or collector street either 200 ft., or length of full left turn storage on the arterial (in this case 330 ft.), whichever is greater. Approval of a Zoning variation will be required to allow the Roosevelt Road access drive to be located approximately 170 ft. from the adjacent intersection of Roosevelt Road and Nicoll Avenue to the west, she said. The proposed restaurant will be served by 12 parking stalls, including one accessible parking space proposed on the south side of the parking lot in front of the building entrance. The Site Plan indicates that the restaurant would have 36 seats, which satisfies the minimum requirement of one space for every three seats, said Ms. Fard, who added that although compliant with the Village minimum parking requirement, Staff believes additional parking would be needed due to the high demand for the Popeye's restaurant. The plans show landscape islands at the end of every parking row, except the northernmost end, where the trash enclosure will be placed. Also, said Ms. Fard, the size of the landscape islands along north-south parking row is less than the size of the parking spaces. Code requires landscaped islands to be provided at the end of every row of parking stalls with a minimum width and length equal to the size of the parking spaces in the subject lot. The Plan Commission may wish to encourage the Petitioner to amend the plans to provide landscape islands that are at least equal to the size of the parking spaces on the property as required by Code. A new trash enclosure and refuse area will be placed at the north end of the north-south parking row, within the required 30-foot corner side yard setback. Trash enclosures are not permitted obstructions in a corner side yard, she said, therefore, a variation will be needed. Ms. Fard said the Petitioner has indicated that all existing overhead utility lines located within the property limits will be undergrounded as part of the project. The proposed sign package incorporates the Popeye's corporate brand identity throughout, she said, which consists of six wall signs, one monument sign, three traffic directional signs, and two drive-through (clearance) canopy information signs. Ms. Fard described the wall signs: an internally illuminated orange one on the south elevation (fronting Roosevelt Road), reading "Popeye's Louisiana Kitchen; " one on the west elevation in corporate orange color; one mounted to the east elevation, reading "Louisiana Kitchen" and business establishment date of "1972," accompanied by a chicken logo; also a halo-lit wall sign on the south elevation displaying a vinyl walnut-toned chicken logo outlined by a white LED color; and a non-illuminated wall sign mounted to the east elevation and one to the west elevation, featuring white acrylic text in the corporate font.

Corner lots with single-tenant non-residential establishments in C3 District are allowed to have a maximum of two wall signs, explained Sr. Planner Fard: one mounted on the front and one on the corner side building elevations. The maximum sign area shall be limited to 1SF per linear ft. of establishment frontage for each sign, she said, adding that the proposed Popeye's establishment will have a 39.2- and 83-linear-ft. of establishment frontage on Roosevelt Road and Taylor Avenue, respectively. The proposal calls for six wall signs, one of which exceeds the maximum allowable sign area calculated based on the linear footage of the establishment, she continued, and said therefore, two variations for the maximum number and area of wall signs will be required. The proposed monument sign features an internally illuminated (LED) vertical box consisting of two sign cabinets, explained Ms. Fard. The base features walnut-toned, wood-grain skin with raised white channel letters reading "Popeye's," and exceeds the maximum allowable base height of 5 ft., she said, concluding that a variation will be required. The top sign cabinet displays a logo on a corporate orange background. The Sign Code restricts the total combined area of all signs on a corner lot improved with a nonresidential single tenant building to be 150SF, said Ms. Fard. The total area calculation takes into account all wall, freestanding and awning signs. As proposed, there will be approximately 277SF of wall and freestanding signage on the lot, which exceeds the requirement. Therefore, a variation will be required. She noted also proposed are three non-illuminated rectangular double-faced traffic directional signs, and two drive-through canopy informational signs that she said are excluded from the total sign area calculation. The proposal calls for several architectural elements, including decorative shutters, a partially covered entrance canopy, a trellis structure, and a partially covered drive-through awning, she noted. The project, stated Sr. Planner Fard, will not likely require any new stormwater detention or Post-Construction Best Management Practices measures because the site is largely comprised of impervious surfaces today. However, she added, the regulatory FEMA floodplain associated with the detention pond north of the site extends across the north half of the existing site. The proposed development calls for re-grading the site to properly elevate the new building and parking lot above the floodplain as required, she noted. The developers are required to provide compensatory floodplain storage, and if they are relocating the floodplain storage to the northernmost portion of the site; a floodplain volume in the amount of 150 percent of the existing floodplain volume will need to be provided, concluded Ms. Fard, who outlined Plan Commission action to be taken in response to this pre-application case.

Commissioner Discussion

Chairperson Loftus asked why the site was never (at least since 1988) a C3 district. Ms. Fard said she doesn't know. Mr. Loftus asked whether the project could move forward without the rezoning, to which Ms. Fard replied that it could not. Mr. Loftus asked about easement history vis-á-vis the US Bank property. Ms. Fard said a temporary easement was granted to Danby's Station many years ago, but further research will ensue with upon project application. Mr. Loftus asked the reason for the third entrance (off of Taylor, which he said is not designed for regular traffic). Ms. Fard said it is to ease traffic on the site and thinks it could be an exit only. Mr. Loftus said perhaps it could be a right-turn-only out.

The Chairperson asked if the parking plan takes into account any employee parking, to which Ms. Fard indicated it's not required in C3. Observing that westbound traffic can come over the hill "pretty quickly," Commissioner Kreuzer thought the proposed might create a safety concern. Commissioner Cooper asked the number of parking spaces the Village would recommend, to which Ms. Fard replied that it depends on the traffic impact study, but said she believes an additional two or three would do. Commissioner Brown observed that Raising Cane's (another chicken meal proprietor) has 32 parking spaces; Ms. Fard said its development was before her time with the Village, so she doesn't have information about it. Ms. Brown wondered about operating hours' impact on lighting, to which Ms. Fard said the Village doesn't regulate hours of operation for restaurants, but that conditions of approval could govern lighting. Commissioner Saeed articulated limitations of consideration sans a traffic study. Saying she fears creating "a Starbuck's situation" with traffic, Commissioner Arango expressed concern about a dangerous Roosevelt entrance with traffic backing up into 5 o'clock commuter traffic. Mr. Cooper wondered if entrances off of Nicoll and Taylor but not Roosevelt might help address the situation while making room for more parking. Chairperson Loftus advised that this could be recommended based on traffic studies. Commissioner Arango urged this, while Commissioner Saeed pressed for measures to alleviate stormwater risk. Ms. Fard disclosed that she'd conservatively reviewed the stacking configuration for what she anticipates will be a busy restaurant and concludes that the layout, in general, isn't bad.

Though he complimented the building's "beautiful design," Commissioner Kreuzer expressed concern about the lighting – particularly the lack of bulb shielding – calling the drive-through a "white nightmare." He encouraged less color temperature in line with Village standards, to which Ms. Fard said lighting would be examined. Roosevelt Road, Chairperson Loftus speculated about moving the eastern entrance south should the entrance from Roosevelt be scrapped, to which Ms. Fard said a speed limit requirement would dictate the distance to the drive approach, and suggested that the Village Engineer would need to evaluate this scenario , if proposed. To a suggestion from Commissioner Kreuzer to reduce the westbound speed limit on Roosevelt, Sr. Planner Fard responded that the road is not under Village jurisdiction, but rather IDOT's, which would evaluate impacts. Chairperson Loftus asked if the property owner would need to grant an easement to put in sidewalk. Ms. Fard replied, "Probably, yes." Endorsing "less is more," Commissioner Dawson opined the proposed has too much illuminated signage.

Petitioner's Presentation

Jacob Cook, Brian Walter (with Woolpert) and Chris Ludwig introduced themselves. Mr. Cook related that IDOT was consulted and deemed the right-in/right-out access way acceptable. He also said the dumpster could be relocated to the northeast corner, accommodating another parking stall or two. He reported that the sign vendor has already revised their plan per Code, which will be reflected in the submittal. Wondering about the size and location of the monument signs, Chairperson Loftus asked expressed concern about signage blocking the view of a driver trying to pull out of the lot, to which Mr. Cook replied that this will be taken into consideration. Noting the existing site is not compliant with

respect to the impervious area and landscape setbacks, Mr. Walter said the Petitioner is increasing the green space.

Mr. Ludwig said the building lighting is part of a value engineering effort eliminating the "hockey sticks" at the drive-through being. Commissioner Kreuzer advocated for "moody" amber lighting, expressing the hope that the globe lights will be better shielded. Mr. Ludwig explained that the globes represent the current brand standard expressing a "Mardi Gras" aesthetic, but said the Petitioner could see if there is an alternative. Commissioner said he's walked Louisiana, observing more of an amber color in New Orleans. Senior Planner Fard said the Village requires shielding. Saying that she doesn't want the dumpster in the northeast corner, Commissioner Brown said she'd prefer the space be converted to a walking path. Chairperson Loftus asked if the Petitioner had done due diligence on easements, to which Mr. Walter said it performed the survey but didn't see such notation. Though advising the Petitioner tone down the lighting and reduce the size of signage, the Chairperson commented that the modern architecture seems to blend in, and that the food and beverage tax would benefit the town. Mr. Walter said that the Petitioner could find extra parking stalls, but that 80 percent of the business is drive-through. Citing safety concerns, Commissioner Cooper asked if the restaurant could operate without a Roosevelt exit/entrance. Mr. Walter indicated that this could be explored in coordination with IDOT. Chairperson Loftus said the Commission doesn't like to do spot zoning, and asked if an easement granted from the bank would get rezoned. Sr. Planner Fard said there'd be no change. Commissioner Kreuzer said he has no problem with rezoning the property, saying it's long overdue. To a query from Commissioner Brown, Mr. Ludwig said mobile ordering is not part of the program. Commissioner Wyant asked if the business owner will also own the real estate, to which Mr. Ludwig replied, "Yes."

Public Comment

Norris Eber, 701 Kingsbrook, said that while he doesn't anticipate lighting problems, he lamented losing a breakfast option in the Village. He said he agrees with the proposed "right in-right out" design, saying it will take pressure off Nicoll, since use of Taylor Avenue is merely a "nice fantasy."

Public Hearing – 375 Roosevelt Road & 401 Taft Avenue

Commissioner Brown moved to open the Public Hearing to consider approval of Amendments to the Preliminary Planned Unit Development with deviations, Final Planned Unit Development (PUD), a Zoning Code Text Amendment, Special Use Permits, and variations from the Sign Code to accommodate the redevelopment and operation of a new car wash at 375 Roosevelt Road and an accessory parking lot equipped with vacuum stalls at 401 Taft Avenue – Lots 4 and 5 of the 375-395 Roosevelt Road Subdivision. Seconded by Commissioner Thakkar, the motion passed by voice vote.

Staff Introduction

Sworn in, Atrian Fard, Senior Planner, 535 Duane, stated that the Petitioner, JB Development represented by Dave Dalesandro, Sam Youssef, and Professional Engineer Lauren Kucinski from Veenstra & Kimm. Ms. Fard explained that the subject property is comprised of two lots for a total area of

75,111SF and is part of the five-lot commercial development at 375-395 Roosevelt Road located between Lambert Road and Main Street. To proceed with the project, she continued, the Petitioner will need approval of a Zoning Text Amendment, amendments to a preliminary PUD for Lots 4 and 5 with zoning deviations, approval of Final PUD, a special use permit for Lot 4 to allow a car wash, a special use permit for Lot 5 to allow automobile services, and variations from the sign code. She noted that a preliminary PUD for the entire site expired in November 2021, and as part of the entitlement process, a deviation needs to be granted by the Village Board. The Petitioner will also need exterior appearance approval from the AAC, which is to meet next week. The entire development site is made up of 4.19 acres, which was formerly used for Leslie Car Wash and Enterprise Rent-A-Car rental service, related the senior planner. In November 2017, she said, the Village Board granted approval for a Major Subdivision to re-subdivide the property to create five new lots and a Preliminary PUD to redevelop three restaurant establishments on Lots 1-3 and an office building on Lot 5. The western parcel on the site, Lot 4, was occupied by Leslie Car Wash at the time and intended to remain as an ongoing business until its redevelopment, she related. Now, she continued, the Petitioner is proposing to demolish the existing car wash on Lot 4 to construct a new 5,200SF one-story car wash with vacuum stations, automated pay stations and designated stacking lanes. The proposal also calls for improvement of the existing parking lot on Lot 5, to accommodate a new parking lot with additional offsite vacuum stalls and employee parking spaces.

The northern parcel at 375 Roosevelt in the C3 Service Commercial District and the southern parcel at 401 Taft is in the C4 District, said Ms. Fard. Lot 4 in C3 will be used for a car wash, which is allowed in the C3 District with the approval of a Special Use Permit. Supplementary vacuum stalls will be proposed on Lot 5 located in the C4 District. As C4 District does not regulate automobile services such as vacuum stalls, a text amendment to the list of special uses in the C4 District will be required to accommodate the standalone vacuum operations on Lot 5. The proposed car wash facility and associated vacuum stalls would operate from 7:00 a.m. to 9:00 p.m. seven days a week. The facility would be staffed at any given time with two to three employees. At maximum capacity, the facility would serve up to five cars. It is estimated that the car wash and pay stations could service 140 cars per hour. Sr. Planner Fard explained that customers will enter the car wash establishment on Lot 4 from the three north-south lanes proposed on the west side of the building, where three separate pay booth stations are located under a canopy. Once payment is completed, staff will guide customers onto the car wash entrance on the south side of the building. The Jet Brite facility will offer an express wash that allows customers to remain in their vehicles as cars enter a 150-ft.-long conveyorized car wash tunnel, where cars are cleaned and heat dried. Cleaned vehicles will exit the tunnel from the north end of the building, where customers can turn left and leave the site or turn right to either go to Lot 3 (Buona Beef) or loop around to the east side of the car wash building to use the available vacuum stations. The vacuum station on Lot 4 will be sourced from a central vacuum system located inside the car wash building. If all vacuum stalls on Lot 4 were in use, she said, customers would be directed south across Taft Avenue to use the additional vacuums available on Lot 5. Lot 5 vacuum stations on will be serviced by enclosed freestanding vacuum stations

on-site. While Lot 4 complies with the minimum lot requirements in the C3 District, Lot 5, with a depth of 132 ft., is considered shallow and does not comply with the C4 District's minimum lot depth requirement of 140 ft. Therefore, explained Sr. Planner Fard, a deviation from the C4 District's lot depth regulation will be required to allow improvements on a nonconforming lot.

Accessory structures serving Lot 4 include three pay booth stations west of the car wash building with an arched canopy, an arched vacuum canopy east of the building, and a combined vending/trash enclosure at the southeast corner of the building. There will be no principal building on Lot 5 but three arched vacuum canopies: at the center of the lot; along the south property line; and along the east property line. Also planned, she indicated, is a combined vending/vacuum mechanical enclosure on the central island, a vacuum mechanical enclosure on the south of the lot, and a combined trash/vacuum/electrical enclosure on the southeast of the lot. Per Code, related Ms. Fard, an accessory structure shall be located no closer to the front property line than the principal building. Lot 4 is considered a through lot with two front yards fronting Roosevelt Road and Taft Avenue. According to the PUD Plans, the pay booths, their canopy, and the vending/trash enclosure on Lot 4 will be located closer to Taft Avenue than the car wash building. Therefore, deviations will be required. Furthermore, the trash enclosure encroaches 15 ft. into the required front yard setback of 40 ft., where trash enclosures are not permitted obstructions in the required front yard, hence an additional deviation will be required for the location of the trash enclosure on Lot 4. The proposed car wash building on Lot 4 and accessory structures on Lot 5 comply with the setback requirements, stated Ms. Fard. The Zoning Code requires an impervious surface setback of 7.44 ft. around all sides of Lot 4. The Petitioner is requesting approval of a zoning deviation to allow an impervious surface setback of as little as 1 ft. from the western property line to allow for as much vehicular maneuvering area as possible.

The Petitioner is also requesting a deviation to allow an impervious surface setback of 11 ft. along the southern property line on Lot 5 in lieu of the minimum 13.87 ft. of requirement. The C4 District further requires a minimum of a 10-ft. landscape setback along any adjacent roadway. An 8.5-foot setback is proposed along Taft Avenue that will require approval of a deviation. Given Lot 5's limited, or nonconforming, lot depth, explained Ms. Fard, the Petitioner had to modify the plans several times to achieve compliant drive isle and parking space dimensions, resulting in a reduction of southern impervious surface setback and northern landscape setback. The Zoning Code requires one space for each two employees, plus reservoir parking space or stacking space equal to five times the maximum capacity of the washing unit. According to the Petitioner, the maximum capacity of the washing unit is four cars, translating to a 20 parking spaces requirement, plus two spaces needed for car wash employees. The Petitioner plans to construct 10 parking spaces on Lot 4 and 42 on Lot 5, totaling 52 parking spaces on the subject property, said Ms. Fard, which exceeds the minimum 22 required. Unlike Lots 1-3, she noted, the car wash will not share parking with the other uses in the development. Ms. Fard added that 49 of 52 parking spaces will be covered by canopies and equipped with vacuums, including two accessible parking spaces on each lot, and said that three regular employee parking spaces will be located on Lot 5.

The net area of the principal building on Lot 4 requires one 12 ft. by 50 ft. loading area, continued the senior planner. The Petitioner is proposing a loading space at the northwest corner of the car wash building on Lot 4. The proposed loading space will comply with the number, size and setback requirements, but a deviation will be required as the loading zone will be visible from the public right-of-way (Roosevelt Road). Loading will take place outside of operational hours, she noted. Access to Lot 4 will be provided via full three-lane access off Roosevelt Road and outbound-only access to Taft Avenue in addition to one cross-access connection to Lot 3. The IDOT has jurisdiction over Roosevelt Road, and any redevelopments in the IDOT Right-of-Way will require a Permit from the agency. The Plan Commission may wish to consider a condition requiring IDOT approval of the proposed Roosevelt Road access prior to issuing any building permit for Lot 4. No new points of access are proposed for Lot 5, and the two existing access drives along Taft Avenue will be redeveloped and continue to operate as full access drives. According to the traffic impact study, the impact of the proposed car wash on the roadway network is small and levels of service at the nearby intersections of Roosevelt with Lambert, Main, Hillcrest and Greenwood, as well as Taft's intersection with Lambert and Main, will remain acceptable and adequately accommodate the projected traffic volume. The study states that the use of Lot 5 as a supplemental space for the car wash vacuums will result in various routes for ingress and egress, minimize turning movement conflicts, and further disperse traffic, which limits the development's impact on the area. Ms. Fard added that the Village's Traffic Consultant does not have any issues with the study's analysis.

Sr. Planner Fard related that the Petitioner is requesting approval of a Zoning deviation to allow the Roosevelt Road access drive to have approximately 153 ft. and 150 ft. of spacing from the adjacent drives to the east and west, respectively, in lieu of the 180 ft. required between driveway approaches located on arterials with 35 mph speed limit. Three queueing lanes to the car wash will be located on the west side of the building, with three pay booth stations at the southwest corner of the building. The proposed drive-through and stacking spaces will be compliant with the Code and will not interfere with internal circulation of the site. The Petitioner, continued Ms. Fard, is requesting approval of a deviation to allow the absence of a landscape island at the southern end of the parking row on Lot 4, where a landscaped island shall be provided at the end of every row of parking stalls with a minimum width and length equal to the size of the parking spaces in the subject lot. Other landscaped islands proposed throughout the subject site will comply with the Zoning Code, she noted. The Petitioner is providing a significant amount of landscaping throughout Lots 4 and 5 with a mixture of shrubs, ornamental trees, deciduous plants, and evergreens, stated Ms. Fard. The proposed landscaping complies with all regulations of the Zoning Code, she said, adding that further review of the Landscape Plan will be done by the Architectural Appearance Commission (AAC). The Petitioners have submitted a photometric plan indicating that the maximum illumination levels at all property lines will be compliant with Code. She added that all light fixtures will be fully shielded and the height of light poles will be less than the overall height of the building and in accordance with Code.

PUD regulations, explained Ms. Fard, require 15 percent of the total development area be dedicated to open space. Of the 15 percent being provided as open space, 10 percent must be provided for quasi-public open space. The Petitioner is providing a total of 25.1 percent open space on Lot 4, with 40.2 percent of the quasi-public open space on Lot 4. As a public amenity in the quasi-public open space, related Ms. Fard, the Petitioner is proposing a patio northeast of the building and two separate public sitting areas on the northeast and southwest corners of the lot. The Village Stormwater Engineer, related Ms. Fard, reviewed the plans and indicated that the Petitioner should be able to comply with the Stormwater Ordinance and that they are comfortable addressing any outstanding engineering issues as part of the building permit process. (A condition requiring all remaining engineering issues be finalized and approved prior to the issuance of any building permit might be considered, advised Ms. Fard.) Several signs are proposed for the car wash on Lots 4 and 5, including two internally illuminated wall signs on the building, said Sr. Planner Fard, who described these as a 104.8SF one on the north elevation, slightly tilted with yellow lettering; and a secondary wall sign on the east elevation that is be 93.6SF in area and require a variation due to the building size. Another variation, she stated, will be needed to allow a total combined sign area of 198.4SF on Lot 4, where the total square footage of signage permitted on the site is 120SF.One double-faced, internally illuminated, freestanding monument sign is proposed at the northeast corner of Lot 5, continued Ms. Fard, who said its 1.4-ft. base will be constructed with the same material and color to match the accessory structures and retaining wall on Lot 5. The freestanding sign will meet all requirements, including number, setback, height, base height, and landscaping around the base, she stated, and added that three compliant, illuminated directional signs are also proposed. Ms. Fard outlined Plan Commission action and potential conditions to attach.

Commissioner Questions

Commissioner Cooper asked about the need for the number of parking spaces specified, to which Ms. Fard explained that Code doesn't distinguish between express car washes and those at which customers might park their cars for staff clean them. Commissioner Brown asked if Lot 5 will be separately staffed, to which Ms. Fard replied, "No." Expressing concern about potential loitering, the Commissioner then asked if Lot 5 would be safety surveilled, to which Ms. Fard deferred to the Petitioner. Chairperson Loftus asked if the business would be considered retail, to which Ms. Fard said it is considered a service, the definition of which was contemplated by Commission members. Commissioner Arango asked if detailing would be offered as a service, a query the Chairperson suggested be directed to the Petitioner.

Petitioner's Presentation

Sworn in, Dave Dalesandro, 590 Killdeer Drive, Bolingbrook, Ill., expressed pride in his business and its focus on maintenance and cleanliness. He said Lot 5 would be staffed, and named three employee functions at his car washes – customer guidance; cleaning and sweeping the vacuum area; and safety and traffic – stating that the Petitioner never wants traffic to back up onto the main street. Mr. Dalesandro explained that the entrance would be closed off (intermittently) on busy days to avoid backups, and noted that traffic can exit out to Taft. He said signs will direct folks to Taft vacuums.

When Commissioner Cooper asked how many vacuum stalls the Petitioner would install if there were no space constraints; citing competitive advantage, Mr. Dalesandro replied, “As many as we can.” Mr. Wyant asked if the Petitioner’s model (i.e., value proposition vs. high-touch) would resonate in affluent Glen Ellyn. “Absolutely!” replied Mr. Dalesandro, who said, “People like a great value.” Citing golfer concerns about a “vacuum farm” up against The Links, Chairperson Loftus asked if the canopy configuration could help abate noise. While he said canopy angle has nothing to do with sound, Mr. Dalesandro insisted that the Petitioner doesn’t want sound to spill on to the golf course. He said the new vacuums are quiet and will be in a bricked area, and any nozzle suction noise problem will be addressed. Commissioner Kreuzer perceived Jet Brite had been purchased by car wash enterprise, Zips. Mr. Dalesandro described the arrangement as an equity partnership allowing Jet Brite to retain operational control and branding. Commissioner Kreuzer asked if lights uniform with the town had been considered, and inquired about after-hour lighting. Mr. Dalesandro said lights have been toned down for this project, and for security, lighting would be kept at a minimum outside business hours (which are based on customer needs and preferences). Chairperson Loftus asked if the Petitioner would be willing to reduce the sign size on Lot 4, to which Mr. Dalesandro said the branding is smaller than on their other buildings, and here there is no front sign. Commissioner Dawson asked if there was a time limit on vacuum use and asked if customers could stick around post-wash to detail their cars. Mr. Dalesandro said there is no time limit, but the car wash is “not set up” for self-detailing. Chairperson Loftus asked if people vacuum cars without purchasing a wash. Mr. Dalesandro responded affirmatively, but the assumption is they got a car wash previously. Commissioner Brown asked how far people travel to Jet Brite washes. Not sure, Mr. Dalesandro said with more Jet Brite sites, customers don’t have to go as far. Commissioner Cooper asked if the Police were concerned about cars shuttling across Taft. Ms. Fard said she believes such concerns would have been addressed in the Development Committee review.

Public comment

Sworn in, Tom Van Winkle, 28w677 Trillium Drive, Winfield, stated that he owns the property at 415 Taft – the property to the east of Lot 5 – operating the business, “Sign Identity.” He said he is concerned that changing the Code from “Office” to “Automotive Repair” opens up other uses for that property besides vacuuming – conceivably, tire changing and other work. He also cited as a concern movement of traffic across the street to the vacuum areas. Sr. Planner Fard explained that only that being proposed is up for approval. Commissioner Brown asked if the Petitioner plans to expand services, to which Mr. Dalesandro replied, “No,” citing staffing challenges in attaining a marketable price point.

A motion to close the Public Hearing was made by Commissioner Saeed; seconded by Commissioner Arango, the motion passed by voice vote.

Commissioner Discussion

With no opposition voiced to what Staff has recommended Commissioner Kreuzer moved for the following:

After conducting a public hearing and deliberating on the requests of the petitioner, JB Development, Inc. on behalf of MIKI Properties, LLC – Roselle, for approval of Amendments to the Preliminary Planned Unit Development with deviations, Final Planned Unit Development, a Zoning Code Text Amendment, Special Use Permits, and variations from the Sign Code to accommodate the redevelopment and operation of a new car wash at 375 Roosevelt Road and an accessory parking lot equipped with vacuum stalls at 401 Taft Avenue – Lots 4 and 5 of the 375-395 Roosevelt Road Subdivision, the Plan Commission hereby recommends approval based on the findings of fact, as discussed or amended at the Plan Commission public hearing on December 8, 2022, which are hereby incorporated into the Motion by reference as though fully set forth herein, and a copy of which will be attached to the minutes of this meeting and kept on file as part of the permanent records of the Village. The Plan Commission makes this recommendation of approval with the following conditions:

1. That the petitioner construct, maintain, and operate the development in substantial conformance with the plans and testimony presented at the Plan Commission public hearing and before the Village Board of Trustees.
2. That Village Board approves an ordinance extending the expiration date of Ordinance No. 6546 and 6771 to November 13, 2023.
3. That no work on the project should commence until an IDOT right-of-way permit has been issued for the project.
4. That a stormwater management information and Stormwater Certification Application shall be submitted with permit plans for the project.

Seconded by Commissioner Brown, the motion passed by roll call vote, with Plan Commission members Kreuzer, Brown, Arango, Cooper, Dawson, Saeed, Thakkar, Wyant and Loftus voting, "Yes."

Staff Report

Sr. Planner Fard said that currently no business is in sight for a January meeting.

Chairperson's Report

Mr. Loftus confirmed that Plan Commission meetings will be going from two scheduled per month to one (which, he said, could run longer, though noted that special meetings could be set).

Trustee's Report

Trustee Thompson reported that the budget and the levy were approved.

Adjournment

After wishing all a Merry Christmas, Chairman Loftus adjourned the meeting at 10:28 p.m., following voice vote passage of a motion by Commissioner Cooper and seconded by Commissioner Saeed.

Respectfully submitted,

Barbara Dutton-Thomas, *Recording Secretary*

Minutes
Village of Glen Ellyn
Regular Village Board Meeting
Monday, February 13, 2023
7:00 PM
Glen Ellyn Civic Center, Galligan Board Room

A. Call to Order – 7:00 PM

B. Pledge of Allegiance

C. Roll Call

Upon roll call by Clerk Cosby, President Senak and Trustees Christiansen, Fasules, Gould, and Thompson answered "Present." Trustee Payne was absent.
Trustee Kalinich arrived after roll call.

Also in attendance: Village Manager Franz, Assistant Village Manager Rodman, Village Attorney Mathews, Public Works Director Buckley, Finance Director Noller, Community Development Director Scott, General Manager Vesevick, Deputy Chief of Police Vavra, and Fire Chief Clark.

D. Audience Participation

Billy Joe Mills, Village resident representing the group, Hen Ellyn, spoke on wanting to be able to raise chickens within the Village. His reason for wanting this is to connect his children with the land. He wants the opportunity to teach his children where food comes from and feel the hens are a great way to teach this.

Will Weicher, Village resident representing Hen Ellyn, spoke on the proposal to allow chickens within the Village. He pointed out that the group, Hen Ellyn, is a diverse group with a common goal. He emphasized that keeping hens helps reduce waste as they eat food scrapes.

Emily Henkels, Village resident representing Hen Ellyn, gave her views on allowing henkeeping in the Village. She also read another supporter's reasons for wanting the Village to permit raising chickens.

Mary Eileen Gaudette, Village resident representing Hen Ellyn, gave her perspective of why hen keeping would be a positive activity for the Village, especially in teaching children about the real world. She emphasized the desire to add life cycle lessons to her children's education. Her son Paul spoke about wanting fresh eggs and how fun it would be to keep chickens.

David Firchau, Village resident, gave his views on affordable housing on the Roosevelt/Taft property. He spoke unfavorably about his experience growing up near the now-closed hotel and felt that the space should remain retail or commercial.

Nicolas Nelson presented a petition to keep the entire Roosevelt/Taft site commercially developed. He gave several reasons for the petitioners' belief that commercial is the best use of the site, highlighting increased funding for District 89. Among other points, he reiterated that Roosevelt Road is not zoned for residential and should be treated as the gateway to Glen Ellyn.

Renie Atchison, Village resident, believes that IDD housing and group homes need to be added to the comprehensive plan. She also explained what this type of housing is and who it involves. She believes the community would support this type of housing.

Patrick Vantiem, Village resident, gave his thoughts on the redevelopment of the Roosevelt/Taft property and his belief it should be a commercial development for the tax revenue.

Pete Ladesic, Village resident, submitted an on-line comment regarding the development of the Roosevelt/Taft property and the importance of the site for tax revenue.

E. Consent Agenda - The following items are considered routine business by the Village Board and will be approved in a single vote in the form listed below:

RESULTS:	**APPROVED [5 to 0]**
MOVER:	**Trustee Thompson [Items 1 – 4]**
SECONDER:	**Trustee Kalinich**
AYES:	**Thompson, Kalinich, Fasules, Christiansen, Gould**
NAYS:	

Motion to approve the following items including Payroll and Vouchers totaling $3,440,429.65. These agenda items have been reviewed by the Management Team and Village Attorney and are consistent with the Village's purchasing policy (Trustee Thompson).

1) Total Expenditures (Payroll and Vouchers) - $3,440,429.65

2) Motion to Approve the Recommendation of Village President Mark Senak for the Appointment of Nancy McKee as a Commissioner to the Community Relations Commission for a term ending July 31, 2025

3) Motion to Approve Ordinance No. 7020, An Ordinance Amending (Liquor Control Code) Chapter 19 of Title 3, Section 11 (Classification of Licenses) of the Village Code of Glen Ellyn, Illinois, by Amending the Class B-7 Liquor License Classification and Amending Chapter 19 of Title 3, Section 3-19-11 (B) (Village Attorney Mathews)

Trustee Fasules asked General Manager Vesevick about allowing people to bring in liquor when alcohol is its best revenue stream at Reserve 22. General Manager Vesevick replied it was just to allow BYOB is January and February when sales are slow.

Trustee Gould asked a follow-up for clarification.

President Senak asked if this allowance would be at the discretion of General

Manager Vesevick as to who can bring in alcohol. General Manager Vesevick replied.

4) Motion to Approve a Plat of Easement for the Purpose of Stormwater Management - Glen Oak Country Club, 21W451 Hill Avenue, Glen Ellyn, IL (Community Development Director Scott)

F. Special Use Permit – Dish Wireless (Community Development Director Scott) (Trustee Thompson) PERMIT NOT APPROVED

RESULTS:	**APPROVED [4 to 2] Re-Notice/Public Hearing/Plan Commission/ Board Review**
MOVER:	**Trustee Thompson**
SECONDER:	**Trustee Gould**
AYES:	**Thompson, Gould, Christiansen, President Senak**
NAYS:	**Fasules, Kalinich**

1) Motion to Approve Ordinance No. 7021, An Ordinance Granting Approval of a Special Use Permit to Allow an Addition of DISH Wireless Antennas and Support Equipment to the Existing Cellular Tower at 1102 Hill Avenue, Glen Ellyn, IL

Community Development Director Scott gave an overview of the proposal and details of the special use. He gave a brief history of the need for a special use permit. Ariel Stouder from Fullerton Engineering was available to answer questions.

President Senak asked how the installation is configured to protect the safety of the residents from 5G. Ms. Stouder replied, explaining the science of 5G and how to keep 5G safe for the public.

Trustee Thompson asked if there were existing 5G antennas in the Village. Community Development Director Scott replied.

Trustee Thompson asked about the legal reports necessary for 5G and if they have been completed. Attorney Mathews replied, explaining the legal logistics of frequencies under TelCom rules and regulations and the Village's responsibilities.

Trustee Gould asked about what first phase is for this application. Attorney Mathews replied. Ms. Stouder explained how the height of the tower limits the number of towers needed as well as the difference between small cell and the tower.

Trustee Kalinich asked if residents had come forward either in favor or against. Scott replied, "no."

Trustee Gould asked if this was because the notice wasn't detailed and distributed widely enough for people to know about it. Attorney Mathews replied.

Trustee Fasules commented that it's just spot coverage to fill coverage in this area, not to stream massive amounts of information.

Trustee Thompson asked if it was for cellular products. Ms. Stouder replied.

President Senak added that because it's an existing tower the physical dimension does not change, the Board may have no jurisdiction to regulate the special use.

Nancy Perlman, Village resident and expert of wireless service, urged the Board to not allow this special permit, or at least to table it, to research 5G, and its effect of the community, more thoroughly before making any decisions. She was concerned it would encourage the operators to add more carriers to the tower.

Trustee Thompson asked if a NEPA review should be required. Attorney Mathews replied to it and gave details about why it is not required.

Ms. Stouder gave her views on the NEPA review and that its purpose is to protect the environment and historic areas.

President Senak reiterated that he wanted his question answered about jurisdiction as to whether tabling for more information would matter in this case. Attorney Mathews replied.

Ms. Perlman added that no one has proved that 5G is safe. She added that the reasons for needing it should be researched to confirm the current service is necessary.

Ms. Stouder replied with more information about Dish Cellular.

President Senak asked Ms. Stouder if a further statement about the special use as a condition of the permit being issued.

Trustee Gould suggested getting the statement, reviewing it, and then debating the approval – in other words, re-notice and remanded back to the Plan Commission.

President Senak noticed requirements seem inadequate and should be extended to give more people a chance to voice their opinions.

Assistant Village Manager Rodman asked what the notice radius should be for the re-notice. Village Manager Franz suggested using the distance that is used in practice - 350 feet. The Board agreed with this distance, provided that the notice specifically referenced that this was a 5G installation.

Ms. Stouder added that it is just an evolution of the technology, from 4G... LTE... and now 5G.

In an unrelated issue, Trustee Gould asked for a Workshop to reconsider the zoning of vape stores in the Roosevelt Road corridor.

G. Reminders

1) Village Board Special Workshop, Thursday, February 16, 2023 - 7:00 pm
2) Village Board Workshop, Tuesday, February 21, 2023 - 7:00 pm
3) Village Board Meeting, Monday, February 27, 2023 - 7:00 pm

H. Motion to adjourn for Closed Executive Session to discuss the setting of a price for sale or lease of property owned by the public body, pursuant to 5 ILCS 120/2 (c)(6), and collective negotiating matters between the public body and its employees or their representatives, or deliberations concerning salary schedules for one or more classes of employees, pursuant to 5 ILCS 120/2(c)(2), and the appointment, employment, compensation, discipline, performance, or dismissal of specific employees of the public body or legal counsel for the public body, including hearing testimony on a complaint lodged against an employee of the public body or against legal counsel for the public body to determine its validity pursuant to 5 ILCS 120/2 (c)(1), without returning to open session thereafter

RESULTS:	**APPROVED [5 to 0]**
MOVER:	**Trustee Kalinich**
SECONDER:	**Trustee Gould**
AYES:	**Kalinich, Gould, Thompson, Fasules, Christiansen**
NAYS:	

Adjourned – 8:32 PM

Glen Ellyn Plan Commission
535 Duane Street
Glen Ellyn, IL 60137

Meeting 5/25/2023 7:00 PM
Department: Community Development
Department Head: Marty Scott
Category: Commission Recommendation
Prepared By: Marty Scott

AGENDA ITEM (ID # 2023-569)

DOC ID: 2023-569

415 Taft Avenue: Discussion and Recommendation - Special Use Permit to allow the addition of Dish Wireless 5G capable antennas and support equipment to an existing cellular tower.

Statement of the Issue:
Please see the attached staff report.

Analysis:
Please see the attached staff report.

Budget Impact:
N/A

Contribution to Strategic Plan (if applicable)

Action Requested:
The Plan Commission may make a recommendation to the Village Board for approval, approval with conditions, or denial of the request.

Attachments:
1. PC Staff Report 415 Taft SUP - 5-25-23
2. Cover Letter 415 Taft
3. SUP Application 415 Taft
4. Crown Castle - 1102 HIll and 415 Taft - Legal Analysis - Letter to Plan Commission
5. Draft Findings of Fact
6. Draft Motion to Approve
7. Structural Calcs 415 Taft
8. Constuction Drawings 415 Taft Submitted 2.10.23
9. Boundary Survey 415 Taft
10. Plat of Survey 415 Taft
11. Narrative on 5G Concerns 415 Taft-SUP 2-9-23
12. Narrative Statement 415 Taft
13. Notice of Elligible Facilities Request 415 Taft
14. RF Letter 415 Taft
15. Public Hearing Notice - 415 Taft -amend to include 5G notice
16. Buffer Map

17. Certificate of Publication 415 Taft sup

STAFF REPORT

TO: Glen Ellyn Plan Commission

FROM: Marty Scott, Director of Community Development

DATE: May 19, 2023

FOR: May 25, 2023 Plan Commission Meeting

SUBJECT: OBO Crown Castle USA Inc. & DISH Wireless LLC – 415 Taft Avenue – Special Use Permit

---

PETITIONER: The petitioners are Crown Castle and DISH Wireless, represented by Tony Phillips and Ariel Stouder of Fullerton Engineering, as licensee of a portion of the property located at 415 Taft Avenue.

REQUEST: Crown Castle and DISH Wireless are requesting approval of a Special Use Permit in accordance with Sections 10-4-16(E)2 and 10-8-8 of the Glen Ellyn Zoning Code to allow an addition of DISH Wireless 5G capable antennas and support equipment to the existing cellular tower.

PUBLIC NOTICE: Notice of the public hearing was published in the April 12, 2023 edition of The Daily Herald advertising a public hearing to be held on Thursday, April 27, 2023. Notices were mailed to property owners within 350 feet of the subject property as shown in the attached Public Hearing Notification/Buffer Map. A placard was also placed on the site. (The hearing was opened on April 27, 2023, and public comment and Commission discussion ensued. The discussion of this request occurred simultaneously with the Crown Castle proposal for 1102 Hill Ave.). The Commission closed the hearing and tabled the request until the May 25, 2023, meeting).

LOCATION/ SURROUNDING USES: The subject structure is located on the south side of Taft Avenue between Lambert Rd. and Main St. in the C4 Office District. The existing establishment on the site is currently occupied by Sign Identity, a sign manufacturer. The surrounding zoning and land uses are as follows:

Surrounding Land Uses:	Surrounding Zoning:
North: Commercial (Restaurants)	C3 Service Commercial Dist.
South: Recreation (Links GC)	CR Conservation/Recreation
East: Vacant	C4 Office District

West: Vacant (Future car wash/vacuums) C4 Office District

COMP PLANS: According to the 2001 Glen Ellyn Comprehensive Plan, the subject property is designated as an office use.

PROJECT HISTORY: According to Department records, cellular service providers (or their representatives) have petitioned for modifications to the existing tower in the past. As technology has evolved, it is not uncommon for towers of this style to be updated with structural improvements and incremental changes to antennas and support equipment. From 2012 to the present there have been upgrades to the existing tower including concrete tower base, antenna upgrades, and shelter and support equipment modifications.

April 27, 2023 Plan Commission: The Plan Commission opened the public hearing on April 27th to solicit comments regarding both the 1102 Hill and 415 Taft requests. The public comment focused on concerns regarding 5G's impact on the health of residents. The comments are included with the draft minutes. The Commission listened to testimony from representatives from Crown Castle, Dish Wireless, and others before deliberations began. The Commission ultimately decided to close the public hearing and table the issue until the May 25, 2023 meeting. The Commission requested that the Village Attorney provide an opinion relating to the Commission's review of the request in relation to property values. Attorney Mathews has provided this information directly to the Commission in a confidential memorandum. The Crown Castle submittal remains unchanged from previous reviews and the same meeting materials have been provided again for your review.

PROJECT SUMMARY: The petitioners are proposing to install an additional carrier antennas and associated equipment on the existing cellular (lattice) tower. (A good portion of this summary and Plan Commission action section are identical to the 1102 Hill special use request). The proposed additions will neither increase the height of the tower nor the existing leased ground footprint. The proposed DISH Wireless antennas will be unmanned and will only require power and fiber connections that already exist on the site. It will require service by a technician approximately once a month.

In addition to the above-mentioned services, the proposed antenna equipment would support 5G technology. The petitioner has provided a Radio Frequency (RF) interference statement provided by DISH RF

Engineers to confirm that all frequencies utilized by DISH Wireless shall follow guidelines enforced by the Federal Communications Commission (FCC). The FCC grants licenses for the use of certain radio frequencies exclusively by wireless service providers, including DISH Wireless, which shall use certain frequencies (channels) on which to transmit and receive radio signals. Pursuant to these licenses, DISH is authorized to provide wireless service nationwide. Per petitioner's narrative statement, the proposed DISH antennas will comply with all FCC rules regarding interference to other radio services and human exposure to radio frequency energy and will not present any detrimental effect to the community public safety, health and/or welfare, even with the 5G technology capability.

The proposed antenna will be installed near the upper portion of the tower at approximately 126 feet high. According to the petitioner, the cellular tower at 415 Taft Avenue has been selected to fill a gap in the DISH Wireless network as the tower's height and location are important factors in determining how network coverage can be expanded. The petitioner adds that the higher the structure is the farther the coverage will extend. Per Section 10-4-16(B)13, television and radio towers and antenna support structures that exceed district's maximum height, will require a Special Use Permit. Given the maximum allowable height of 55 feet in C3 District, the proposed antenna will require approval of a Special Use Permit. Section 10-4-16(E)2 confirms the requirement for a Special Use Permit stating that "the height of a television or radio tower, antenna support structure… shall be specified in the ordinance granting a special use permit".

Zoning Code Section 10-8-7 also states that the "lawfully existing, nonconforming use of part or all of a building or structure, all or substantially all of which building or structure is designed or intended for a use permitted in the district in which it is located, may be continued" subject to the provision stating the "nonconforming use of part of a building or structure shall not be expanded or extended". Given the legally nonconforming height and operation of the existing tower, the proposed work therefore triggers a need for a Special Use Permit, as the intended work expands upon the existing nonconforming use.

PLAN COMMISSION ACTION: The Plan Commission is asked to consider the petitioner's request for a Special Use Permit to allow an addition of DISH Wireless 5G capable antennas to the existing cellular tower and the addition of support equipment at the base of the tower in a licensed area.

The Plan Commission may make a recommendation to the Village Board

for approval, approval with conditions, or denial of the request. The Village consulted with Attorney Adam B. Simon, of Ancel Glink, regarding the certain factors the Plan Commission may consider in reviewing the current Special Use Permit proposal (please see Ancel Glink's Memorandum attached). Accordingly, the Plan Commission is legally directed to base its decision on the evidence limited to facts that tend to either support or undermine satisfaction of the criteria for granting approval of a Special Use Permit as set forth in Section 10-10-14 of the Glen Ellyn Zoning Code. Some permissible bases for decisions include height, setbacks, structural aspects, property value concerns, and community character. So long as the petitioner verifies that the FCC regulations for limiting RF emissions will be met, the Plan Commission is not authorized to further inquire about the general impact from radio frequency (RF) emissions or place further conditions on its Zoning decision. Additional review and commentary related to the proposed antenna and associated equipment was provided prior to the April meeting by Stuart Chapman, President of Municipal Services Associates, Inc. Mr. Chapman's firm specializes in the evaluation of telecommunications matters impacting municipalities. Mr. Chapman also attended the Plan Commission meeting and concurred with the findings of the Village Attorney and Village counsel.

Staff has prepared draft findings of fact for a recommendation of approval of the Special Use (attached). Plan Commissioners should feel free to modify the findings based upon information provided at the public hearing. If Commission members wish to recommend denial of the request and would like staff to prepare a motion to deny, please contact staff in advance of the meeting. A draft motion to approve has been attached for the Plan Commission's review and use.

ATTACHMENTS:

cc: Tony Phillips, Fullerton Engineering Consultants
Ariel Stouder, Fullerton Engineering Consultants

X:\Plandev\PLANNING\DEVELOPMENT PROJECTS\Taft\Taft 415, SUP\Meetings\PC 5-25-23\PC Staff Report 415 Taft SUP - 5-25-23.doc

FULLERTON
NETWORK INTEGRITY STARTS HERE

February 7, 2023

RECEIVED
FEB 10 2023
VILLAGE OF GLEN ELLYN

Village of Glen Ellyn
Community Development Department
535 Duane Street
Glen Ellyn, IL 60137

Re: Application for Special Use Permit to allow the Installation and Operation of New DISH Wireless Network Equipment to the Existing Tower at 415 Taft Ave / DISH Site CHCHI00216A / Crown Site 873681

Dear Zoning Officials,

Fullerton Engineering on behalf of DISH Wireless, and Tower Owner Crown Castle, submit for review and approval, a Special Use Application for the proposed addition of DISH Wireless Antennas and Support Equipment to the tower at the above referenced location. Please note, that the equipment proposed for installation will be able to support 5G technology.

In support of the application, please find the enclosed documentation:

- Special Use Permit Application
- Project Narrative
- 6409A Notice of Eligible Facilities Request
- (3) sets Plat of Survey
- Escrow Check for $1,000
- RF Interference Statement
- (3) sets of Construction Drawings
- (3) sets of Structural Calculations

Please contact me at astouder@fullertonengineering.com or 574-849-8420 if you have questions.

Thank you very much in advance.

Sincerely,

Ariel Stouder

Ariel Stouder
Senior Zoning & Permitting Specialist
Fullerton Engineering
574-849-8420
astouder@fullertonengineering.com

RECEIVED
FEB 10 2023
VILLAGE OF GLEN ELLYN

VILLAGE OF GLEN ELLYN

Special Use Permit Application Packet

Planning & Development Department
535 Duane Street – Glen Ellyn, IL 60137 – Telephone 630.547.5250 – Fax 630.547.5370

SPECIAL USE PERMIT PROCEDURE
OUTLINE

1. Pre-application meeting with Planning and Development Department;
2. Preparation of application packet;
3. Review of packet by Planning and Development Department staff (recommended);
4. Formal application (submission of packets and fee);
5. Notice in newspaper, notice by letter to surrounding property owners, sign on site;
6. Review by Plan Commission at a public hearing;
7. Preparation of public hearing transcripts or minutes;
8. Review by Village Board at workshop;
9. Action by Village Board at meeting;
10. Adoption of ordinance.

SPECIAL USE PERMIT
PROCEDURE

1. **Pre-Application Meeting:** The petitioner should meet with the Village Planner or Director of Planning and Development for a pre-application meeting to informally discuss the proposed Special Use prior to filling out a formal application. At the pre-application meeting, the petitioner should provide general information that describes or outlines the existing conditions of the site and the proposed Special Use. A request to informally discuss the proposed Special Use with the Plan Commission may be made at this time. The Planning and Development Department staff will also review the types of required submittals (see item #2), the number of copies required and the approximate length of review time required by the Village.

   The petitioner is encouraged to become familiar with the appropriate provisions of the Zoning Code.

2. **Required Submittals:** The petitioner shall prepare the following items for submittal to Village staff:

   a. Application: Completed application for Special Use Permit (form attached and associated fee);

   b. Reimbursement of Fees Agreement: Signed agreement consenting to reimburse the Village for out of pocket expenses incurred in processing the application.

   c. Plat of Survey: A current Plat of Survey of the property, prepared by a land surveyor registered with the State of Illinois, with contour lines depicting the existing grade and a statement that the property is or is not in the floodplain;

   d. Site Plan: A plan or plat drawn to scale, including a north arrow, address of the site, name of the preparer and date, showing:

      1. Lot line dimensions and lot area;
      2. Existing or proposed grades with contour intervals not in excess of two feet;
      3. Location of any existing and proposed structures on the lot;
      4. Street locations, right-of-way widths and pavement widths;
      5. Location, width and materials of sidewalks, curb cuts and driveways;
      6. Location and size of any sanitary sewer and water lines or septic systems and wells, location of storm sewers;
      7. Location and width of easements;
      8. Location of parking areas, type of surface, dimension of parking spaces and drive aisles;
      9. Location of loading areas, types of surface, dimensions, striping and signing, type of screening;
      10. On-site traffic access and circulation delineated by directional arrows and signs;
      11. Open spaces;
      12. Location of existing and proposed signs;
      13. Location, height and type of existing and proposed lighting;
      14. Location, size and species of existing and proposed landscaping;

15. Zoning of subject property and adjacent properties;
16. Other data that may be necessary for the review of the application, as determined by the Planning and Development staff;

d. Proof of Ownership: A copy of a Guarantee Title Policy or other proof of ownership as approved by the Planning and Development Department staff;

e. Disclosure of Interest: If the subject property is held in a trust, a complete disclosure of interest of the ownership, including the names of trustees and beneficial owners, shall be provided. If the subject property is owned by a corporation, a disclosure of the shareholders, including the names of the officers and directors, should be provided (form attached);

f. Affidavit of Authorization: A document signed by the owner of the subject property which authorizes the petitioner to represent them for the Special Use request shall be provided (form attached);

g. Narrative Statement: A description of the existing and proposed use(s) of all structures and land. The statement should evaluate the economic effects of the proposed Special Use and the impacts of such elements as noise, glare, odor, fumes, and vibration on adjoining property. The statement should discuss the general compatibility with existing and proposed uses in the general vicinity and with the recommendations of the Comprehensive Plan; and

h. Land Use Opinion: A Land Use Opinion from the Kane DuPage Soil and Water Conservation District Board, if required.

NOTE: Waiver of the required documentary evidence can be granted by the Director of Planning and Development provided staff determines that the information is insignificant or unnecessary.

NOTE: If the plans accompanying the Special Use application are required to be recorded with the DuPage County Recorder of Deeds, the petitioner should have the surveyor sign a Letter of Authorization (form attached) which designates a representative from the Village of Glen Ellyn as the agent to record the plan.

NOTE: The petitioner should be aware that the requirements outlined herein are the minimum requirements for processing an application for Special Use and that, from time to time, the Plan Commission may require such other information that it deems necessary to determine if the proposed Special Use meets the intent and requirements of the Zoning Code.

3. **Preliminary Staff Review:** When the petitioner has plans in substantially completed form, it is recommended that a draft copy of all application documents shall be submitted for preliminary review by the Planning and Development staff. Staff will review the project for compliance with all applicable Village ordinances and will raise any concerns or issues with the proposal. Following review by staff, the petitioner may wish to modify the proposal to respond to staff comments.

4. **Escrow Account for Consultants:** The Village utilizes consultants for engineering, legal and Plan Commission secretarial services. Prior to involving these individuals in the

review of a proposed Special Use Permit, the Village requires a petitioner to establish an escrow account to pay the Village consultant costs. The minimum amount of an escrow account is five hundred dollars ($500). The Director of Planning and Development may set a higher minimum based on an evaluation of the size of the project and likely expenses associated with the review process. Once the escrow account is established, the Village involves its consultants in the review process as necessary. When invoices are received from the consultants, the Village draws on the account. The developer receives a monthly accounting of the invoices and is requested to replenish the escrow account back to the original amount, when the balance is less than five hundred dollars ($500). The escrow account is maintained throughout the review and building processes. Once the project is complete, any remaining funds in the escrow account are returned to the petitioner.

5. **Formal Application:**

   a. Special Use requests require an application fee. Staff will identify the amount of the fee, as determined by the Village Board, at the pre-application meeting. This fee is applied toward project review costs. The fee is payable when formal application is made for a Special Use Permit;

   b. Upon receipt of the required number of copies of all of the items enumerated above and the application fee, the Planning and Development staff shall set a date for a public hearing before the Plan Commission on the application for Special Use Permit. The application must be received a minimum of 21 days in advance of the proposed public hearing date;

   c. Not more than 30 days nor less than 15 days before the public hearing before the Plan Commission, the Planning and Development staff will place a legal notice in The Glen Ellyn News which will describe the petitioner's request, location of the subject property and the time, date, and location of the public hearing. The staff will also mail a notice of the Special Use request to property owners within 250 feet of the subject property and will cause a sign to be placed on the subject property not less than 15 days prior to the public hearing which announces that a public hearing regarding the subject property will be held. The sign shall remain until completion of the public hearing, after which it will be removed. Jurisdiction of the Plan Commission to hold the public hearing shall not be affected by the absence of a sign, if such absence is not the result of the petitioner; and

   d. The Director of Planning and Development, if he/she considers it necessary, may call upon any Village department or official for their review of the proposed Special Use prior to any public hearing. Such review shall be in writing and take no more than ten days.

6. **Staff Review:** The Village Planner or Director of Planning and Development will review the request for compliance with the provisions of the Comprehensive Plan, Zoning Code and other applicable codes. Staff will also visit the subject property. A staff report, which summarizes the request and presents staff concerns, will be prepared and submitted to the Plan Commission. The petitioner will be provided a copy of the staff report and the agenda of the Plan Commission meeting.

7. **Public Hearing:**

a. The Planning and Development staff will submit the application, staff report and any other supporting documents to the Plan Commission to conduct the public hearing thereon. The Plan Commission meets on the second and fourth Thursday of each month, at 7:00 p.m. in the Glen Ellyn Civic Center, 535 Duane Street;

b. The petitioner or his/her representative must attend the public hearing. It is the responsibility of the petitioner to present an argument supporting the request for a Special Use Permit in a complete and logical manner and to have available all evidence necessary to support the request. It is advisable, but not required, for the petitioner to prepare color versions of the plans (site plan, landscaping, building drawings), mounted for presentation purposes;

c. The Plan Commission may make a decision at one meeting or choose to continue the public hearing to another date for a variety of reasons, including but not limited to: additional information is deemed necessary; Plan Commissioners desire an opportunity to visit the site or request staff to conduct further research; or insufficient time remains on the night of the public hearing to conclude the hearing. If the hearing is continued, no additional public notice is required to be published, however the sign remains on the subject property;

d. At the close of the public hearing, the Plan Commission will take a roll call vote on the requested Special Use. The Plan Commission may recommend approval, approval with conditions, or denial. In making its recommendation, the Plan Commission must find that the requested Special Use:

1. Will be harmonious with and in accordance with the general objectives, or within a specific objective of the Comprehensive Plan or the Zoning Code;

2. Will be designed, constructed, operated, and maintained so as to be harmonious and appropriate in appearance with the existing or intended character of the general vicinity and that such use will not change the essential character of the same area;

3. Will not be hazardous or disturbing to existing or future neighborhood uses;

4. Will be served adequately by essential public facilities and services such as highways, streets, police and fire protection, drainage structure, refuse disposal, water, sewers and schools, or that the persons or agencies responsible for the establishment of the proposed Special Use shall be able to provide adequately any such services;

5. Will not create excessive additional requirements at public cost for public facilities and services and will not be detrimental to the economic welfare of the Village;

6. Will not involve uses, activities, processes, materials, equipment or conditions of operation that will be detrimental to any persons, property or

the general welfare by reason of excessive production of traffic, noise, smoke, fumes, glare or odors;

7. Will have vehicular approaches to the property which shall be so designed as not to create an undue interference with traffic on surrounding public streets or roads;

8. Will not increase the potential for flood damage to adjacent property or require additional public expense for flood protection, rescue or relief; and

9. Will not result in destruction, loss or damage of natural, scenic or historic features of major importance to the community.

8. **Final Action:**

a. Within 90 days after the close of the public hearing, the Plan Commission will submit to the Village Board the minutes or transcripts which contain the Commission's recommendations to the Village Board and summarize what occurred at the public hearing, the exhibits presented and the citizens and witnesses heard;

NOTE: Before the Village Board takes final action and votes on the request, the petitioner must have the escrow account balance brought back to the original amount.

b. After receiving the minutes or transcripts and supporting documents, the Village Board will schedule the request on a Village Board agenda. The Village Board meets on the 2nd, 3rd, and 4th Monday of each month. The third Monday is a workshop, and the second and fourth Mondays are formal meetings. There is a pre-board meeting before the formal meeting on the 2nd Monday. At the workshop and pre-board meetings, the Village Board discusses and decides what action will be taken on the agenda items for the formal meeting. The petitioner will be informed by Planning and Development staff at which Village Board workshop or pre-board meeting and formal meeting they are scheduled to be heard. The petitioner or his/her representative must be in attendance at these meetings.

c. The meeting of the Village Board is not a public hearing. The Village Board may decide to approve, approve with conditions, or deny the requested Special Use. Any proposed Special Use that fails to receive the approval of the Plan Commission may be approved by a favorable vote of two-thirds of the Village Board. If a proposed Special Use receives the approval of the Plan Commission, a favorable vote of the majority of the members of the Village Board is sufficient to grant the Special Use. Conditions or restrictions may be required to reduce or minimize injurious effects of Special Uses on other property or to implement the general purpose and intent of the Zoning Code. Action on the requested Special Use will be by an ordinance which is adopted by the Village Board.

d. After the Village Board votes on the petition, Director of Planning and Development, Building and Zoning Official and Director of Public Works are informed of the action. If the decision is to approve the Special Use Permit, the

petitioner may seek building permits after the ordinance has been approved and signed. A building permit must be applied for within 18 months from the date of the ordinance or the Special Use Permit will become null and void. The Planning and Development Department will compare plans submitted for permits to the plans that were approved by the Village Board and any conditions applied to the Special Use Permit.

Questions may be directed to the Village Planner at phone number 630-547-5250.

RECEIVED

FEB 10 2023

VILLAGE OF GLEN ELLYN

APPLICATION FOR SPECIAL USE PERMIT

CLEAR PAGE

The undersigned petitions the President and Village Board of Trustees of the Village of Glen Ellyn, Illinois, to consider the Special Use described in this application.

Date Filed: _____ Application No: _____

Name of Applicant: ARIEL STOUDER - FULLERTON ENGINEERING CONSULTANTS, LLC
OBO CROWN CASTLE USA INC & DISH WIRELESS LLC

Address of Applicant: 1100 E WOODFIELD RD., SUITE 500, SCHAUMBURG, IL 60173

Business Phone: 574-849-8420 Fax: N/A

Home Phone: N/A Mobile Phone: 574-849-8420

Email: astouder@fullertonengineering.com

Property Interest of Applicant: AGENT FOR CROWN CASTLE USA INC / DISH WIRELESS LLC

(Owner, Contract Purchaser, Owner Representative)

Name of Owner: THOMAS L & J VAN WINKLE

Address of Owner: 415 TAFT AVENUE, GLEN ELLYN, IL 60137

Business Phone: _____ Fax: _____

Home Phone: _____ Mobile Phone: _____

Email: _____

Property Address: 415 TAFT AVENUE, GLEN ELLYN, IL 60137

Legal Description of Property:

THE SOUTH 29.92 FEET OF LOT 9 AND THE SOUTH 29.92 FEET OF THE WEST 1/2 OF VACATED ALLEY LYING EAST OF AND ADJOINING SAID LOT 9 AND THE SOUTH 29.92 FEET OF LOT 10 BLOCK 79 IN WHEATON ESTATES, BEING A SUBDIVISION IN SECTION 22 AND SECTION 23, TOWNSHIP 39 NORTH, RANGE 10, EAST OF THE THIRD PRINCIPAL MERIDIAN, ACCORDING TO THE PLAT THEREOF RECORDED AUGUST, 1925 AS DOCUMENT 197514 IN DUPAGE COUNTY, ILLINOIS.

Permanent Index No. (PIN): 0523102018 Zoning: C-4 OFFICE DISTRICT

Lot Dimensions: 117'X132'X117X132' Lot Area: .35 ACRES

Present Use:

WIRELESS FACILITIES & COMMERCIAL SPACE

Requested Use/Construction:

NO CHANGE IN USE

Estimated Date to Begin New Use/Construction: TBD

Name(s), Address(es) and Phone No(s). of Experts (architects, engineers, etc.): CLEAR PAGE

SITE DESIGNER:
CHRISTOPHER J. WARREN P.E.
INFINIGY
2500 W. HIGGINS RD. SUITE 500
HOFFMAN ESTATES, IL 60169
847-648-4068

Narrative Statement evaluating the economic effects on adjoining property, the effect of such elements as noise, glare, odor, fumes and vibration on adjoining property, a discussion of the general compatibility with the adjacent and other properties in the district, the effect of traffic, and the relationship of the proposed use to the Comprehensive Plan, and how it fulfills the requirements of paragraph (E) of Section 10-10-14 of the Zoning Code:

The proposed addition of new DISH Wireless antennas and ground equipment to the existing Wireless Facility is considered a Minor Modification and a preferred siting option for new wireless equipment. There will be no noise, glare, odor, fumes, or vibration that might effect adjoining properties. It will be unmanned and have no effect on traffic.
Responses to Paragraph E Section 10-10-14 of Zoning Code below.

Describe How the Special Use:

1. Will be harmonious with and in accordance with the general objectives, or within a specific objective of the Comprehensive Plan and/or this Zoning Code:

Wireless Communications have been designated Critical Infrastructure by the Federal Government and should be considered Essential Services in all Comprehensive Plans. Installation of a New Carrier to an existing wireless support structure in a commercial district would be preferable to construction of a new tower.

2. Will be designed, constructed, operated, and maintained so as to be harmonious and appropriate in appearance with the existing or intended character of the general vicinity and that such use will not change the essential character of the same area:

The proposed addition of DISH Wireless antennas to an existing support structure without adding to the height of the structure, along with the addition of the proposed DISH Wireless ground support equipment within an existing equipment compound, behind a commercial building adjacent to a golf course, will not change the character and be harmonious.

3. Will not be hazardous or disturbing to existing or future neighborhood uses:

The proposed addition of the DISH Wireless equipment will not be hazardous or disturb future uses.

CLEAR PAGE

4. Will be served adequately by essential public facilities and services such as highways, streets, police and fire protection, drainage structures, refuse disposal, water, sewers and schools, or that the persons or agencies responsible for the establishment of the proposed use shall be able to provide adequately any such services:

The proposed use will be unmanned and only require Power and Fiber connections that are already existing at the site. No other public services will be required or impacted.

5. Will not create excessive additional requirements at public cost for public facilities and services, and will not be detrimental to the economic welfare of the Village:

As mentioned above, this will be an unmanned facility and will not be detrimental to the economic welfare of the Village.

6. Will not involve uses, activities, processes, materials, equipment and/or conditions of operation that will be detrimental to any persons, property or the general welfare by reason of excessive production of traffic, noise, smoke, fumes, glare or odors:

The proposed use will not be detrimental to any persons, property, or general welfare and will not create traffic, noise, smoke, fumes, glare, or odors.

7. Will have vehicular approaches to the property, which shall be so designed as not to create an undue interference with traffic on surrounding public streets or roads:

The proposed use will be unmanned and not create interference to traffic. It will be serviced via an existing driveway by a single technician approximately once a month.

8. Will not increase the potential for flood damage to adjacent property or require additional public expense for flood protection, rescue or relief:

The proposed use will not change the topography of the site or create any measurable run off. There will be absolutely zero increase in the potential for flooding.

9. Will not result in destruction, loss or damage of natural, scenic or historic features of major importance to the community:

The proposed addition of the DISH Wireless equipment to an existing support structure within an existing equipment compound in an Office District, behind a store, adjacent to a golf course, will not result in destruction, loss, or damage of natural, scenic or historic features of major importance to the community.

CLEAR PAGE

I (We) certify that all of the statements and documents submitted as part of this application are true to the best of my (our) knowledge and belief.

I (We) consent to the entry in or upon the premises described in this application by any authorized official of the Village of Glen Ellyn for the purpose of inspection.

I (We) consent to pay the Village of Glen Ellyn all costs incurred for transcribing the public hearing on this application.

I (We) understand that no final action shall be taken by the Village Board subsequent to the public hearing until and upon payment of transcribing fees.

2/7/2023	ARIEL STOUDER - FULLERTON ENGINEERING	
Date	Print Name	Signature of Applicant
Date	Print Name	Signature of Applicant
Date	Print Name	Signature of Applicant

THE BEST INTERESTS OF THE APPLICANT WILL BE SERVED BY COMPLETING THIS APPLICATION IN DETAIL

OWNERSHIP BY A CORPORATION

CLEAR PAGE

Date: _____

Address: 415 TAFT AVE, GLEN ELLYN, IL 60137

Legal Description:

LIST ALL SHAREHOLDERS AND OFFICERS/DIRECTORS (AND % OF INTEREST OWNED IN EXCESS OF 5% OF STOCK)

Name: _____ Address: _____ %_____

Name: _____ Address: _____ %_____

Name: _____ Address: _____ %_____

Name: _____ Address: _____ %_____

Name: _____ Address: _____ %_____

Name: _____ Address: _____ %_____

Name: _____ Address: _____ %_____

Name: _____ Address: _____ %_____

Name: _____ Address: _____ %_____

Name: _____ Address: _____ %_____

Name: _____ Address: _____ %_____

Name: _____ Address: _____ %_____

Name: _____ Address: _____ %_____

Name: _____ Address: _____ %_____

Name: _____ Address: _____ %_____

Name: _____ Address: _____ %_____

Name: _____ Address: _____ %_____

AFFIDAVIT OF AUTHORIZATION

CLEAR PAGE

I, _____ owner of the property described as

514 TAFT AVE, GLEN ELLYN, IL 60137

verify that **FULLERTON ENGINEERING CONSULTANTS, LLC**

is duly authorized to apply and represent my interests before the Glen Ellyn Plan Commission, Zoning Board of Appeals, and/or Village Board of Trustees. Owner acknowledges that any notice given applicant is actual notice to owner.

_____
OWNER SIGNATURE

Subscribed and sworn to before me this

_____ day of _____, 20_____

_____

Notary Public

111 East Wacker Drive, Suite 2600
Chicago, IL 60601-4208
Tel: 312.527.4000 | Fax: 312.527.4011
taftlaw.com

Karl D. Camillucci
312.836.4085
kcamillucci@taftlaw.com

May 15, 2023

VIA E-MAIL

Plan Commission
Village of Glen Ellyn
535 Duane Street
Glen Ellyn, IL 60137

Re: Eligible Facilities Requests under Section 6409(a) of the United States Spectrum Act: 1102 Hill Avenue and 415 Taft Avenue.

Dear Members of the Plan Commission:

Our firm represents Crown Castle USA Inc. (the "**Company**") in connection with the above-referenced eligible facilities requests to modify existing towers (collectively, the "**Requests**") submitted to the Village of Glen Ellyn (the "**Village**") by the Company pursuant to Section 6409(a) of the United States Middle Class Tax Relief and Job Creation Act of 2012[1] and its regulations (collectively, the "**Spectrum Act**"). The Village's Plan Commission (the "**Commission**") held public hearings about the Requests on April 27, 2023. At that meeting, the Commission requested additional analysis regarding the Village's legal authority to review the Requests. Specifically, the Commission asked:

1. Does the Spectrum Act require approval of the Requests?; and

2. May the Village consider property values in connection with its action on the Requests?

Under the facts presented by the Requests, the short answers are:

1. Yes, the Spectrum Act requires approval of the Requests; and

2. No, the Village may not consider property values in connection with its action on the Requests.

[1] Codified as 47 U.S.C. § 1455(a).

As requested by the Commission, this letter further discusses the Village's legal authority to act upon the Requests. Although the Spectrum Act limits the formal scope of the Village's review and requires approval of the Requests under the applicable facts, the Company believes strongly in working cooperatively with the Village to address the Village's comments and questions. Indeed, the Company first filed an application with the Village with respect to1102 Hill Avenue more than one year ago, in April of 2022. Since that time, the Company has worked in good faith with Village staff to provide requested information and respond to the Village's comments and questions, notwithstanding that the Spectrum Act provides for a 60-day "shot clock" for action on eligible facilities requests. The Company appreciates the dialogue it has had with the Village and looks forward to continuing its collaborative and constructive relationship with the Village.

1. Section 6409(a)(1) of the Spectrum Act Requires Approval of the Requests.

a. The Spectrum Act Preempts the Village's Authority.

The Spectrum Act states that the Village "may not deny, and shall approve any eligible facilities request for a modification of an existing wireless tower . . . that does not substantially change the physical dimensions of such tower." [2] The Federal Communications Commission (the "**FCC**") has determined that the provisions of the Spectrum Act "preempt [state and local authorities] from choosing to exercise [their] authority [to review wireless facilities siting applications] under their laws other than in accordance with Federal law – *i.e.*, to deny any covered requests." *In re: Acceleration of Broadband Deployment by Improving Wireless Facilities Siting Policies*, 80 FR 1238-01 at 1256, ¶ 106 (2015). Federal courts agree: "[t]he [Spectrum] Act preempts local regulation of collocations and bars states from denying facility modification applications that meet certain standards." *Montgomery County, Md. v. F.C.C.*, 811 F.3rd 121, 128-129, January 8, 2015.

b. The Village Must Approve the Requests Because They Satisfy the Requirements of the Spectrum Act.

The Village must approve the Requests because the proposed modifications would satisfy the requirements of the Spectrum Act. The Spectrum Act requires approval of an eligible facilities request that satisfies all of the following standards (collectively, the "**Spectrum Act Standards**"):

[2] Section 1.b. of this letter discusses how the Spectrum Act defines modifications that would not substantially change the physical dimensions of an existing tower and, therefore, may not be denied and must be approved.

i. The request proposes to install transmission equipment on an existing tower (*see,* 47 C.F.R. §§ 1.6100(b)(2) – 1.6100(b)(4)); and

ii. The installation would not "substantially change" the physical dimensions of the existing tower (47 C.F.R. §§ 1.6100(b)(3)). An installation does not substantially change the physical dimensions of the existing tower if it:

A. Would not increase the height of the tower by the greater of either 10% of the tower height or the height of an additional antenna array plus up to 20 feet of separation from the closest existing antenna array;

B. Would not add an appurtenance to the tower that protrudes from the edge of the tower by the greater of either more than 20 feet or the width of the tower structure at the level of the appurtenance;

C. Would not result in the installation of more than the standard number of equipment cabinets, not to exceed four cabinets;

D. Would not result in excavation outside of the site boundaries by more than 30 feet in any direction;

E. Would not defeat any concealment element of the tower; or

F. Would comply with conditions of the siting approval for the construction of the tower (provided, however, that noncompliance with such conditions does *not* cause a substantial change to the existing tower if the request would be non-compliant in a manner that does not exceed the height, width, cabinet, and excavation thresholds described in (i) through (iv) above).

47 C.F.R. § 1.6100(b)(7).

The engineering plans, narrative descriptions of the proposed modifications, and Spectrum Act checklists, and other materials submitted to the Village by the Company show that the Requests satisfy all of the Spectrum Act Standards. The Village's consultant concurs that the Requests satisfy all of the Spectrum Act Standards, and no party has suggested otherwise. Under the Spectrum Act, therefore, the Village may not deny and must approve the Requests.

c. The Requests Are Eligible Facilities Requests Submitted Pursuant to the Spectrum Act, Not Special Use Permit Applications Submitted Pursuant to the Village's Zoning Ordinance.

The Requests are "eligible facilities requests" made pursuant to the Spectrum Act, not special use permit applications filed pursuant to the Village's zoning ordinance. The FCC has determined that municipalities may require parties who make an eligible facilities request under the Spectrum Act to file an application for the purpose of determining whether the request satisfies the Spectrum Act Standards. *In re: Acceleration of Broadband Deployment*, 80 FR 1238-01 at 1256, ¶ 103. Nevertheless, many municipalities have not adopted application procedures specifically designed to approve eligible facilities requests made pursuant to the Spectrum Act. *In the Matter of Implementation of State and Local Governments' Obligation to Approve Certain Wireless Facility Modification Requests Under Section 6409(A) of the Spectrum Act of 2012*, 35 FCC Rcd. 5977, 5985 ¶ 15 (F.C.C.), June 9, 2020. In those cases, the FCC acknowledges that municipalities may use "authorizations under the local government's standard zoning or siting rules" to approve eligible facilities requests. *Id.* at 5988, ¶ 21. The Village has not developed a specific application form or application process designed for the review and approval of eligible facilities requests under the Spectrum Act. Notwithstanding that the Village has reviewed the Requests using its process for reviewing special use permits, the Requests remain eligible facilities requests under the Spectrum Act.

As such, the scope of the Village's review is confined solely to the requirements of the Spectrum Act. In particular, and as further discussed below, the Village must: (i) limit the substantive scope of its review to determining whether the proposed modifications set forth in the Requests satisfy the Spectrum Act Standards; and (ii) comply with the Spectrum Act's 60-day "shot clock" for granting eligible facilities requests, after the expiration of which a request that satisfies the Spectrum Act Standards is "deemed granted" under the Spectrum Act. *See Id*.; *In re: Acceleration of Broadband Deployment*, 80 FR 1238-01 at 1256-1257, ¶¶ 103-114.

d. The Village Must Consider Only Whether the Requests Satisfy the Spectrum Act Standards.

Whatever approval process the Village uses, "State and local governments may only require applicants to provide documentation that is reasonably related to determining whether the request meets the requirements of [6409(a)]" (*i.e.* whether a proposed modification would satisfy the Spectrum Act Standards). *In re: Acceleration of Broadband Deployment*, 80 FR 1238-01 at 1256, ¶ 107 (underlining added). The Village may not require information unrelated to whether the proposed modification would satisfy the

Spectrum Act Standards, including "documentation proving the need for the proposed modification or presenting the business case for it." *Id.*

The Company has already submitted to the Village sufficient information for the Village to determine that the Requests satisfy the Spectrum Act Standards (*see, e.g.*, cover letters from the Company, engineering plans, and checklists showing that the Requests satisfy the Spectrum Act Standards). Requests for other information, including, without limitation, information related to property values and radiofrequency emissions, are not reasonably related to determining whether the Requests would substantially change the physical dimensions of the existing towers. The Spectrum Act prohibits the Village from seeking such information from the Company in connection with the Requests.

e. The Requests Are Subject to the Spectrum Act's "Shot Clock."

The Village's review of the Requests is subject to the 60-day "shot clock" for the approval of eligible facilities requests under the Spectrum Act. If a request that satisfies the Substantial Change Standards "has not been approved by a State or local government within 60 days from the date of filing . . . the reviewing authority will have violated section 6409(a)'s mandate to approve and not deny the request, and the request will be deemed granted." *Id.* at 1257, ¶ 110. The "shot clock" may be tolled by mutual agreement or if a municipality sends a written notice within thirty (30) days after submission of the request that the initial request was incomplete, but the "municipality may only specify as missing information and supporting documents that are reasonably related to determining whether the request meets the requirements of section 6409(a)." *Id.* A municipality "may not delay the start of the shot clock by requiring an applicant to submit documentation that is not reasonably related to determining whether the proposed modification is an eligible facilities request." *In the Matter of Implementation of State and Local Governments' Obligation to Approve Certain Wireless Facility Modification Requests*, 35 FCC Rcd. at 5988, ¶ 20. In addition, if a municipality uses a special use permit or other standard zoning or siting approval in connection with consideration of an eligible facilities request under the Spectrum Act, the "requirements to obtain such authorizations may not be used by the local government to delay the start of or to toll the shot clock under the Section 6409(a) process." *Id.* at 5988, ¶ 21.

The Village deemed the Company's Request with respect to 1102 Hill Avenue complete on November 2, 2022. The 60-day "shot clock" applicable to that Request expired no later than January 1, 2023. The Company's Request with respect to 415 Taft was filed on February 13, 2023 and the fees were paid March 15, 2023. The 60-day "shot clock" applicable to that Request will expire, at the latest, on May 15, 2023.[3]

[3] Under the Spectrum Act, after the expiration of the applicable "shot clocks" the Company has the right to send notice to the Village that the Requests are "deemed granted."

2. The Village May Not Consider Property Values.

Certain members of the Commission asked whether, in connection with their review of the Requests, they have the legal authority to consider the possibility that public perception of radio frequency emissions from wireless telecommunication facilities could depress property values in the Village. The Spectrum Act and the Telecommunications Act of 1996 (the "**Telecommunications Act**") both prohibit the Village from considering the effect of radio frequency emissions on property values as part of the Village's review of the Requests.

a. The Spectrum Act Prohibits Consideration of Property Values and Radio Frequency Emissions.

The Spectrum Act prohibits the Village from considering property values and radio frequency emissions in connection with its review of the Requests. As discussed in Section 1.d. of this letter, under the Spectrum Act the Village must only consider information reasonably related to whether the Requests satisfy the Spectrum Act Standards. The effect, if any, of the Requests on property values is not reasonably related to whether the Requests satisfy the Spectrum Act Standards. Similarly, matters related to radio frequency emissions are not reasonably related to whether the Requests satisfy the Spectrum Act Standards. Under the Spectrum Act, therefore, the Village may not consider property values or radio frequency emissions in connection with its review of the Requests.

b. The Telecommunications Act Prohibits Consideration of Radio Frequency Emissions.

Further, the Telecommunications Act prohibits the Village from denying the Requests on the basis of issues related to radio frequency emissions. The Telecommunications Act states, among other things, that the "regulation of the placement, construction, and modification of personal wireless services facilities" by units of local government may not be done "on the basis of the environmental effects of radio frequency emissions to the extent that such facilities comply with [FCC] regulations concerning such emissions." 47 U.S.C. § 332(c)(7)(B). The Company has submitted documentation to the Village demonstrating that the facilities will comply with FCC regulations concerning radio frequency emissions. To the extent that the Commission's concerns regarding property values are based on concerns regarding radio frequency emissions, the Telecommunications Act prohibits the consideration of radio frequency emissions and, therefore, property values.

3. Even if the Village Had Legal Authority to Consider Property Values, the Requests Would Not Materially Affect Property Values.

For the reasons set forth in Section 2 of this letter, the Village lacks legal authority to consider property values in its review of the Requests. For the sake of argument, however, even if the Village had legal authority to consider the effect of the Requests on property values, the record supports finding that the Requests would not have a material effect on property values in the Village.

The record includes sworn testimony to the effect that many factors contribute to the value of real property, and the effect of any single factor cannot be determined with a high degree of certainty. Macroeconomic factors such as interest rates, inflation, and the strength of the overall economy can cause property values to rise or fall, irrespective of local factors. At the same time, many location-specific factors may play a role in each property's value, such as the property's location, size, use, appearance, improvements, condition, and cash flow. Isolating the influence of any particular factor on a property's overall value is infeasible.

Nevertheless, the record supports finding that the modifications described in the Requests will not materially affect property values in the Village because the presence of the existing towers on 1102 Hill Avenue and 415 Taft Avenue is already "priced in" to property values. Both properties are improved with existing towers. Both towers historically have been improved with antennas and related wireless facilities. 415 Taft Avenue currently is improved with antennas and related wireless facilities. Other existing towers and wireless facilities are located near 1102 Hill Avenue. Towers and antennas are already part of the built environment and aesthetic landscape in the areas surrounding the properties. Modifying the existing towers to include additional antennas will not change the improvements, use, appearance, or condition of the properties in a manner that would have a discernible impact on property values.

Moreover, the record shows that both properties are located in areas where wireless towers and facilities are consistent with the uses, improvements, and appearance of surrounding properties. 1102 Hill Avenue is surrounded by railroad right-of-way, industrial buildings, warehousing and distribution facilities, and other existing wireless and radio towers. 415 Taft Avenue is improved with a sign fabrication business and is located adjacent to vacant lots, a golf course, and a commercial corridor consisting primarily of fast-casual restaurants, commercial office buildings, and similar uses. Neither area has features of significant historical or aesthetic significance. The presence of wireless towers and antennas in those areas will not interfere with the development, use, and enjoyment of the surrounding properties, materially alter the appearance of the area, or otherwise affect the value of nearby properties.

Although the record includes speculative testimony about property values from a small but vocal group of lay people who oppose the Requests, that testimony does not support finding that the Requests, if granted, would reduce property values in the Village. Those witnesses are not qualified to testify about property values. Their testimony is based on unverifiable anecdotes and unfounded beliefs regarding radio frequency emissions that the Village lacks legal authority to consider and is outweighed by other evidence in the record, discussed above.

In addition, their testimony is contradicted by comments made by members of the Commission. Commissioner Dawson disagreed that approval of the Requests could depress property values within the Village, stating that actions to enhance wireless networks, such as approval of the Requests, are critical to making the Village a desirable place to live and work and could improve property values. Any action that might reduce the quality of wireless service in the Village, such as denial of the Requests, could lower demand for properties in the Village and reduce property values. Similarly, Chair Loftus stated that wireless telecommunication facilities are essential infrastructure, similar to streets, sewers, and utilities. The absence or obsolescence of such infrastructure could limit residents' ability to use products and services that rely on wireless technology.

Although the Commission does not have legal authority to consider the effect of the Requests on property values, the record shows that approval of the Requests would not have a material effect on property values in the Village. To be sure, the record does not support finding that the Requests, if granted, would materially reduce property values in the Village. If anything, to many people the presence of high-quality wireless infrastructure in the Village may enhance the desirability of the Village as a place to live and work and improve property values.

4. The Telecommunications Act of 1996 Prohibits Discrimination Against Providers of Substantially Equivalent Services.

Another provision of the Telecommunications Act is also relevant to the Village's legal authority with respect to the Requests. The Telecommunications Act states that “regulation of the placement, construction, and modification of personal wireless services facilities” by municipalities may not "unreasonably discriminate among providers of functionally equivalent services.” *Id.* Wireless carriers other than Dish currently provide wireless telecommunication services, including 5G services, within the Village. The proposed modifications to the existing towers at 1102 Hill Avenue and 415 Taft Avenue would provide substantially equivalent services to other carriers' facilities already in existence within the Village. Disapproval of the Requests would, therefore, unreasonably discriminate against Dish in favor of existing wireless carriers operating in the Village, in violation of the Telecommunications Act.

We hope that the analysis and information in this letter is helpful to the Commission in its review of the Requests. The Company looks forward to concluding the Village's review and receiving a recommendation of approval of the Requests at the next meeting of the Commission on May 25, 2023.

Sincerely,

Taft Stettinius & Hollister LLP

Karl D. Camillucci

KDC

(DRAFT) FINDINGS OF FACT TO SUPPORT A MOTION TO RECOMMEND APPROVAL OF A SPECIAL USE PERMIT TO ALLOW AN ADDITION OF DISH WIRELESS 5G CAPABLE ANTENNAS AND SUPPORT EQUIPMENT TO THE EXISTING CELLULAR TOWER AT 1102 HILL AVENUE

(Draft reasons, taken partially from the petitioner's application packet, as to how the project may comply with the necessary findings have been drafted by Staff; the Commission may wish to consider the findings but should feel free to amend the below reasons to make your own findings of fact based upon information provided at the public hearing).

1. The proposed use will be harmonious and in accordance with the general objectives, or within a specific objective of the Comprehensive Plan and/or Zoning Code, because the cellular tower is existing and is a compatible use within the Light Industrial District in which it's located. Wireless communications including 5G have been designated critical infrastructure by the federal government and the expansion of a new carrier to an existing wireless support structure supports this.

2. The proposed use will be designed, constructed, operated, and maintained so as to be harmonious and appropriate in appearance with the existing or intended character of the general vicinity and that such use will not change the essential character of the same area because the DISH Wireless antennas construction will be consistent with the existing cellular tower at the site and therefore will remain harmonious and appropriate with the existing character of the vicinity. DISH Wireless's antennas and ground equipment will not increase the height or footprint of the existing structure.

3. The proposed use will not be hazardous or disturbing to existing or future neighborhood uses of the property because the addition will be similar to the carriers previously operating at the site. The location of the existing tower also provides the adequate buffer from surrounding neighborhood uses and therefore poses no hazard or disturbance. The installation of the new DISH Wireless will comply with all applicable Building and Electrical Codes. The DISH Wireless and 5G technologies will also meet all the FCC rules regarding interference to other radio services and human exposure to radio frequency energy.

4. The proposed use will be served adequately by existing public facilities and services such as highways, streets, police, fire protection, drainage structure, refuse disposal, water, sewers and schools because as constructed the existing tower is currently covered by local emergency services and does not require any sewer, water, refuse disposal or school services. The expansion will change neither the nature of this facility nor its public services requirements.

5. The proposed use will not create excessive additional requirements at public cost for public facilities and services and will not be detrimental to the economic welfare of the Village because as noted in the above response, this proposal will not significantly change the use and nature of the existing tower and therefore will not create excessive additional requirements at a public cost. The new 5G technologies will meet all the FCC rules regarding interference to other radio services and human exposure to radio frequency energy.

6. The use will not involve activities, processes, materials, equipment and/or conditions of operation that will be detrimental to any persons, property or the general welfare by reason of excessive production of traffic, noise, smoke, fumes, glare and odors because the facility and new Wireless DISH with 5G will not generate any noise, smoke, fumes, glare, or odors and all FCC rules and regulations will be met. It will generate nominal traffic for scheduled maintenance visits.

7. The development will have vehicular approaches to the property, which shall be so designed as not to create an undue interference with traffic on surrounding public streets or roads because the existing cellular tower is and will continue to be unmanned and will be serviced via the existing driveway by a single technician approximately once a month.

8. The development will not increase the potential for flood damage to adjacent property or require additional pubic expense for flood protection, rescue or relief because the expansion of equipment will not change footprint which will pose no increase in potential for flood damage to adjacent property. Nor will it require additional public expenses for flood protection, rescue or relief.

9. The development will not result in destruction, loss or damage of natural, scenic or historic features of major importance to the community because there are no major changes proposed to the structure or the site that would cause any damage to the character, environment, or community resources. As part of installation of 5G technology, all FCC requirements will be met.

(DRAFT) MOTION TO RECOMMEND APPROVAL OF A SPECIAL USE PERMIT TO ALLOW AN ADDITION OF DISH WIRELESS ANTENNAS 5G CAPABLE AND SUPPORT EQIPMENT TO THE EXISTING CELLULAR TOWER AT 1102 HILL AVE.

After conducting a public hearing and deliberating on the request of the petitioner, Tony Phillips of Fullerton Engineers Consultants LLC, on behalf of Crown Castle USA Inc. and DISH Wireless LLC, for approval of a Special Use Permit to allow an addition of DISH Wireless antennas 5G capable and support equipment to the existing cellular tower at 1102 Hill Avenue in the I1 Light Industrial District, the Plan Commission hereby recommends approval based on the findings of fact, as discussed or amended at the Plan Commission meeting held on May 25, 2023, which are hereby incorporated into the Motion by reference as though fully set forth herein, and a copy of which will be attached to the minutes of this meeting and kept on file as part of the permanent records of the Village. The Plan Commission makes this recommendation of approval with the following conditions:

1. That the new DISH Wireless antenna with 5G technology added to the existing cellular tower be operated in substantial conformance with the plans and testimony presented at the Plan Commission public hearing and before the Village Board of Trustees.

Motion by: _____ Seconded by: _____

RECEIVED

FEB 10 2023

VILLAGE OF GLEN ELLYN

Date: **August 30, 2021**

CROWN CASTLE

Crown Castle
2000 Corporate Drive
Canonsburg, PA 15317
(724) 416-2000

Subject:	**Structural Analysis Report**	
Carrier Designation:	***DISH Network* Co-Locate**	
	Site Number:	CHCHI00216A
	Site Name:	IL-CCI-T-873681
Crown Castle Designation:	**BU Number:**	873681
	Site Name:	Chicago
	JDE Job Number:	658426
	Work Order Number:	2012805
	Order Number:	559909 Rev. 2
Engineering Firm Designation:	**Crown Castle Project Number:**	2012805
Site Data:	**415 Taft Ave, Glen Ellyn, DuPage County, IL**	
	Latitude *41° 51' 29.32"*, Longitude *-88° 4' 18.23"*	
	172 Foot - Self Support Tower	

Crown Castle is pleased to submit this **"Structural Analysis Report"** to determine the structural integrity of the above-mentioned tower.

The purpose of the analysis is to determine acceptability of the tower stress level. Based on our analysis we have determined the tower stress level for the structure and foundation, under the following load case, to be:

LC7: Proposed Equipment Configuration **Sufficient Capacity**

This analysis utilizes a 3-second gust wind speed of 90 mph (converted to an equivalent 116 mph ultimate wind speed) as required by the 2009 International Building Code. Applicable Standard references and design criteria are listed in Section 2 - "Analysis Criteria".

Structural analysis prepared by: Randall Ashworth, EIT

Respectfully submitted by:

LICENSED STRUCTURAL ENGINEER
SAIJUN ZHOU
081-008330
STATE OF ILLINOIS

Saijun Zhou 09/02/21

Saijun Zhou, P.E., S.E.
Senior Project Engineer

License expires on: 11/30/22

tnxTower Report - version 8.1.1.0

TABLE OF CONTENTS

1) INTRODUCTION

2) ANALYSIS CRITERIA
Table 1 - Proposed Equipment Configuration
Table 2 - Other Considered Equipment

3) ANALYSIS PROCEDURE
Table 3 - Documents Provided
3.1) Analysis Method
3.2) Assumptions

4) ANALYSIS RESULTS
Table 4 - Section Capacity (Summary)
Table 5 - Tower Component Stresses vs. Capacity - LC7
4.1) Recommendations

5) APPENDIX A
tnxTower Output

6) APPENDIX B
Base Level Drawing

7) APPENDIX C
Additional Calculations

1) INTRODUCTION

This tower is a 172 ft Self Support tower mapped by FDH, Inc. The tower has been modified multiple times to accommodate additional loading.

2) ANALYSIS CRITERIA

TIA-222 Revision:	TIA-222-H
Risk Category:	II
Wind Speed:	116 mph
Exposure Category:	C
Topographic Factor:	1
Ice Thickness:	1.5 in
Wind Speed with Ice:	40 mph
Service Wind Speed:	60 mph

Table 1 - Proposed Equipment Configuration

Mounting Level (ft)	Center Line Elevation (ft)	Number of Antennas	Antenna Manufacturer	Antenna Model	Number of Feed Lines	Feed Line Size (in)
126.0	126.0	3	fujitsu	TA08025-B604	1	1-3/4
		3	fujitsu	TA08025-B605		
		3	jma wireless	MX08FRO665-21 w/ Mount Pipe		
		1	raycap	RDIDC-9181-PF-48		
		1	tower mounts	Commscope MTC3975083 (3)		

Table 2 - Other Considered Equipment

Mounting Level (ft)	Center Line Elevation (ft)	Number of Antennas	Antenna Manufacturer	Antenna Model	Number of Feed Lines	Feed Line Size (in)
160.0	160.0	2	allgon	7200.01 w/ Mount Pipe	4	1-5/8
		6	allgon	7200.09 w/ Mount Pipe		
		6	miscl	1-5/8"x1-5/8" Unistrut (12-ft Horizontal)		
135.0	137.0	3	vzw	Sub6 Antenna w/ Mount Pipe	12 3	7/8 1-1/4
	136.0	9	andrew	SBNHH-1D65C w/ Mount Pipe		
	135.0	3	site pro 1	VFA12-RRU Sector Mount		
		3	ericsson	4449		
		3	ericsson	8843		
		3	raycap	RC3DC-3315-PF-48		
		3	tower mounts	(1) Site Pro 1 VFA12-RRU Sector Mount		
120.0	120.0	1	andrew	VHLP1-220	-	-
		1	nec corporation	NLITE 155 ODU		
		1	tower mounts	Pipe Mount [PM601-1]		
115.0	117.0	3	samsung telecommunications	RRH-C2A W/ EXT FILTER_CCIV2	3	7/8
	116.0	3	kmw communications	ET-X-TS-70-15-62-18-IR-RD w/ Mount Pipe		

Mounting Level (ft)	Center Line Elevation (ft)	Number of Antennas	Antenna Manufacturer	Antenna Model	Number of Feed Lines	Feed Line Size (in)
	115.0	3	samsung telecommunications	RRH-P4 Ph1		
		1	tower mounts	Sector Mount [SM 411-3]		

3) ANALYSIS PROCEDURE

Table 3 - Documents Provided

Document	Reference	Source
4-GEOTECHNICAL REPORTS	1397350	CCISITES
4-POST-MODIFICATION INSPECTION	8125749	CCISITES
4-POST-MODIFICATION INSPECTION	6000632	CCISITES
4-POST-MODIFICATION INSPECTION	5384978	CCISITES
4-POST-MODIFICATION INSPECTION	3112920	CCISITES
4-TOWER FOUNDATION DRAWINGS/DESIGN/SPECS	5978753	CCISITES
4-TOWER FOUNDATION DRAWINGS/DESIGN/SPECS	1639581	CCISITES
4-TOWER MANUFACTURER DRAWINGS	1640593	CCISITES
4-TOWER REINFORCEMENT DESIGN/DRAWINGS/DATA	8130286	CCISITES
4-TOWER REINFORCEMENT DESIGN/DRAWINGS/DATA	3129902	CCISITES
4-TOWER REINFORCEMENT DESIGN/DRAWINGS/DATA	2945765	CCISITES
4-TOWER REINFORCEMENT DESIGN/DRAWINGS/DATA	1404690	CCISITES
4-TOWER REINFORCEMENT DESIGN/DRAWINGS/DATA	5245551	CCISITES

3.1) Analysis Method

tnxTower (version 8.1.1.0), a commercially available analysis software package, was used to create a three-dimensional model of the tower and calculate member stresses for various loading cases. Selected output from the analysis is included in Appendix A. When applicable, Crown Castle has calculated and provided the effective area for panel antennas using approved methods following the intent of the TIA-222 standard.

tnxTower was used to determine the loads on the modified structure. Additional calculations were performed to determine the stresses in the reinforced leg sections. These calculations are presented in Appendix C.

3.2) Assumptions

1) Tower and structures were maintained in accordance with the TIA-222 Standard.
2) The configuration of antennas, transmission cables, mounts and other appurtenances are as specified in Tables 1 and 2 and the referenced drawings.

This analysis may be affected if any assumptions are not valid or have been made in error. Crown Castle should be notified to determine the effect on the structural integrity of the tower.

4) ANALYSIS RESULTS

Table 4 - Section Capacity (Summary)

Section No.	Elevation (ft)	Component Type	Size	Critical Element	P (K)	SF*P_allow (K)	% Capacity	Pass / Fail
T1	172 - 160	Leg	ROHN 2 STD	1	-0.82	38.68	2.1	Pass
T2	160 - 140	Leg	ROHN 2 STD	25	-9.24	38.68	23.9	Pass
T3	140 - 136	Leg	ROHN 2.5 EH	58	-11.50	87.41	13.2	Pass
T4	136 - 132	Leg	ROHN 2.5 EH	67	-16.26	87.41	18.6	Pass
T5	132 - 128	Leg	ROHN 2.5 EH	76	-21.27	87.41	24.3	Pass
T6	128 - 124	Leg	ROHN 2.5 EH	85	-27.58	87.41	31.5	Pass
T7	124 - 120	Leg	ROHN 2.5 EH	94	-34.14	87.41	39.1	Pass
T8	120 - 115	Leg	ROHN 3 STD	103	-40.60	86.63	46.9	Pass
T9	115 - 110	Leg	ROHN 3 STD	114	-48.32	99.95	48.3	Pass
T10	110 - 105	Leg	P 3.5in x 0.216in w/ 1/2HSS 4.5in x 0.337in	126	-55.79	159.57	35.0	Pass
T11	105 - 100	Leg	P 3.5in x 0.216in w/ 1/2HSS 4.5in x 0.337in	135	-62.78	159.57	39.3	Pass
T12	100 - 93.3333	Leg	P 3.5in x 0.3in w/ 1/2HSS 4.5in x 0.337in	144	-70.35	160.21	43.9	Pass
T13	93.3333 - 86.6667	Leg	P 3.5in x 0.3in w/ 1/2HSS 4.5in x 0.337in	153	-78.87	160.21	49.2	Pass
T14	86.6667 - 80	Leg	P 3.5in x 0.3in w/ 1/2HSS 4.5in x 0.337in	162	-86.87	160.21	54.2	Pass
T15	80 - 73.3333	Leg	P 4in x 0.318in w/ 1/2HSS 5.563in x 0.375in	171	-94.78	229.21	41.4	Pass
T16	73.3333 - 66.6667	Leg	P 4in x 0.318in w/ 1/2HSS 5.563in x 0.375in	180	-102.46	229.20	44.7	Pass
T17	66.6667 - 60	Leg	P 4in x 0.318in w/ 1/2HSS 5.563in x 0.375in	189	-110.00	229.21	48.0	Pass
T18	60 - 53.3333	Leg	P 4.5in x 0.337in w/ 1/2HSS 5.563in x 0.375in	198	-117.46	271.62	43.2	Pass
T19	53.3333 - 46.6667	Leg	P 4.5in x 0.337in w/ 1/2HSS 5.563in x 0.375in	207	-124.54	271.62	45.9	Pass
T20	46.6667 - 40	Leg	P 4.5in x 0.337in w/ 1/2HSS 5.563in x 0.375in	216	-131.79	271.62	48.5	Pass
T21	40 - 30	Leg	P 5.563in x 0.258in w/ 1/2HSS 6.625in x 0.432in	225	-140.71	279.02	50.4	Pass
T22	30 - 20	Leg	P 5.563in x 0.258in w/ 1/2HSS 6.625in x 0.432in	234	-151.32	279.02	54.2	Pass
T23	20 - 10	Leg	P 5.563in x 0.375in w/ 1/2HSS 6.625in x 0.432in	243	-162.42	342.30	47.4	Pass
T24	10 - 0	Leg	P 5.563in x 0.375in w/ 1/2HSS 6.625in x 0.432in	252	-172.48	342.30	50.4	Pass
T1	172 - 160	Diagonal	L1 1/2x1 1/2x1/8	11	-0.33	5.06	6.5	Pass
T2	160 - 140	Diagonal	L1 1/2x1 1/2x3/16	28	-1.22	7.21	16.9	Pass
T3	140 - 136	Diagonal	L1 3/4x1 3/4x3/16	62	-1.30	11.78	11.1	Pass
T4	136 - 132	Diagonal	L2x2x1/4	71	-2.44	21.22	11.5	Pass
T5	132 - 128	Diagonal	L2x2x1/4	80	-2.82	21.19	13.3	Pass
T6	128 - 124	Diagonal	L2x2x1/4	88	-3.25	21.18	15.3	Pass
T7	124 - 120	Diagonal	L2x2x1/4	98	-3.89	21.16	18.4	Pass
T8	120 - 115	Diagonal	L2x2x1/4	107	-3.18	17.69	18.0	Pass
T9	115 - 110	Diagonal	L2x2x1/4	116	-3.66	16.05	22.8	Pass
T10	110 - 105	Diagonal	L2x2x1/4	128	-3.53	14.93	23.7	Pass

Section No.	Elevation (ft)	Component Type	Size	Critical Element	P (K)	SF*P_allow (K)	% Capacity	Pass / Fail
T11	105 - 100	Diagonal	L2x2x1/4	137	-3.49	13.72	25.4	Pass
T12	100 - 93.3333	Diagonal	L2x2x3/16	148	-3.77	7.80	48.4	Pass
T13	93.3333 - 86.6667	Diagonal	L2x2x1/4	157	-3.80	9.13	41.7	Pass
T14	86.6667 - 80	Diagonal	L2x2x1/4	166	-3.84	8.29	46.3	Pass
T15	80 - 73.3333	Diagonal	L2 1/2x2 1/2x1/4	175	-3.92	15.46	25.4	Pass
T16	73.3333 - 66.6667	Diagonal	L2 1/2x2 1/2x1/4	184	-3.99	14.09	28.3	Pass
T17	66.6667 - 60	Diagonal	L2 1/2x2 1/2x1/4	193	-4.15	12.88	32.2	Pass
T18	60 - 53.3333	Diagonal	L2 1/2x2 1/2x3/16	202	-4.10	9.03	45.5	Pass
T19	53.3333 - 46.6667	Diagonal	L2 1/2x2 1/2x3/16	211	-4.28	8.28	51.6	Pass
T20	46.6667 - 40	Diagonal	L2 1/2x2 1/2x1/4	220	-4.39	9.90	44.3	Pass
T21	40 - 30	Diagonal	L3x3x3/16	229	-5.09	10.03	50.8	Pass
T22	30 - 20	Diagonal	L3x3x1/4	238	-5.41	11.92	45.4	Pass
T23	20 - 10	Diagonal	L3 1/2x3 1/2x1/4	247	-5.37	17.67	30.4	Pass
T24	10 - 0	Diagonal	L3 1/2x3 1/2x1/4	256	-5.87	16.20	36.2	Pass
T9	115 - 110	Secondary Horizontal	L2x2x1/4	122	-0.84	21.46	3.9	Pass
T1	172 - 160	Top Girt	L1 1/2x1 1/2x1/8	5	-0.04	1.76	2.2	Pass
							Summary	
						Leg (T22)	54.2	Pass
						Diagonal (T19)	51.6	Pass
						Secondary Horizontal (T9)	3.9	Pass
						Top Girt (T1)	2.2	Pass
						Bolt Checks	64.8	Pass
						Rating =	64.8	Pass

Table 5 - Tower Component Stresses vs. Capacity - LC7

Notes	Component	Elevation (ft)	% Capacity	Pass / Fail
1	Anchor Rods	0	50.8	Pass
1	Base Foundation (Structure)	0	9.6	Pass
1	Base Foundation (Soil Interaction)	0	79.1	Pass

Structure Rating (max from all components) =	**79.1%**

Notes:
1) See additional documentation in "Appendix C – Additional Calculations" for calculations supporting the % capacity consumed.

4.1) Recommendations

The tower and its foundation have sufficient capacity to carry the proposed load configuration. No modifications are required at this time.

APPENDIX A

TNXTOWER OUTPUT

Section	T1	T2	T3	T4	T5	T6	T7	T8	T9	T10	T11	T12	T13	T14	T15	T16	T17	T18	T19	T20	T21	T22	T23	T24
Legs	ROHN 2 STD		ROHN 2.5 EH					ROHN 3 STD		A			B			C			D			E		F
Leg Grade	A572-50																							
Diagonals	L1 1/2x1 1/2x1/8	L1 1/2x1 1/2x3/16	G	L2x2x1/4								H	L2x2x1/4		L2 1/2x2 1/2x1/4			L2 1/2x2 1/2x3/16		I	L3x3x3/16	L3x3x1/4	L3 1/2x3 1/2x1/4
Diagonal Grade	A36																							
Top Girts	L1 1/2x1 1/2x1/8																							
Sec. Horizontals	N.A.								J						N.A.									
Face Width (ft)	6.52083		5.5625	5.5703	5.5781	5.5859	5.5938	5.6016	5.6094	5.6172	5.6250	5.6328	5.6406	5.6484	5.6563	5.6641	5.6719	5.6797	5.6875	5.6953	5.7031	5.7108	5.7186	5.7264
# Panels @ (ft)	13 @ 4							4 @ 5							9 @ 6.66667							4 @ 10		
Weight (K)	0.3	0.7	0.2	0.3	0.3	0.3	0.3	0.3	0.4	0.4	0.4	0.5	0.6	0.6	0.8	0.8	0.8	0.8	0.8	0.9	1.3	1.5	1.8	1.9

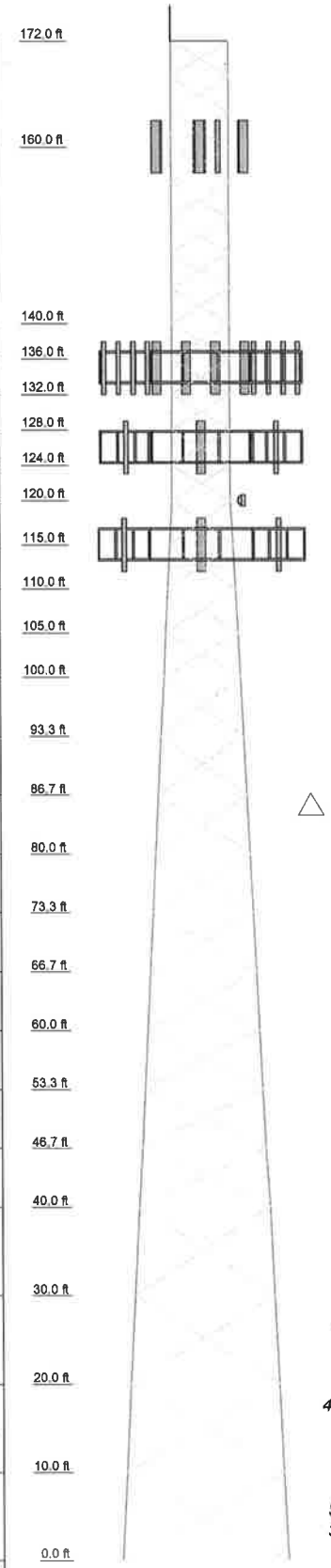

SYMBOL LIST

MARK	SIZE	MARK	SIZE
A	P 3.5in x 0.216in w/ 1/2HSS 4.5in x 0.337in	F	P 5.563in x 0.375in w/ 1/2HSS 6.625in x 0.432in
B	P 3.5in x 0.3in w/ 1/2HSS 4.5in x 0.337in	G	L1 3/4x1 3/4x3/16
C	P 4in x 0.318in w/ 1/2HSS 5.563in x 0.375in	H	L2x2x3/16
D	P 4.5in x 0.337in w/ 1/2HSS 5.563in x 0.375in	I	L2 1/2x2 1/2x1/4
E	P 5.563in x 0.258in w/ 1/2HSS 6.625in x 0.432in	J	L2x2x1/4

MATERIAL STRENGTH

GRADE	Fy	Fu	GRADE	Fy	Fu
A572-50	50 ksi	65 ksi	A36	36 ksi	58 ksi

TOWER DESIGN NOTES

1. Tower is located in Du Page County, Illinois.
2. Tower designed for Exposure C to the TIA-222-H Standard.
3. Tower designed for a 116 mph basic wind in accordance with the TIA-222-H Standard.
4. Tower is also designed for a 40 mph basic wind with 1.50 in ice. Ice is considered to increase in thickness with height.
5. Deflections are based upon a 60 mph wind.
6. Tower Risk Category II.
7. Topographic Category 1 with Crest Height of 0'
8. TOWER RATING: 64.8%

ALL REACTIONS ARE FACTORED

MAX. CORNER REACTIONS AT BASE:
DOWN: 178 K
SHEAR: 19 K

UPLIFT: -148 K
SHEAR: 16 K

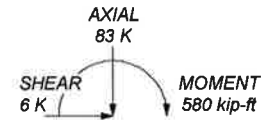

TORQUE 2 kip-ft
40 mph WIND - 1.500 in ICE

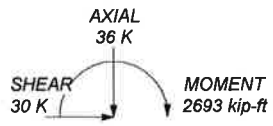

TORQUE 14 kip-ft
REACTIONS - 116 mph WIND

CROWN CASTLE
The Pathway to Possible

Crown Castle
2000 Corporate Drive
Canonsburg, PA 15317
Phone: (724) 416-2000
FAX:

Job: **BU 873681**			
Project:			
Client: Crown Castle	Drawn by: Rashworth	App'd:	
Code: TIA-222-H	Date: 08/30/21	Scale: NTS	
Path: C:\NEW Directory\873681\WO 2012805 - SA\Proj\873681 RPA - Leg Reinforcement.eri		Dwg No. E-1	

Tower Input Data

The main tower is a 3x free standing tower with an overall height of 172' above the ground line.
The base of the tower is set at an elevation of 0' above the ground line.
The face width of the tower is 6'6-1/4" at the top and 18'9-1/4" at the base.
This tower is designed using the TIA-222-H standard.
The following design criteria apply:

- Tower is located in Du Page County, Illinois.
- Tower base elevation above sea level: 750'.
- Basic wind speed of 116 mph.
- Risk Category II.
- Exposure Category C.
- Simplified Topographic Factor Procedure for wind speed-up calculations is used.
- Topographic Category: 1.
- Crest Height: 0'.
- Nominal ice thickness of 1.500 in.
- Ice thickness is considered to increase with height.
- Ice density of 56.00 pcf.
- A wind speed of 40 mph is used in combination with ice.
- Temperature drop of 50.00 °F.
- Deflections calculated using a wind speed of 60 mph.
- Pressures are calculated at each section.
- Stress ratio used in tower member design is 1.
- Tower analysis based on target reliabilities in accordance with Annex S.
- Load Modification Factors used: $K_{es}(F_w) = 0.95$, $K_{es}(t_i) = 0.85$.
- Maximum demand-capacity ratio is: 1.05.
- Local bending stresses due to climbing loads, feed line supports, and appurtenance mounts are not considered.

Options

Consider Moments - Legs
Consider Moments - Horizontals
Consider Moments - Diagonals
Use Moment Magnification
√ Use Code Stress Ratios
√ Use Code Safety Factors - Guys
Escalate Ice
Always Use Max Kz
Use Special Wind Profile

Include Bolts In Member Capacity

Leg Bolts Are At Top Of Section
√ Secondary Horizontal Braces Leg
Use Diamond Inner Bracing (4 Sided)
SR Members Have Cut Ends
SR Members Are Concentric

Distribute Leg Loads As Uniform
Assume Legs Pinned
√ Assume Rigid Index Plate
√ Use Clear Spans For Wind Area
√ Use Clear Spans For KL/r
Retension Guys To Initial Tension
√ Bypass Mast Stability Checks
√ Use Azimuth Dish Coefficients
√ Project Wind Area of Appurt.

Autocalc Torque Arm Areas

Add IBC .6D+W Combination
√ Sort Capacity Reports By Component
Triangulate Diamond Inner Bracing
Treat Feed Line Bundles As Cylinder
Ignore KL/ry For 60 Deg. Angle Legs

Use ASCE 10 X-Brace Ly Rules
√ Calculate Redundant Bracing Forces
Ignore Redundant Members in FEA
SR Leg Bolts Resist Compression
All Leg Panels Have Same Allowable
Offset Girt At Foundation
√ Consider Feed Line Torque
√ Include Angle Block Shear Check
Use TIA-222-H Bracing Resist. Exemption
Use TIA-222-H Tension Splice Exemption

Poles

Include Shear-Torsion Interaction
Always Use Sub-Critical Flow
Use Top Mounted Sockets
Pole Without Linear Attachments
Pole With Shroud Or No Appurtenances
Outside and Inside Corner Radii Are Known

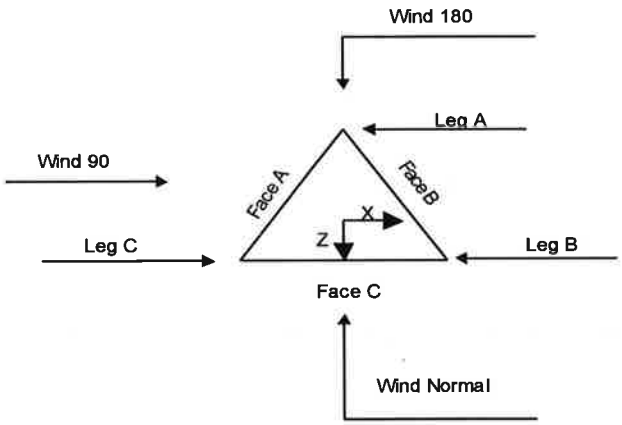

Triangular Tower

Tower Section Geometry

Tower Section	Tower Elevation ft	Assembly Database	Description	Section Width ft	Number of Sections	Section Length ft
T1	172'-160'			6'6-1/4"	1	12'
T2	160'-140'			6'6-1/4"	1	20'
T3	140'-136'			6'6-23/32"	1	4'
T4	136'-132'			6'6-27/32"	1	4'
T5	132'-128'			6'6-31/32"	1	4'
T6	128'-124'			6'7-3/32"	1	4'
T7	124'-120'			6'7-3/16"	1	4'
T8	120'-115'			6'7-3/16"	1	5'
T9	115'-110'			7'1-3/16"	1	5'
T10	110'-105'			7'7-3/16"	1	5'
T11	105'-100'			8'1-3/16"	1	5'
T12	100'-93'3-31/32"			8'7-3/16"	1	6'8-1/32"
T13	93'3-31/32"-86'8-1/32"			9'3-3/8"	1	6'8-1/32"
T14	86'8-1/32"-80'			9'11-17/32"	1	6'8-1/32"
T15	80'-73'3-31/32"			10'7-11/16"	1	6'8-1/32"
T16	73'3-31/32"-66'8-1/32"			11'3-27/32"	1	6'8-1/32"
T17	66'8-1/32"-60'			12'	1	6'8-1/32"
T18	60'-53'3-31/32"			12'8-5/32"	1	6'8-1/32"
T19	53'3-31/32"-46'8-1/32"			13'4-9/16"	1	6'8-1/32"
T20	46'8-1/32"-40'			14'27/32"	1	6'8-1/32"
T21	40'-30'			14'9-1/4"	1	10'
T22	30'-20'			15'9-1/4"	1	10'
T23	20'-10'			16'9-1/4"	1	10'
T24	10'-0'			17'9-1/4"	1	10'

Tower Section Geometry *(cont'd)*

Tower Section	Tower Elevation ft	Diagonal Spacing ft	Bracing Type	Has K Brace End Panels	Has Horizontals	Top Girt Offset in	Bottom Girt Offset in
T1	172'-160'	4'	X Brace	No	No	0.000	0.000
T2	160'-140'	4'	X Brace	No	No	0.000	0.000
T3	140'-136'	4'	X Brace	No	No	0.000	0.000
T4	136'-132'	4'	X Brace	No	No	0.000	0.000
T5	132'-128'	4'	X Brace	No	No	0.000	0.000
T6	128'-124'	4'	X Brace	No	No	0.000	0.000
T7	124'-120'	4'	X Brace	No	No	0.000	0.000
T8	120'-115'	5'	X Brace	No	No	0.000	0.000
T9	115'-110'	5'	X Brace	No	Yes	0.000	0.000
T10	110'-105'	5'	X Brace	No	Yes	0.000	0.000
T11	105'-100'	5'	X Brace	No	Yes	0.000	0.000
T12	100'-93'3-31/32"	6'8-1/32"	X Brace	No	Yes	0.000	0.000
T13	93'3-31/32"-86'8-1/32"	6'8-1/32"	X Brace	No	Yes	0.000	0.000
T14	86'8-1/32"-80'	6'8-1/32"	X Brace	No	Yes	0.000	0.000
T15	80'-73'3-31/32"	6'8-1/32"	X Brace	No	Yes	0.000	0.000
T16	73'3-31/32"-66'8-1/32"	6'8-1/32"	X Brace	No	Yes	0.000	0.000
T17	66'8-1/32"-60'	6'8-1/32"	X Brace	No	Yes	0.000	0.000
T18	60'-53'3-31/32"	6'8-1/32"	X Brace	No	Yes	0.000	0.000
T19	53'3-31/32"-46'8-1/32"	6'8-1/32"	X Brace	No	Yes	0.000	0.000
T20	46'8-1/32"-40'	6'8-1/32"	X Brace	No	Yes	0.000	0.000
T21	40'-30'	10'	X Brace	No	Yes	0.000	0.000
T22	30'-20'	10'	X Brace	No	Yes	0.000	0.000
T23	20'-10'	10'	X Brace	No	Yes	0.000	0.000
T24	10'-0'	10'	X Brace	No	Yes	0.000	0.000

Tower Section Geometry *(cont'd)*

Tower Elevation ft	Leg Type	Leg Size	Leg Grade	Diagonal Type	Diagonal Size	Diagonal Grade
T1 172'-160'	Pipe	ROHN 2 STD	A572-50 (50 ksi)	Equal Angle	L1 1/2x1 1/2x1/8	A36 (36 ksi)
T2 160'-140'	Pipe	ROHN 2 STD	A572-50 (50 ksi)	Equal Angle	L1 1/2x1 1/2x3/16	A36 (36 ksi)
T3 140'-136'	Pipe	ROHN 2.5 EH	A572-50 (50 ksi)	Equal Angle	L1 3/4x1 3/4x3/16	A36 (36 ksi)
T4 136'-132'	Pipe	ROHN 2.5 EH	A572-50 (50 ksi)	Equal Angle	L2x2x1/4	A36 (36 ksi)
T5 132'-128'	Pipe	ROHN 2.5 EH	A572-50 (50 ksi)	Equal Angle	L2x2x1/4	A36 (36 ksi)
T6 128'-124'	Pipe	ROHN 2.5 EH	A572-50 (50 ksi)	Equal Angle	L2x2x1/4	A36 (36 ksi)
T7 124'-120'	Pipe	ROHN 2.5 EH	A572-50 (50 ksi)	Equal Angle	L2x2x1/4	A36 (36 ksi)
T8 120'-115'	Pipe	ROHN 3 STD	A572-50 (50 ksi)	Equal Angle	L2x2x1/4	A36 (36 ksi)
T9 115'-110'	Pipe	ROHN 3 STD	A572-50 (50 ksi)	Equal Angle	L2x2x1/4	A36 (36 ksi)
T10 110'-105'	Arbitrary Shape	P 3.5in x 0.216in w/ 1/2HSS 4.5in x 0.337in	A572-50 (50 ksi)	Equal Angle	L2x2x1/4	A36 (36 ksi)
T11 105'-100'	Arbitrary Shape	P 3.5in x 0.216in w/ 1/2HSS 4.5in x 0.337in	A572-50 (50 ksi)	Equal Angle	L2x2x1/4	A36 (36 ksi)
T12 100'-93'3-31/32"	Arbitrary Shape	P 3.5in x 0.3in w/ 1/2HSS 4.5in x 0.337in	A572-50 (50 ksi)	Equal Angle	L2x2x3/16	A36 (36 ksi)
T13 93'3-31/32"-86'8-1/32"	Arbitrary Shape	P 3.5in x 0.3in w/ 1/2HSS 4.5in x 0.337in	A572-50 (50 ksi)	Equal Angle	L2x2x1/4	A36 (36 ksi)
T14 86'8-1/32"-80'	Arbitrary Shape	P 3.5in x 0.3in w/ 1/2HSS 4.5in x 0.337in	A572-50 (50 ksi)	Equal Angle	L2x2x1/4	A36 (36 ksi)
T15 80'-73'3-	Arbitrary Shape	P 4in x 0.318in w/ 1/2HSS	A572-50	Equal Angle	L2 1/2x2 1/2x1/4	A36

Tower Elevation ft	Leg Type	Leg Size	Leg Grade	Diagonal Type	Diagonal Size	Diagonal Grade
31/32"		5.563in x 0.375in	(50 ksi)			(36 ksi)
T16 73'3-31/32"-66'8-1/32"	Arbitrary Shape	P 4in x 0.318in w/ 1/2HSS 5.563in x 0.375in	A572-50 (50 ksi)	Equal Angle	L2 1/2x2 1/2x1/4	A36 (36 ksi)
T17 66'8-1/32"-60'	Arbitrary Shape	P 4in x 0.318in w/ 1/2HSS 5.563in x 0.375in	A572-50 (50 ksi)	Equal Angle	L2 1/2x2 1/2x1/4	A36 (36 ksi)
T18 60'-53'3-31/32"	Arbitrary Shape	P 4.5in x 0.337in w/ 1/2HSS 5.563in x 0.375in	A572-50 (50 ksi)	Equal Angle	L2 1/2x2 1/2x3/16	A36 (36 ksi)
T19 53'3-31/32"-46'8-1/32"	Arbitrary Shape	P 4.5in x 0.337in w/ 1/2HSS 5.563in x 0.375in	A572-50 (50 ksi)	Equal Angle	L2 1/2x2 1/2x3/16	A36 (36 ksi)
T20 46'8-1/32"-40'	Arbitrary Shape	P 4.5in x 0.337in w/ 1/2HSS 5.563in x 0.375in	A572-50 (50 ksi)	Equal Angle	L2 1/2x2 1/2x1/4	A36 (36 ksi)
T21 40'-30'	Arbitrary Shape	P 5.563in x 0.258in w/ 1/2HSS 6.625in x 0.432in	A572-50 (50 ksi)	Equal Angle	L3x3x3/16	A36 (36 ksi)
T22 30'-20'	Arbitrary Shape	P 5.563in x 0.258in w/ 1/2HSS 6.625in x 0.432in	A572-50 (50 ksi)	Equal Angle	L3x3x1/4	A36 (36 ksi)
T23 20'-10'	Arbitrary Shape	P 5.563in x 0.375in w/ 1/2HSS 6.625in x 0.432in	A572-50 (50 ksi)	Equal Angle	L3 1/2x3 1/2x1/4	A36 (36 ksi)
T24 10'-0'	Arbitrary Shape	P 5.563in x 0.375in w/ 1/2HSS 6.625in x 0.432in	A572-50 (50 ksi)	Equal Angle	L3 1/2x3 1/2x1/4	A36 (36 ksi)

Tower Section Geometry *(cont'd)*

Tower Elevation ft	Top Girt Type	Top Girt Size	Top Girt Grade	Bottom Girt Type	Bottom Girt Size	Bottom Girt Grade
T1 172'-160'	Equal Angle	L1 1/2x1 1/2x1/8	A36 (36 ksi)	Single Angle		A36 (36 ksi)

Tower Section Geometry *(cont'd)*

Tower Elevation ft	Secondary Horizontal Type	Secondary Horizontal Size	Secondary Horizontal Grade	Inner Bracing Type	Inner Bracing Size	Inner Bracing Grade
T9 115'-110'	Single Angle	L2x2x1/4	A36 (36 ksi)	Single Angle		A36 (36 ksi)

Tower Section Geometry *(cont'd)*

Tower Elevation ft	Gusset Area (per face) ft^2	Gusset Thickness in	Gusset Grade	Adjust. Factor A_f	Adjust. Factor A_r	Weight Mult.	Double Angle Stitch Bolt Spacing Diagonals in	Double Angle Stitch Bolt Spacing Horizontals in	Double Angle Stitch Bolt Spacing Redundants in
T1 172'-160'	0.00	0.179	A36 (36 ksi)	1.03	1	1.05	36.000	36.000	36.000
T2 160'-140'	0.00	0.179	A36 (36 ksi)	1.03	1	1.05	36.000	36.000	36.000
T3 140'-136'	0.00	0.179	A36 (36 ksi)	1.03	1	1.05	36.000	36.000	36.000
T4 136'-132'	0.00	0.179	A36 (36 ksi)	1.03	1	1.05	36.000	36.000	36.000
T5 132'-128'	0.00	0.179	A36	1.03	1	1.05	36.000	36.000	36.000

Tower Elevation ft	Gusset Area (per face) ft^2	Gusset Thickness in	Gusset Grade	Adjust. Factor A_f	Adjust. Factor A_r	Weight Mult.	Double Angle Stitch Bolt Spacing Diagonals in	Double Angle Stitch Bolt Spacing Horizontals in	Double Angle Stitch Bolt Spacing Redundants in
T6 128'-124'	0.00	0.179	(36 ksi) A36 (36 ksi)	1.03	1	1.05	36.000	36.000	36.000
T7 124'-120'	0.00	0.179	(36 ksi) A36 (36 ksi)	1.03	1	1.05	36.000	36.000	36.000
T8 120'-115'	0.00	0.179	(36 ksi) A36 (36 ksi)	1.03	1	1.05	36.000	36.000	36.000
T9 115'-110'	0.00	0.179	(36 ksi) A36 (36 ksi)	1.03	1	1.05	36.000	36.000	36.000
T10 110'-105'	0.00	0.179	(36 ksi) A36 (36 ksi)	1.03	1	1.05	36.000	36.000	36.000
T11 105'-100'	0.00	0.179	(36 ksi) A36 (36 ksi)	1.03	1	1.05	36.000	36.000	36.000
T12 100'-93'3-31/32"	0.00	0.179	(36 ksi) A36 (36 ksi)	1.03	1	1.05	36.000	36.000	36.000
T13 93'3-31/32"-86'8-1/32"	0.00	0.179	(36 ksi) A36 (36 ksi)	1.03	1	1.05	36.000	36.000	36.000
T14 86'8-1/32"-80'	0.00	0.179	(36 ksi) A36 (36 ksi)	1.03	1	1.05	36.000	36.000	36.000
T15 80'-73'3-31/32"	0.00	0.179	(36 ksi) A36 (36 ksi)	1.03	1	1.05	36.000	36.000	36.000
T16 73'3-31/32"-66'8-1/32"	0.00	0.179	(36 ksi) A36 (36 ksi)	1.03	1	1.05	36.000	36.000	36.000
T17 66'8-1/32"-60'	0.00	0.179	(36 ksi) A36 (36 ksi)	1.03	1	1.05	36.000	36.000	36.000
T18 60'-53'3-31/32"	0.00	0.179	(36 ksi) A36 (36 ksi)	1.03	1	1.05	36.000	36.000	36.000
T19 53'3-31/32"-46'8-1/32"	0.00	0.179	(36 ksi) A36 (36 ksi)	1.03	1	1.05	36.000	36.000	36.000
T20 46'8-1/32"-40'	0.00	0.179	(36 ksi) A36 (36 ksi)	1.03	1	1.05	36.000	36.000	36.000
T21 40'-30'	0.00	0.250	(36 ksi) A36 (36 ksi)	1.03	1	1.05	36.000	36.000	36.000
T22 30'-20'	0.00	0.250	(36 ksi) A36 (36 ksi)	1.03	1	1.05	36.000	36.000	36.000
T23 20'-10'	0.00	0.250	(36 ksi) A36 (36 ksi)	1.03	1	1.05	36.000	36.000	36.000
T24 10'-0'	0.00	0.250	(36 ksi) A36 (36 ksi)	1.03	1	1.05	36.000	36.000	36.000

Tower Section Geometry *(cont'd)*

Tower Elevation ft	Calc K Single Angles	Calc K Solid Rounds	K Factors[1] Legs	X Brace Diags X Y	K Brace Diags X Y	Single Diags X Y	Girts X Y	Horiz. X Y	Sec. Horiz. X Y	Inner Brace X Y
T1 172'-160'	Yes	Yes	1	1	1	1	1	1	1	1
				1	1	1	1	1	1	1
T2 160'-140'	Yes	Yes	1	1	1	1	1	1	1	1
				1	1	1	1	1	1	1
T3 140'-136'	Yes	Yes	1	1	1	1	1	1	1	1
				1	1	1	1	1	1	1
T4 136'-132'	Yes	Yes	1	1	1	1	1	1	1	1
				1	1	1	1	1	1	1
T5 132'-128'	Yes	Yes	1	1	1	1	1	1	1	1
				1	1	1	1	1	1	1
T6 128'-124'	Yes	Yes	1	1	1	1	1	1	1	1
				1	1	1	1	1	1	1

Tower Elevation ft	Calc K Single Angles	Calc K Solid Rounds	K Factors[1] Legs	X Brace Diags X Y	K Brace Diags X Y	Single Diags X Y	Girts X Y	Horiz. X Y	Sec. Horiz. X Y	Inner Brace X Y
T7 124'-120'	Yes	Yes	1	1	1	1	1	1	1	1
				1	1	1	1	1	1	1
T8 120'-115'	Yes	Yes	1	1	1	1	1	1	1	1
				1	1	1	1	1	1	1
T9 115'-110'	Yes	Yes	1	1	1	1	1	1	1	1
				1	1	1	1	1	0.5	1
T10 110'-105'	Yes	Yes	1.124	1	1	1	1	1	1	1
				1	1	1	1	1	1	1
T11 105'-100'	Yes	Yes	1.124	1	1	1	1	1	1	1
				1	1	1	1	1	1	1
T12 100'-93'3-31/32"	Yes	Yes	1.073	1	1	1	1	1	1	1
				1	1	1	1	1	1	1
T13 93'3-31/32"-86'8-1/32"	Yes	Yes	1.073	1	1	1	1	1	1	1
				1	1	1	1	1	1	1
T14 86'8-1/32"-80'	Yes	Yes	1.073	1	1	1	1	1	1	1
				1	1	1	1	1	1	1
T15 80'-73'3-31/32"	Yes	Yes	1.061	1	1	1	1	1	1	1
				1	1	1	1	1	1	1
T16 73'3-31/32"-66'8-1/32"	Yes	Yes	1.061	1	1	1	1	1	1	1
				1	1	1	1	1	1	1
T17 66'8-1/32"-60'	Yes	Yes	1.061	1	1	1	1	1	1	1
				1	1	1	1	1	1	1
T18 60'-53'3-31/32"	Yes	Yes	1.079	1	1	1	1	1	1	1
				1	1	1	1	1	1	1
T19 53'3-31/32"-46'8-1/32"	Yes	Yes	1.079	1	1	1	1	1	1	1
				1	1	1	1	1	1	1
T20 46'8-1/32"-40'	Yes	Yes	1.079	1	1	1	1	1	1	1
				1	1	1	1	1	1	1
T21 40'-30'	Yes	Yes	1.037	1	1	1	1	1	1	1
				1	1	1	1	1	1	1
T22 30'-20'	Yes	Yes	1.037	1	1	1	1	1	1	1
				1	1	1	1	1	1	1
T23 20'-10'	Yes	Yes	1.039	1	1	1	1	1	1	1
				1	1	1	1	1	1	1
T24 10'-0'	Yes	Yes	1.039	1	1	1	1	1	1	1
				1	1	1	1	1	1	1

[1]*Note: K factors are applied to member segment lengths. K-braces without inner supporting members will have the K factor in the out-of-plane direction applied to the overall length.*

Tower Section Geometry *(cont'd)*

Tower Elevation ft	Leg Net Width Deduct in	Leg U	Diagonal Net Width Deduct in	Diagonal U	Top Girt Net Width Deduct in	Top Girt U	Bottom Girt Net Width Deduct in	Bottom Girt U	Mid Girt Net Width Deduct in	Mid Girt U	Long Horizontal Net Width Deduct in	Long Horizontal U	Short Horizontal Net Width Deduct in	Short Horizontal U
T1 172'-160'	0.000	1	0.000	0.75	0.000	0.75	0.000	0.75	0.000	0.75	0.000	0.75	0.000	0.75
T2 160'-140'	0.000	1	0.000	0.75	0.000	0.75	0.000	0.75	0.000	0.75	0.000	0.75	0.000	0.75
T3 140'-136'	0.000	1	0.000	0.75	0.000	0.75	0.000	0.75	0.000	0.75	0.000	0.75	0.000	0.75
T4 136'-132'	0.000	1	0.000	0.75	0.000	0.75	0.000	0.75	0.000	0.75	0.000	0.75	0.000	0.75
T5 132'-128'	0.000	1	0.000	0.75	0.000	0.75	0.000	0.75	0.000	0.75	0.000	0.75	0.000	0.75
T6 128'-124'	0.000	1	0.000	0.75	0.000	0.75	0.000	0.75	0.000	0.75	0.000	0.75	0.000	0.75
T7 124'-120'	0.000	1	0.000	0.75	0.000	0.75	0.000	0.75	0.000	0.75	0.000	0.75	0.000	0.75
T8 120'-115'	0.000	1	0.000	0.75	0.000	0.75	0.000	0.75	0.000	0.75	0.000	0.75	0.000	0.75
T9 115'-110'	0.000	1	0.000	0.75	0.000	0.75	0.000	0.75	0.000	0.75	0.000	0.75	0.000	0.75
T10 110'-105'	0.000	1	0.000	0.75	0.000	0.75	0.000	0.75	0.000	0.75	0.000	0.75	0.000	0.75
T11 105'-100'	0.000	1	0.000	0.75	0.000	0.75	0.000	0.75	0.000	0.75	0.000	0.75	0.000	0.75

Tower Elevation ft	Leg		Diagonal		Top Girt		Bottom Girt		Mid Girt		Long Horizontal		Short Horizontal	
	Net Width Deduct in	U	Net Width Deduct in	U	Net Width Deduct in	U	Net Width Deduct in	U	Net Width Deduct in	U	Net Width Deduct in	U	Net Width Deduct in	U
T12 100'-93'3-31/32"	0.000	1	0.000	0.75	0.000	0.75	0.000	0.75	0.000	0.75	0.000	0.75	0.000	0.75
T13 93'3-31/32"-86'8-1/32"	0.000	1	0.000	0.75	0.000	0.75	0.000	0.75	0.000	0.75	0.000	0.75	0.000	0.75
T14 86'8-1/32"-80'	0.000	1	0.000	0.75	0.000	0.75	0.000	0.75	0.000	0.75	0.000	0.75	0.000	0.75
T15 80'-73'3-31/32"	0.000	1	0.000	0.75	0.000	0.75	0.000	0.75	0.000	0.75	0.000	0.75	0.000	0.75
T16 73'3-31/32"-66'8-1/32"	0.000	1	0.000	0.75	0.000	0.75	0.000	0.75	0.000	0.75	0.000	0.75	0.000	0.75
T17 66'8-1/32"-60'	0.000	1	0.000	0.75	0.000	0.75	0.000	0.75	0.000	0.75	0.000	0.75	0.000	0.75
T18 60'-53'3-31/32"	0.000	1	0.000	0.75	0.000	0.75	0.000	0.75	0.000	0.75	0.000	0.75	0.000	0.75
T19 53'3-31/32"-46'8-1/32"	0.000	1	0.000	0.75	0.000	0.75	0.000	0.75	0.000	0.75	0.000	0.75	0.000	0.75
T20 46'8-1/32"-40'	0.000	1	0.000	0.75	0.000	0.75	0.000	0.75	0.000	0.75	0.000	0.75	0.000	0.75
T21 40'-30'	0.000	1	0.000	0.75	0.000	0.75	0.000	0.75	0.000	0.75	0.000	0.75	0.000	0.75
T22 30'-20'	0.000	1	0.000	0.75	0.000	0.75	0.000	0.75	0.000	0.75	0.000	0.75	0.000	0.75
T23 20'-10'	0.000	1	0.000	0.75	0.000	0.75	0.000	0.75	0.000	0.75	0.000	0.75	0.000	0.75
T24 10'-0'	0.000	1	0.000	0.75	0.000	0.75	0.000	0.75	0.000	0.75	0.000	0.75	0.000	0.75

Tower Elevation ft	Redundant Horizontal		Redundant Diagonal		Redundant Sub-Diagonal		Redundant Sub-Horizontal		Redundant Vertical		Redundant Hip		Redundant Hip Diagonal	
	Net Width Deduct in	U	Net Width Deduct in	U	Net Width Deduct in	U	Net Width Deduct in	U	Net Width Deduct in	U	Net Width Deduct in	U	Net Width Deduct in	U
T1 172'-160'	0.000	0.75	0.000	0.75	0.000	0.75	0.000	0.75	0.000	0.75	0.000	0.75	0.000	0.75
T2 160'-140'	0.000	0.75	0.000	0.75	0.000	0.75	0.000	0.75	0.000	0.75	0.000	0.75	0.000	0.75
T3 140'-136'	0.000	0.75	0.000	0.75	0.000	0.75	0.000	0.75	0.000	0.75	0.000	0.75	0.000	0.75
T4 136'-132'	0.000	0.75	0.000	0.75	0.000	0.75	0.000	0.75	0.000	0.75	0.000	0.75	0.000	0.75
T5 132'-128'	0.000	0.75	0.000	0.75	0.000	0.75	0.000	0.75	0.000	0.75	0.000	0.75	0.000	0.75
T6 128'-124'	0.000	0.75	0.000	0.75	0.000	0.75	0.000	0.75	0.000	0.75	0.000	0.75	0.000	0.75
T7 124'-120'	0.000	0.75	0.000	0.75	0.000	0.75	0.000	0.75	0.000	0.75	0.000	0.75	0.000	0.75
T8 120'-115'	0.000	0.75	0.000	0.75	0.000	0.75	0.000	0.75	0.000	0.75	0.000	0.75	0.000	0.75
T9 115'-110'	0.000	0.75	0.000	0.75	0.000	0.75	0.000	0.75	0.000	0.75	0.000	0.75	0.000	0.75
T10 110'-105'	0.000	0.75	0.000	0.75	0.000	0.75	0.000	0.75	0.000	0.75	0.000	0.75	0.000	0.75
T11 105'-100'	0.000	0.75	0.000	0.75	0.000	0.75	0.000	0.75	0.000	0.75	0.000	0.75	0.000	0.75
T12 100'-93'3-31/32"	0.000	0.75	0.000	0.75	0.000	0.75	0.000	0.75	0.000	0.75	0.000	0.75	0.000	0.75
T13 93'3-31/32"-86'8-1/32"	0.000	0.75	0.000	0.75	0.000	0.75	0.000	0.75	0.000	0.75	0.000	0.75	0.000	0.75
T14 86'8-1/32"-80'	0.000	0.75	0.000	0.75	0.000	0.75	0.000	0.75	0.000	0.75	0.000	0.75	0.000	0.75
T15 80'-73'3-31/32"	0.000	0.75	0.000	0.75	0.000	0.75	0.000	0.75	0.000	0.75	0.000	0.75	0.000	0.75
T16 73'3-31/32"-66'8-1/32"	0.000	0.75	0.000	0.75	0.000	0.75	0.000	0.75	0.000	0.75	0.000	0.75	0.000	0.75
T17 66'8-1/32"-60'	0.000	0.75	0.000	0.75	0.000	0.75	0.000	0.75	0.000	0.75	0.000	0.75	0.000	0.75
T18 60'-53'3-31/32"	0.000	0.75	0.000	0.75	0.000	0.75	0.000	0.75	0.000	0.75	0.000	0.75	0.000	0.75
T19 53'3-31/32"-46'8-1/32"	0.000	0.75	0.000	0.75	0.000	0.75	0.000	0.75	0.000	0.75	0.000	0.75	0.000	0.75

Tower Elevation ft	Redundant Horizontal		Redundant Diagonal		Redundant Sub-Diagonal		Redundant Sub-Horizontal		Redundant Vertical		Redundant Hip		Redundant Hip Diagonal	
	Net Width Deduct in	U	Net Width Deduct in	U	Net Width Deduct in	U	Net Width Deduct in	U	Net Width Deduct in	U	Net Width Deduct in	U	Net Width Deduct in	U
T20 46'8-1/32"-40'	0.000	0.75	0.000	0.75	0.000	0.75	0.000	0.75	0.000	0.75	0.000	0.75	0.000	0.75
T21 40'-30'	0.000	0.75	0.000	0.75	0.000	0.75	0.000	0.75	0.000	0.75	0.000	0.75	0.000	0.75
T22 30'-20'	0.000	0.75	0.000	0.75	0.000	0.75	0.000	0.75	0.000	0.75	0.000	0.75	0.000	0.75
T23 20'-10'	0.000	0.75	0.000	0.75	0.000	0.75	0.000	0.75	0.000	0.75	0.000	0.75	0.000	0.75
T24 10'-0'	0.000	0.75	0.000	0.75	0.000	0.75	0.000	0.75	0.000	0.75	0.000	0.75	0.000	0.75

Tower Section Geometry *(cont'd)*

Tower Elevation ft	Leg Connection Type	Leg		Diagonal		Top Girt		Bottom Girt		Mid Girt		Long Horizontal		Short Horizontal	
		Bolt Size in	No.	Bolt Size in	No.	Bolt Size in	No.	Bolt Size in	No.	Bolt Size in	No.	Bolt Size in	No.	Bolt Size in	No.
T1 172'-160'	Flange	0.625 A325N	4	0.500 A325X	1	0.500 A325X	1	0.000 A325N	0	0.500 A325N	0	0.500 A325N	0	0.500 A325N	0
T2 160'-140'	Flange	0.625 A325N	4	0.500 A325X	1	0.500 A325N	0	0.625 A325N	0	0.625 A325N	0	0.625 A325N	0	0.500 A325N	0
T3 140'-136'	Flange	0.750 A325N	0	0.500 A325X	1	0.500 A325N	0	0.000 A325N	0	0.625 A325N	0	0.625 A325N	0	0.500 A325N	0
T4 136'-132'	Flange	0.750 A325N	0	0.500 A325X	1	0.625 A325N	0	0.000 A325N	0	0.625 A325N	0	0.625 A325N	0	0.500 A325N	0
T5 132'-128'	Flange	0.750 A325N	0	0.500 A325N	1	0.625 A325N	0	0.000 A325N	0	0.625 A325N	0	0.625 A325N	0	0.500 A325N	0
T6 128'-124'	Flange	0.750 A325N	0	0.500 A325N	1	0.625 A325N	0	0.000 A325N	0	0.625 A325N	0	0.625 A325N	0	0.500 A325N	0
T7 124'-120'	Flange	0.750 A325N	4	0.500 A325N	1	0.625 A325N	0	0.625 A325N	0	0.625 A325N	0	0.625 A325N	0	0.500 A325N	0
T8 120'-115'	Flange	0.875 A325N	0	0.500 A325N	1	0.500 A325N	0	0.000 A325N	0	0.500 A325N	0	0.500 A325N	0	0.500 A325N	0
T9 115'-110'	Flange	0.875 A325N	0	0.500 A325N	1	0.500 A325N	0	0.000 A325N	0	0.500 A325N	0	0.500 A325N	0	0.625 A325N	1
T10 110'-105'	Flange	0.875 A325N	0	0.500 A325N	1	0.500 A325N	0	0.500 A325N	0	0.500 A325N	0	0.500 A325N	0	0.500 A325N	0
T11 105'-100'	Flange	0.875 A325N	4	0.500 A325N	1	0.500 A325N	0	0.500 A325N	0	0.500 A325N	0	0.500 A325N	0	0.500 A325N	0
T12 100'-93'3-31/32"	Flange	0.875 A325N	0	0.500 A325N	1	0.500 A325N	0	0.625 A325N	0	0.625 A325N	0	0.625 A325N	0	0.500 A325N	0
T13 93'3-31/32"-86'8-1/32"	Flange	0.875 A325N	0	0.500 A325N	1	0.500 A325N	0	0.625 A325N	0	0.625 A325N	0	0.625 A325N	0	0.500 A325N	0
T14 86'8-1/32"-80'	Flange	0.875 A325N	4	0.500 A325N	1	0.500 A325N	0	0.000 A325N	0	0.500 A325N	0	0.500 A325N	0	0.500 A325N	0
T15 80'-73'3-31/32"	Flange	1.000 A325N	0	0.500 A325N	1	0.500 A325N	0	0.000 A325N	0	0.500 A325N	0	0.500 A325N	0	0.500 A325N	0
T16 73'3-31/32"-66'8-1/32"	Flange	1.000 A325N	0	0.500 A325N	1	0.500 A325N	0	0.000 A325N	0	0.500 A325N	0	0.500 A325N	0	0.500 A325N	0
T17 66'8-1/32"-60'	Flange	1.000 A325N	4	0.500 A325N	1	0.500 A325N	0	0.500 A325N	0	0.500 A325N	0	0.500 A325N	0	0.500 A325N	0
T18 60'-53'3-31/32"	Flange	1.000 A325N	0	0.500 A325X	1	0.500 A325N	0	0.000 A325N	0	0.500 A325N	0	0.500 A325N	0	0.500 A325N	0
T19 53'3-31/32"-46'8-1/32"	Flange	1.000 A325N	0	0.500 A325X	1	0.500 A325N	0	0.000 A325N	0	0.500 A325N	0	0.500 A325N	0	0.500 A325N	0
T20 46'8-1/32"-40'	Flange	1.000 A325N	4	0.500 A325N	1	0.500 A325N	0	0.500 A325N	0	0.500 A325N	0	0.500 A325N	0	0.500 A325N	0
T21 40'-30'	Flange	1.000 A325N	0	0.625 A325X	1	0.625 A325N	0	0.000 A325N	0	0.625 A325N	0	0.625 A325N	0	0.625 A325N	0
T22 30'-20'	Flange	1.000 A325N	4	0.625 A325N	1	0.625 A325N	0	0.625 A325N	0	0.625 A325N	0	0.625 A325N	0	0.625 A325N	0

Tower Elevation ft	Leg Connection Type	Leg Bolt Size in	Leg No.	Diagonal Bolt Size in	Diagonal No.	Top Girt Bolt Size in	Top Girt No.	Bottom Girt Bolt Size in	Bottom Girt No.	Mid Girt Bolt Size in	Mid Girt No.	Long Horizontal Bolt Size in	Long Horizontal No.	Short Horizontal Bolt Size in	Short Horizontal No.
T23 20'-10'	Flange	1.000 A325N	0	0.625 A325N	1	0.625 A325N	0	0.000 A325N	0	0.625 A325N	0	0.625 A325N	0	0.625 A325N	0
T24 10'-0'	Flange	1.000 A354-BC	0	0.625 A325N	1	0.625 A325N	0	0.625 A325N	0	0.625 A325N	0	0.625 A325N	0	0.625 A325N	0

Feed Line/Linear Appurtenances - Entered As Round Or Flat

Description	Face or Leg	Allow Shield	Exclude From Torque Calculation	Component Type	Placement ft	Face Offset in	Lateral Offset (Frac FW)	#	# Per Row	Clear Spacing in	Width or Diameter in	Perimeter in	Weight plf
*** Misc ***													
Step Pegs (5/8" SR) 7.5-in w/ 30" Step	C	No	No	Ar (CaAa)	172' - 0'	0.000	0.5	1	1	0.313	0.313		0.52
Safety Line 3/8	C	No	No	Ar (CaAa)	172' - 0'	0.000	0.5	1	1	0.375	0.375		0.22
*** CA Face ***													
HF-T1L20F060SE(7/8)	A	No	No	Ar (CaAa)	115' - 0'	0.000	0.35	3	3	0.500	0.960		0.50
Feedline Ladder (Af)	A	No	No	Af (CaAa)	120' - 0'	0.000	0.35	1	1	3.000	3.000		8.40
*** BC Face Left ***													
HFT1208-24S26(1-1/4)	C	No	No	Ar (CaAa)	135' - 0'	0.000	-0.43	3	3	0.500	1.300		1.17
LDF5-50A(7/8)	C	No	No	Ar (CaAa)	135' - 0'	0.000	-0.37	12	12	0.500	1.090		0.33
Feedline Ladder (Af)	C	No	No	Af (CaAa)	135' - 0'	0.000	-0.4	1	1	3.000	3.000		8.40
*** BC Face Right ***													
LDF7-50A(1-5/8)	C	No	No	Ar (CaAa)	160' - 0'	0.000	0.4	4	2	0.500	1.980		0.82
Feedline Ladder (Af)	C	No	No	Af (CaAa)	160' - 0'	0.000	0.4	1	1	3.000	3.000		8.40
***													
CU12PSM6P490(1-3/4)	A	No	No	Ar (CaAa)	126' - 0'	0.000	0.48	1	1	1.750	1.750		2.72
***													
***													

Feed Line/Linear Appurtenances - Entered As Area

Description	Face or Leg	Allow Shield	Exclude From Torque Calculation	Component Type	Placement ft	Total Number	C_AA_A ft^2/ft	Weight plf
***								
***								

Feed Line/Linear Appurtenances Section Areas

Tower Section	Tower Elevation ft	Face	A_R ft^2	A_F ft^2	C_AA_A In Face ft^2	C_AA_A Out Face ft^2	Weight K
T1	172'-160'	A	0.000	0.000	0.000	0.000	0.00
		B	0.000	0.000	0.000	0.000	0.00
		C	0.000	0.000	0.826	0.000	0.01
T2	160'-140'	A	0.000	0.000	0.000	0.000	0.00
		B	0.000	0.000	0.000	0.000	0.00
		C	0.000	0.000	27.216	0.000	0.25
T3	140'-136'	A	0.000	0.000	0.000	0.000	0.00
		B	0.000	0.000	0.000	0.000	0.00
		C	0.000	0.000	5.443	0.000	0.05
T4	136'-132'	A	0.000	0.000	0.000	0.000	0.00
		B	0.000	0.000	0.000	0.000	0.00
		C	0.000	0.000	12.037	0.000	0.10
T5	132'-128'	A	0.000	0.000	0.000	0.000	0.00
		B	0.000	0.000	0.000	0.000	0.00
		C	0.000	0.000	14.235	0.000	0.11
T6	128'-124'	A	0.000	0.000	0.350	0.000	0.01
		B	0.000	0.000	0.000	0.000	0.00
		C	0.000	0.000	14.235	0.000	0.11
T7	124'-120'	A	0.000	0.000	0.700	0.000	0.01
		B	0.000	0.000	0.000	0.000	0.00
		C	0.000	0.000	14.235	0.000	0.11
T8	120'-115'	A	0.000	0.000	3.375	0.000	0.06
		B	0.000	0.000	0.000	0.000	0.00
		C	0.000	0.000	17.794	0.000	0.14
T9	115'-110'	A	0.000	0.000	4.815	0.000	0.06
		B	0.000	0.000	0.000	0.000	0.00
		C	0.000	0.000	17.794	0.000	0.14
T10	110'-105'	A	0.000	0.000	4.815	0.000	0.06
		B	0.000	0.000	0.000	0.000	0.00
		C	0.000	0.000	17.794	0.000	0.14
T11	105'-100'	A	0.000	0.000	4.815	0.000	0.06
		B	0.000	0.000	0.000	0.000	0.00
		C	0.000	0.000	17.794	0.000	0.14
T12	100'-93'3-31/32"	A	0.000	0.000	6.420	0.000	0.08
		B	0.000	0.000	0.000	0.000	0.00
		C	0.000	0.000	23.725	0.000	0.19
T13	93'3-31/32"-86'8-1/32"	A	0.000	0.000	6.420	0.000	0.08
		B	0.000	0.000	0.000	0.000	0.00
		C	0.000	0.000	23.725	0.000	0.19
T14	86'8-1/32"-80'	A	0.000	0.000	6.420	0.000	0.08
		B	0.000	0.000	0.000	0.000	0.00
		C	0.000	0.000	23.725	0.000	0.19
T15	80'-73'3-31/32"	A	0.000	0.000	6.420	0.000	0.08
		B	0.000	0.000	0.000	0.000	0.00
		C	0.000	0.000	23.725	0.000	0.19
T16	73'3-31/32"-66'8-1/32"	A	0.000	0.000	6.420	0.000	0.08
		B	0.000	0.000	0.000	0.000	0.00
		C	0.000	0.000	23.725	0.000	0.19
T17	66'8-1/32"-60'	A	0.000	0.000	6.420	0.000	0.08
		B	0.000	0.000	0.000	0.000	0.00
		C	0.000	0.000	23.725	0.000	0.19
T18	60'-53'3-31/32"	A	0.000	0.000	6.420	0.000	0.08
		B	0.000	0.000	0.000	0.000	0.00
		C	0.000	0.000	23.725	0.000	0.19
T19	53'3-31/32"-46'8-1/32"	A	0.000	0.000	6.420	0.000	0.08
		B	0.000	0.000	0.000	0.000	0.00
		C	0.000	0.000	23.725	0.000	0.19
T20	46'8-1/32"-40'	A	0.000	0.000	6.420	0.000	0.08
		B	0.000	0.000	0.000	0.000	0.00
		C	0.000	0.000	23.725	0.000	0.19
T21	40'-30'	A	0.000	0.000	9.630	0.000	0.13
		B	0.000	0.000	0.000	0.000	0.00
		C	0.000	0.000	35.588	0.000	0.28
T22	30'-20'	A	0.000	0.000	9.630	0.000	0.13
		B	0.000	0.000	0.000	0.000	0.00
		C	0.000	0.000	35.588	0.000	0.28

Tower Section	Tower Elevation ft	Face	A_R ft^2	A_F ft^2	C_AA_A In Face ft^2	C_AA_A Out Face ft^2	Weight K
T23	20'-10'	A	0.000	0.000	9.630	0.000	0.13
		B	0.000	0.000	0.000	0.000	0.00
		C	0.000	0.000	35.588	0.000	0.28
T24	10'-0'	A	0.000	0.000	9.630	0.000	0.13
		B	0.000	0.000	0.000	0.000	0.00
		C	0.000	0.000	35.588	0.000	0.28

Feed Line/Linear Appurtenances Section Areas - With Ice

Tower Section	Tower Elevation ft	Face or Leg	Ice Thickness in	A_R ft^2	A_F ft^2	C_AA_A In Face ft^2	C_AA_A Out Face ft^2	Weight K
T1	172'-160'	A	1.499	0.000	0.000	0.000	0.000	0.00
		B		0.000	0.000	0.000	0.000	0.00
		C		0.000	0.000	8.019	0.000	0.09
T2	160'-140'	A	1.483	0.000	0.000	0.000	0.000	0.00
		B		0.000	0.000	0.000	0.000	0.00
		C		0.000	0.000	55.435	0.000	0.88
T3	140'-136'	A	1.471	0.000	0.000	0.000	0.000	0.00
		B		0.000	0.000	0.000	0.000	0.00
		C		0.000	0.000	11.040	0.000	0.17
T4	136'-132'	A	1.467	0.000	0.000	0.000	0.000	0.00
		B		0.000	0.000	0.000	0.000	0.00
		C		0.000	0.000	24.950	0.000	0.36
T5	132'-128'	A	1.462	0.000	0.000	0.000	0.000	0.00
		B		0.000	0.000	0.000	0.000	0.00
		C		0.000	0.000	29.561	0.000	0.43
T6	128'-124'	A	1.458	0.000	0.000	0.933	0.000	0.02
		B		0.000	0.000	0.000	0.000	0.00
		C		0.000	0.000	29.528	0.000	0.43
T7	124'-120'	A	1.453	0.000	0.000	1.862	0.000	0.03
		B		0.000	0.000	0.000	0.000	0.00
		C		0.000	0.000	29.495	0.000	0.42
T8	120'-115'	A	1.448	0.000	0.000	6.270	0.000	0.13
		B		0.000	0.000	0.000	0.000	0.00
		C		0.000	0.000	36.820	0.000	0.53
T9	115'-110'	A	1.441	0.000	0.000	11.119	0.000	0.18
		B		0.000	0.000	0.000	0.000	0.00
		C		0.000	0.000	36.764	0.000	0.53
T10	110'-105'	A	1.435	0.000	0.000	11.095	0.000	0.18
		B		0.000	0.000	0.000	0.000	0.00
		C		0.000	0.000	36.706	0.000	0.53
T11	105'-100'	A	1.428	0.000	0.000	11.070	0.000	0.18
		B		0.000	0.000	0.000	0.000	0.00
		C		0.000	0.000	36.645	0.000	0.52
T12	100'-93'3-31/32"	A	1.420	0.000	0.000	14.718	0.000	0.24
		B		0.000	0.000	0.000	0.000	0.00
		C		0.000	0.000	48.761	0.000	0.69
T13	93'3-31/32"-86'8-1/32"	A	1.410	0.000	0.000	14.668	0.000	0.24
		B		0.000	0.000	0.000	0.000	0.00
		C		0.000	0.000	48.640	0.000	0.69
T14	86'8-1/32"-80'	A	1.399	0.000	0.000	14.615	0.000	0.23
		B		0.000	0.000	0.000	0.000	0.00
		C		0.000	0.000	48.512	0.000	0.69
T15	80'-73'3-31/32"	A	1.387	0.000	0.000	14.558	0.000	0.23
		B		0.000	0.000	0.000	0.000	0.00
		C		0.000	0.000	48.374	0.000	0.68
T16	73'3-31/32"-66'8-1/32"	A	1.375	0.000	0.000	14.496	0.000	0.23
		B		0.000	0.000	0.000	0.000	0.00
		C		0.000	0.000	48.225	0.000	0.68
T17	66'8-1/32"-60'	A	1.361	0.000	0.000	14.428	0.000	0.23
		B		0.000	0.000	0.000	0.000	0.00
		C		0.000	0.000	48.062	0.000	0.67
T18	60'-53'3-31/32"	A	1.346	0.000	0.000	14.354	0.000	0.23
		B		0.000	0.000	0.000	0.000	0.00
		C		0.000	0.000	47.883	0.000	0.66

Tower Section	Tower Elevation ft	Face or Leg	Ice Thickness in	A_R ft²	A_F ft²	C_AA_A In Face ft²	C_AA_A Out Face ft²	Weight K
T19	53'3-31/32"-46'8-1/32"	A	1.329	0.000	0.000	14.271	0.000	0.22
		B		0.000	0.000	0.000	0.000	0.00
		C		0.000	0.000	47.685	0.000	0.66
T20	46'8-1/32"-40'	A	1.310	0.000	0.000	14.178	0.000	0.22
		B		0.000	0.000	0.000	0.000	0.00
		C		0.000	0.000	47.460	0.000	0.65
T21	40'-30'	A	1.283	0.000	0.000	21.063	0.000	0.33
		B		0.000	0.000	0.000	0.000	0.00
		C		0.000	0.000	70.698	0.000	0.96
T22	30'-20'	A	1.240	0.000	0.000	20.749	0.000	0.32
		B		0.000	0.000	0.000	0.000	0.00
		C		0.000	0.000	69.943	0.000	0.93
T23	20'-10'	A	1.178	0.000	0.000	20.293	0.000	0.31
		B		0.000	0.000	0.000	0.000	0.00
		C		0.000	0.000	68.845	0.000	0.90
T24	10'-0'	A	1.056	0.000	0.000	19.389	0.000	0.28
		B		0.000	0.000	0.000	0.000	0.00
		C		0.000	0.000	66.670	0.000	0.83

Feed Line Center of Pressure

Section	Elevation ft	CP_X in	CP_Z in	CP_X Ice in	CP_Z Ice in
T1	172'-160'	-0.733	0.476	-3.755	2.281
T2	160'-140'	-7.376	6.135	-9.590	7.097
T3	140'-136'	-6.664	5.548	-9.183	6.817
T4	136'-132'	2.290	7.059	1.897	8.985
T5	132'-128'	4.325	7.592	4.310	9.631
T6	128'-124'	4.258	6.758	4.219	8.418
T7	124'-120'	4.192	5.950	4.132	7.257
T8	120'-115'	3.820	3.408	3.747	4.658
T9	115'-110'	3.351	1.406	3.267	1.917
T10	110'-105'	3.829	1.578	3.687	2.136
T11	105'-100'	3.996	1.622	3.875	2.206
T12	100'-93'3-31/32"	4.436	1.778	4.275	2.398
T13	93'3-31/32"-86'8-1/32"	4.678	1.845	4.546	2.498
T14	86'8-1/32"-80'	4.910	1.909	4.811	2.591
T15	80'-73'3-31/32"	4.708	1.790	4.826	2.537
T16	73'3-31/32"-66'8-1/32"	4.892	1.839	5.065	2.613
T17	66'8-1/32"-60'	5.066	1.884	5.302	2.683
T18	60'-53'3-31/32"	5.232	1.928	5.537	2.748
T19	53'3-31/32"-46'8-1/32"	5.394	1.969	5.777	2.809
T20	46'8-1/32"-40'	5.546	2.008	6.018	2.864
T21	40'-30'	5.962	2.136	6.559	3.039
T22	30'-20'	6.184	2.193	6.988	3.106
T23	20'-10'	6.000	2.104	7.232	3.034
T24	10'-0'	6.199	2.158	7.916	2.974

Shielding Factor Ka

Tower Section	Feed Line Record No.	Description	Feed Line Segment Elev.	K_a No Ice	K_a Ice
T1	2	Step Pegs (5/8" SR) 7.5-in w/ 30" Step	160.00 - 172.00	0.6000	0.6000

Tower Section	Feed Line Record No.	Description	Feed Line Segment Elev.	K_a No Ice	K_a Ice
T1	3	Safety Line 3/8	160.00 - 172.00	0.6000	0.6000
T2	2	Step Pegs (5/8" SR) 7.5-in w/ 30" Step	140.00 - 160.00	0.6000	0.6000
T2	3	Safety Line 3/8	140.00 - 160.00	0.6000	0.6000
T2	12	LDF7-50A(1-5/8)	140.00 - 160.00	0.6000	0.6000
T2	13	Feedline Ladder (Af)	140.00 - 160.00	0.6000	0.6000
T3	2	Step Pegs (5/8" SR) 7.5-in w/ 30" Step	136.00 - 140.00	0.6000	0.6000
T3	3	Safety Line 3/8	136.00 - 140.00	0.6000	0.6000
T3	12	LDF7-50A(1-5/8)	136.00 - 140.00	0.6000	0.6000
T3	13	Feedline Ladder (Af)	136.00 - 140.00	0.6000	0.6000
T4	2	Step Pegs (5/8" SR) 7.5-in w/ 30" Step	132.00 - 136.00	0.6000	0.6000
T4	3	Safety Line 3/8	132.00 - 136.00	0.6000	0.6000
T4	8	HFT1208-24S26(1-1/4)	132.00 - 135.00	0.6000	0.6000
T4	9	LDF5-50A(7/8)	132.00 - 135.00	0.6000	0.6000
T4	10	Feedline Ladder (Af)	132.00 - 135.00	0.6000	0.6000
T4	12	LDF7-50A(1-5/8)	132.00 - 136.00	0.6000	0.6000
T4	13	Feedline Ladder (Af)	132.00 - 136.00	0.6000	0.6000
T5	2	Step Pegs (5/8" SR) 7.5-in w/ 30" Step	128.00 - 132.00	0.6000	0.6000
T5	3	Safety Line 3/8	128.00 - 132.00	0.6000	0.6000
T5	8	HFT1208-24S26(1-1/4)	128.00 - 132.00	0.6000	0.6000
T5	9	LDF5-50A(7/8)	128.00 - 132.00	0.6000	0.6000
T5	10	Feedline Ladder (Af)	128.00 - 132.00	0.6000	0.6000
T5	12	LDF7-50A(1-5/8)	128.00 - 132.00	0.6000	0.6000
T5	13	Feedline Ladder (Af)	128.00 - 132.00	0.6000	0.6000
T6	2	Step Pegs (5/8" SR) 7.5-in w/ 30" Step	124.00 - 128.00	0.6000	0.6000
T6	3	Safety Line 3/8	124.00 - 128.00	0.6000	0.6000
T6	8	HFT1208-24S26(1-1/4)	124.00 - 128.00	0.6000	0.6000
T6	9	LDF5-50A(7/8)	124.00 - 128.00	0.6000	0.6000
T6	10	Feedline Ladder (Af)	124.00 - 128.00	0.6000	0.6000
T6	12	LDF7-50A(1-5/8)	124.00 - 128.00	0.6000	0.6000
T6	13	Feedline Ladder (Af)	124.00 - 128.00	0.6000	0.6000
T6	15	CU12PSM6P4XXX(1-3/4)	124.00 - 126.00	0.6000	0.6000
T7	2	Step Pegs (5/8" SR) 7.5-in w/ 30" Step	120.00 - 124.00	0.6000	0.6000
T7	3	Safety Line 3/8	120.00 - 124.00	0.6000	0.6000
T7	8	HFT1208-24S26(1-1/4)	120.00 - 124.00	0.6000	0.6000
T7	9	LDF5-50A(7/8)	120.00 -	0.6000	0.6000

Tower Section	Feed Line Record No.	Description	Feed Line Segment Elev.	K_a No Ice	K_a Ice
T7	10	Feedline Ladder (Af)	124.00 120.00 - 124.00	0.6000	0.6000
T7	12	LDF7-50A(1-5/8)	120.00 - 124.00	0.6000	0.6000
T7	13	Feedline Ladder (Af)	120.00 - 124.00	0.6000	0.6000
T7	15	CU12PSM6P4XXX(1-3/4)	120.00 - 124.00	0.6000	0.6000
T8	2	Step Pegs (5/8" SR) 7.5-in w/ 30" Step	115.00 - 120.00	0.6000	0.6000
T8	3	Safety Line 3/8	115.00 - 120.00	0.6000	0.6000
T8	6	Feedline Ladder (Af)	115.00 - 120.00	0.6000	0.6000
T8	8	HFT1208-24S26(1-1/4)	115.00 - 120.00	0.6000	0.6000
T8	9	LDF5-50A(7/8)	115.00 - 120.00	0.6000	0.6000
T8	10	Feedline Ladder (Af)	115.00 - 120.00	0.6000	0.6000
T8	12	LDF7-50A(1-5/8)	115.00 - 120.00	0.6000	0.6000
T8	13	Feedline Ladder (Af)	115.00 - 120.00	0.6000	0.6000
T8	15	CU12PSM6P4XXX(1-3/4)	115.00 - 120.00	0.6000	0.6000
T9	2	Step Pegs (5/8" SR) 7.5-in w/ 30" Step	110.00 - 115.00	0.6000	0.6000
T9	3	Safety Line 3/8	110.00 - 115.00	0.6000	0.6000
T9	5	HF-T1L20F060SE(7/8)	110.00 - 115.00	0.6000	0.6000
T9	6	Feedline Ladder (Af)	110.00 - 115.00	0.6000	0.6000
T9	8	HFT1208-24S26(1-1/4)	110.00 - 115.00	0.6000	0.6000
T9	9	LDF5-50A(7/8)	110.00 - 115.00	0.6000	0.6000
T9	10	Feedline Ladder (Af)	110.00 - 115.00	0.6000	0.6000
T9	12	LDF7-50A(1-5/8)	110.00 - 115.00	0.6000	0.6000
T9	13	Feedline Ladder (Af)	110.00 - 115.00	0.6000	0.6000
T9	15	CU12PSM6P4XXX(1-3/4)	110.00 - 115.00	0.6000	0.6000
T10	2	Step Pegs (5/8" SR) 7.5-in w/ 30" Step	105.00 - 110.00	0.6000	0.6000
T10	3	Safety Line 3/8	105.00 - 110.00	0.6000	0.6000
T10	5	HF-T1L20F060SE(7/8)	105.00 - 110.00	0.6000	0.6000
T10	6	Feedline Ladder (Af)	105.00 - 110.00	0.6000	0.6000
T10	8	HFT1208-24S26(1-1/4)	105.00 - 110.00	0.6000	0.6000
T10	9	LDF5-50A(7/8)	105.00 - 110.00	0.6000	0.6000
T10	10	Feedline Ladder (Af)	105.00 - 110.00	0.6000	0.6000
T10	12	LDF7-50A(1-5/8)	105.00 - 110.00	0.6000	0.6000
T10	13	Feedline Ladder (Af)	105.00 - 110.00	0.6000	0.6000
T10	15	CU12PSM6P4XXX(1-3/4)	105.00 - 110.00	0.6000	0.6000
T11	2	Step Pegs (5/8" SR) 7.5-in w/ 30" Step	100.00 - 105.00	0.6000	0.6000

Tower Section	Feed Line Record No.	Description	Feed Line Segment Elev.	K_a No Ice	K_a Ice
T11	3	Safety Line 3/8	100.00 - 105.00	0.6000	0.6000
T11	5	HF-T1L20F060SE(7/8)	100.00 - 105.00	0.6000	0.6000
T11	6	Feedline Ladder (Af)	100.00 - 105.00	0.6000	0.6000
T11	8	HFT1208-24S26(1-1/4)	100.00 - 105.00	0.6000	0.6000
T11	9	LDF5-50A(7/8)	100.00 - 105.00	0.6000	0.6000
T11	10	Feedline Ladder (Af)	100.00 - 105.00	0.6000	0.6000
T11	12	LDF7-50A(1-5/8)	100.00 - 105.00	0.6000	0.6000
T11	13	Feedline Ladder (Af)	100.00 - 105.00	0.6000	0.6000
T11	15	CU12PSM6P4XXX(1-3/4)	100.00 - 105.00	0.6000	0.6000
T12	2	Step Pegs (5/8" SR) 7.5-in w/ 30" Step	93.33 - 100.00	0.6000	0.6000
T12	3	Safety Line 3/8	93.33 - 100.00	0.6000	0.6000
T12	5	HF-T1L20F060SE(7/8)	93.33 - 100.00	0.6000	0.6000
T12	6	Feedline Ladder (Af)	93.33 - 100.00	0.6000	0.6000
T12	8	HFT1208-24S26(1-1/4)	93.33 - 100.00	0.6000	0.6000
T12	9	LDF5-50A(7/8)	93.33 - 100.00	0.6000	0.6000
T12	10	Feedline Ladder (Af)	93.33 - 100.00	0.6000	0.6000
T12	12	LDF7-50A(1-5/8)	93.33 - 100.00	0.6000	0.6000
T12	13	Feedline Ladder (Af)	93.33 - 100.00	0.6000	0.6000
T12	15	CU12PSM6P4XXX(1-3/4)	93.33 - 100.00	0.6000	0.6000
T13	2	Step Pegs (5/8" SR) 7.5-in w/ 30" Step	86.67 - 93.33	0.6000	0.6000
T13	3	Safety Line 3/8	86.67 - 93.33	0.6000	0.6000
T13	5	HF-T1L20F060SE(7/8)	86.67 - 93.33	0.6000	0.6000
T13	6	Feedline Ladder (Af)	86.67 - 93.33	0.6000	0.6000
T13	8	HFT1208-24S26(1-1/4)	86.67 - 93.33	0.6000	0.6000
T13	9	LDF5-50A(7/8)	86.67 - 93.33	0.6000	0.6000
T13	10	Feedline Ladder (Af)	86.67 - 93.33	0.6000	0.6000
T13	12	LDF7-50A(1-5/8)	86.67 - 93.33	0.6000	0.6000
T13	13	Feedline Ladder (Af)	86.67 - 93.33	0.6000	0.6000
T13	15	CU12PSM6P4XXX(1-3/4)	86.67 - 93.33	0.6000	0.6000
T14	2	Step Pegs (5/8" SR) 7.5-in w/ 30" Step	80.00 - 86.67	0.6000	0.6000
T14	3	Safety Line 3/8	80.00 - 86.67	0.6000	0.6000
T14	5	HF-T1L20F060SE(7/8)	80.00 - 86.67	0.6000	0.6000
T14	6	Feedline Ladder (Af)	80.00 - 86.67	0.6000	0.6000
T14	8	HFT1208-24S26(1-1/4)	80.00 - 86.67	0.6000	0.6000
T14	9	LDF5-50A(7/8)	80.00 -	0.6000	0.6000

Tower Section	Feed Line Record No.	Description	Feed Line Segment Elev.	K_a No Ice	K_a Ice
			86.67		
T14	10	Feedline Ladder (Af)	80.00 - 86.67	0.6000	0.6000
T14	12	LDF7-50A(1-5/8)	80.00 - 86.67	0.6000	0.6000
T14	13	Feedline Ladder (Af)	80.00 - 86.67	0.6000	0.6000
T14	15	CU12PSM6P4XXX(1-3/4)	80.00 - 86.67	0.6000	0.6000
T15	2	Step Pegs (5/8" SR) 7.5-in w/ 30" Step	73.33 - 80.00	0.6000	0.6000
T15	3	Safety Line 3/8	73.33 - 80.00	0.6000	0.6000
T15	5	HF-T1L20F060SE(7/8)	73.33 - 80.00	0.6000	0.6000
T15	6	Feedline Ladder (Af)	73.33 - 80.00	0.6000	0.6000
T15	8	HFT1208-24S26(1-1/4)	73.33 - 80.00	0.6000	0.6000
T15	9	LDF5-50A(7/8)	73.33 - 80.00	0.6000	0.6000
T15	10	Feedline Ladder (Af)	73.33 - 80.00	0.6000	0.6000
T15	12	LDF7-50A(1-5/8)	73.33 - 80.00	0.6000	0.6000
T15	13	Feedline Ladder (Af)	73.33 - 80.00	0.6000	0.6000
T15	15	CU12PSM6P4XXX(1-3/4)	73.33 - 80.00	0.6000	0.6000
T16	2	Step Pegs (5/8" SR) 7.5-in w/ 30" Step	66.67 - 73.33	0.6000	0.6000
T16	3	Safety Line 3/8	66.67 - 73.33	0.6000	0.6000
T16	5	HF-T1L20F060SE(7/8)	66.67 - 73.33	0.6000	0.6000
T16	6	Feedline Ladder (Af)	66.67 - 73.33	0.6000	0.6000
T16	8	HFT1208-24S26(1-1/4)	66.67 - 73.33	0.6000	0.6000
T16	9	LDF5-50A(7/8)	66.67 - 73.33	0.6000	0.6000
T16	10	Feedline Ladder (Af)	66.67 - 73.33	0.6000	0.6000
T16	12	LDF7-50A(1-5/8)	66.67 - 73.33	0.6000	0.6000
T16	13	Feedline Ladder (Af)	66.67 - 73.33	0.6000	0.6000
T16	15	CU12PSM6P4XXX(1-3/4)	66.67 - 73.33	0.6000	0.6000
T17	2	Step Pegs (5/8" SR) 7.5-in w/ 30" Step	60.00 - 66.67	0.6000	0.6000
T17	3	Safety Line 3/8	60.00 - 66.67	0.6000	0.6000
T17	5	HF-T1L20F060SE(7/8)	60.00 - 66.67	0.6000	0.6000
T17	6	Feedline Ladder (Af)	60.00 - 66.67	0.6000	0.6000
T17	8	HFT1208-24S26(1-1/4)	60.00 - 66.67	0.6000	0.6000
T17	9	LDF5-50A(7/8)	60.00 - 66.67	0.6000	0.6000
T17	10	Feedline Ladder (Af)	60.00 - 66.67	0.6000	0.6000
T17	12	LDF7-50A(1-5/8)	60.00 - 66.67	0.6000	0.6000
T17	13	Feedline Ladder (Af)	60.00 - 66.67	0.6000	0.6000
T17	15	CU12PSM6P4XXX(1-3/4)	60.00 - 66.67	0.6000	0.6000

Tower Section	Feed Line Record No.	Description	Feed Line Segment Elev.	K_a No Ice	K_a Ice
T18	2	Step Pegs (5/8" SR) 7.5-in w/ 30" Step	53.33 - 60.00	0.6000	0.6000
T18	3	Safety Line 3/8	53.33 - 60.00	0.6000	0.6000
T18	5	HF-T1L20F060SE(7/8)	53.33 - 60.00	0.6000	0.6000
T18	6	Feedline Ladder (Af)	53.33 - 60.00	0.6000	0.6000
T18	8	HFT1208-24S26(1-1/4)	53.33 - 60.00	0.6000	0.6000
T18	9	LDF5-50A(7/8)	53.33 - 60.00	0.6000	0.6000
T18	10	Feedline Ladder (Af)	53.33 - 60.00	0.6000	0.6000
T18	12	LDF7-50A(1-5/8)	53.33 - 60.00	0.6000	0.6000
T18	13	Feedline Ladder (Af)	53.33 - 60.00	0.6000	0.6000
T18	15	CU12PSM6P4XXX(1-3/4)	53.33 - 60.00	0.6000	0.6000
T19	2	Step Pegs (5/8" SR) 7.5-in w/ 30" Step	46.67 - 53.33	0.6000	0.6000
T19	3	Safety Line 3/8	46.67 - 53.33	0.6000	0.6000
T19	5	HF-T1L20F060SE(7/8)	46.67 - 53.33	0.6000	0.6000
T19	6	Feedline Ladder (Af)	46.67 - 53.33	0.6000	0.6000
T19	8	HFT1208-24S26(1-1/4)	46.67 - 53.33	0.6000	0.6000
T19	9	LDF5-50A(7/8)	46.67 - 53.33	0.6000	0.6000
T19	10	Feedline Ladder (Af)	46.67 - 53.33	0.6000	0.6000
T19	12	LDF7-50A(1-5/8)	46.67 - 53.33	0.6000	0.6000
T19	13	Feedline Ladder (Af)	46.67 - 53.33	0.6000	0.6000
T19	15	CU12PSM6P4XXX(1-3/4)	46.67 - 53.33	0.6000	0.6000
T20	2	Step Pegs (5/8" SR) 7.5-in w/ 30" Step	40.00 - 46.67	0.6000	0.6000
T20	3	Safety Line 3/8	40.00 - 46.67	0.6000	0.6000
T20	5	HF-T1L20F060SE(7/8)	40.00 - 46.67	0.6000	0.6000
T20	6	Feedline Ladder (Af)	40.00 - 46.67	0.6000	0.6000
T20	8	HFT1208-24S26(1-1/4)	40.00 - 46.67	0.6000	0.6000
T20	9	LDF5-50A(7/8)	40.00 - 46.67	0.6000	0.6000
T20	10	Feedline Ladder (Af)	40.00 - 46.67	0.6000	0.6000
T20	12	LDF7-50A(1-5/8)	40.00 - 46.67	0.6000	0.6000
T20	13	Feedline Ladder (Af)	40.00 - 46.67	0.6000	0.6000
T20	15	CU12PSM6P4XXX(1-3/4)	40.00 - 46.67	0.6000	0.6000
T21	2	Step Pegs (5/8" SR) 7.5-in w/ 30" Step	30.00 - 40.00	0.6000	0.6000
T21	3	Safety Line 3/8	30.00 - 40.00	0.6000	0.6000
T21	5	HF-T1L20F060SE(7/8)	30.00 - 40.00	0.6000	0.6000
T21	6	Feedline Ladder (Af)	30.00 - 40.00	0.6000	0.6000
T21	8	HFT1208-24S26(1-1/4)	30.00 -	0.6000	0.6000

Tower Section	Feed Line Record No.	Description	Feed Line Segment Elev.	K_a No Ice	K_a Ice
T21	9	LDF5-50A(7/8)	40.00 30.00 - 40.00	0.6000	0.6000
T21	10	Feedline Ladder (Af)	30.00 - 40.00	0.6000	0.6000
T21	12	LDF7-50A(1-5/8)	30.00 - 40.00	0.6000	0.6000
T21	13	Feedline Ladder (Af)	30.00 - 40.00	0.6000	0.6000
T21	15	CU12PSM6P4XXX(1-3/4)	30.00 - 40.00	0.6000	0.6000
T22	2	Step Pegs (5/8" SR) 7.5-in w/ 30" Step	20.00 - 30.00	0.6000	0.6000
T22	3	Safety Line 3/8	20.00 - 30.00	0.6000	0.6000
T22	5	HF-T1L20F060SE(7/8)	20.00 - 30.00	0.6000	0.6000
T22	6	Feedline Ladder (Af)	20.00 - 30.00	0.6000	0.6000
T22	8	HFT1208-24S26(1-1/4)	20.00 - 30.00	0.6000	0.6000
T22	9	LDF5-50A(7/8)	20.00 - 30.00	0.6000	0.6000
T22	10	Feedline Ladder (Af)	20.00 - 30.00	0.6000	0.6000
T22	12	LDF7-50A(1-5/8)	20.00 - 30.00	0.6000	0.6000
T22	13	Feedline Ladder (Af)	20.00 - 30.00	0.6000	0.6000
T22	15	CU12PSM6P4XXX(1-3/4)	20.00 - 30.00	0.6000	0.6000
T23	2	Step Pegs (5/8" SR) 7.5-in w/ 30" Step	10.00 - 20.00	0.6000	0.6000
T23	3	Safety Line 3/8	10.00 - 20.00	0.6000	0.6000
T23	5	HF-T1L20F060SE(7/8)	10.00 - 20.00	0.6000	0.6000
T23	6	Feedline Ladder (Af)	10.00 - 20.00	0.6000	0.6000
T23	8	HFT1208-24S26(1-1/4)	10.00 - 20.00	0.6000	0.6000
T23	9	LDF5-50A(7/8)	10.00 - 20.00	0.6000	0.6000
T23	10	Feedline Ladder (Af)	10.00 - 20.00	0.6000	0.6000
T23	12	LDF7-50A(1-5/8)	10.00 - 20.00	0.6000	0.6000
T23	13	Feedline Ladder (Af)	10.00 - 20.00	0.6000	0.6000
T23	15	CU12PSM6P4XXX(1-3/4)	10.00 - 20.00	0.6000	0.6000
T24	2	Step Pegs (5/8" SR) 7.5-in w/ 30" Step	0.00 - 10.00	0.6000	0.6000
T24	3	Safety Line 3/8	0.00 - 10.00	0.6000	0.6000
T24	5	HF-T1L20F060SE(7/8)	0.00 - 10.00	0.6000	0.6000
T24	6	Feedline Ladder (Af)	0.00 - 10.00	0.6000	0.6000
T24	8	HFT1208-24S26(1-1/4)	0.00 - 10.00	0.6000	0.6000
T24	9	LDF5-50A(7/8)	0.00 - 10.00	0.6000	0.6000
T24	10	Feedline Ladder (Af)	0.00 - 10.00	0.6000	0.6000
T24	12	LDF7-50A(1-5/8)	0.00 - 10.00	0.6000	0.6000
T24	13	Feedline Ladder (Af)	0.00 - 10.00	0.6000	0.6000
T24	15	CU12PSM6P4XXX(1-3/4)	0.00 - 10.00	0.6000	0.6000

Discrete Tower Loads

Description	Face or Leg	Offset Type	Offsets: Horz Lateral Vert ft ft ft	Azimuth Adjustment °	Placement ft		C_AA_A Front ft^2	C_AA_A Side ft^2	Weight K
4' x 2" Pipe Mount	C	From Leg	0.00	0.000	172'	No Ice	0.79	0.79	0.03
			0'			1/2" Ice	1.03	1.03	0.04
			2'			1" Ice	1.28	1.28	0.04
						2" Ice	1.81	1.81	0.07
***									
(2) 7200.01 w/ Mount Pipe	A	From Face	0.50	0.000	160'	No Ice	3.04	2.81	0.04
			0'			1/2" Ice	3.60	3.37	0.07
			0'			1" Ice	4.18	3.95	0.12
						2" Ice	5.38	5.14	0.24
(3) 7200.09 w/ Mount Pipe	B	From Face	0.50	0.000	160'	No Ice	3.04	2.81	0.04
			0'			1/2" Ice	3.60	3.37	0.07
			0'			1" Ice	4.18	3.95	0.12
						2" Ice	5.38	5.14	0.24
(3) 7200.09 w/ Mount Pipe	C	From Face	0.50	0.000	160'	No Ice	3.04	2.81	0.04
			0'			1/2" Ice	3.60	3.37	0.07
			0'			1" Ice	4.18	3.95	0.12
						2" Ice	5.38	5.14	0.24
1-5/8"x1-5/8" Unistrut (12-ft Horizontal)	A	From Face	0.25	0.000	160'	No Ice	1.95	0.02	0.01
			0'			1/2" Ice	2.76	0.04	0.03
			0'			1" Ice	3.58	0.07	0.06
						2" Ice	5.25	0.15	0.15
1-5/8"x1-5/8" Unistrut (12-ft Horizontal)	B	From Face	0.25	0.000	160'	No Ice	1.95	0.02	0.01
			0'			1/2" Ice	2.76	0.04	0.03
			0'			1" Ice	3.58	0.07	0.06
						2" Ice	5.25	0.15	0.15
1-5/8"x1-5/8" Unistrut (12-ft Horizontal)	C	From Face	0.25	0.000	160'	No Ice	1.95	0.02	0.01
			0'			1/2" Ice	2.76	0.04	0.03
			0'			1" Ice	3.58	0.07	0.06
						2" Ice	5.25	0.15	0.15
6' x 2" Mount Pipe	A	From Face	0.50	0.000	160'	No Ice	1.43	1.43	0.02
			0'			1/2" Ice	1.92	1.92	0.03
			0'			1" Ice	2.29	2.29	0.05
						2" Ice	3.06	3.06	0.09
***									
(3) SBNHH-1D65C w/ Mount Pipe	A	From Leg	4.00	0.000	135'	No Ice	5.56	4.47	0.08
			0'			1/2" Ice	6.07	4.97	0.16
			1'			1" Ice	6.59	5.48	0.26
						2" Ice	7.66	6.52	0.49
(3) SBNHH-1D65C w/ Mount Pipe	B	From Leg	4.00	0.000	135'	No Ice	5.56	4.47	0.08
			0'			1/2" Ice	6.07	4.97	0.16
			1'			1" Ice	6.59	5.48	0.26
						2" Ice	7.66	6.52	0.49
(3) SBNHH-1D65C w/ Mount Pipe	C	From Leg	4.00	0.000	135'	No Ice	5.56	4.47	0.08
			0'			1/2" Ice	6.07	4.97	0.16
			1'			1" Ice	6.59	5.48	0.26
						2" Ice	7.66	6.52	0.49
RC3DC-3315-PF-48	A	From Leg	4.00	0.000	135'	No Ice	3.79	2.51	0.03
			0'			1/2" Ice	4.04	2.72	0.06
			0'			1" Ice	4.30	2.94	0.10
						2" Ice	4.84	3.41	0.18

Description	Face or Leg	Offset Type	Offsets: Horz Lateral Vert ft ft ft	Azimuth Adjustment °	Placement ft		C_AA_A Front ft^2	C_AA_A Side ft^2	Weight K
RC3DC-3315-PF-48	B	From Leg	4.00 0' 0'	0.000	135'	No Ice 1/2" Ice 1" Ice 2" Ice	3.79 4.04 4.30 4.84	2.51 2.72 2.94 3.41	0.03 0.06 0.10 0.18
RC3DC-3315-PF-48	C	From Leg	4.00 0' 0'	0.000	135'	No Ice 1/2" Ice 1" Ice 2" Ice	3.79 4.04 4.30 4.84	2.51 2.72 2.94 3.41	0.03 0.06 0.10 0.18
Sub6 Antenna w/ Mount Pipe	A	From Leg	4.00 0' 2'	0.000	135'	No Ice 1/2" Ice 1" Ice 2" Ice	4.23 4.56 4.89 5.58	2.88 3.30 3.75 4.69	0.09 0.13 0.18 0.28
Sub6 Antenna w/ Mount Pipe	B	From Leg	4.00 0' 2'	0.000	135'	No Ice 1/2" Ice 1" Ice 2" Ice	4.23 4.56 4.89 5.58	2.88 3.30 3.75 4.69	0.09 0.13 0.18 0.28
Sub6 Antenna w/ Mount Pipe	C	From Leg	4.00 0' 2'	0.000	135'	No Ice 1/2" Ice 1" Ice 2" Ice	4.23 4.56 4.89 5.58	2.88 3.30 3.75 4.69	0.09 0.13 0.18 0.28
4449	A	From Leg	4.00 0' 0'	0.000	135'	No Ice 1/2" Ice 1" Ice 2" Ice	1.97 2.15 2.33 2.72	1.40 1.56 1.72 2.07	0.07 0.09 0.11 0.16
4449	B	From Leg	4.00 0' 0'	0.000	135'	No Ice 1/2" Ice 1" Ice 2" Ice	1.97 2.15 2.33 2.72	1.40 1.56 1.72 2.07	0.07 0.09 0.11 0.16
4449	C	From Leg	4.00 0' 0'	0.000	135'	No Ice 1/2" Ice 1" Ice 2" Ice	1.97 2.15 2.33 2.72	1.40 1.56 1.72 2.07	0.07 0.09 0.11 0.16
8843	A	From Leg	4.00 0' 0'	0.000	135'	No Ice 1/2" Ice 1" Ice 2" Ice	1.65 1.81 1.98 2.34	1.36 1.51 1.67 2.00	0.07 0.09 0.11 0.16
8843	B	From Leg	4.00 0' 0'	0.000	135'	No Ice 1/2" Ice 1" Ice 2" Ice	1.65 1.81 1.98 2.34	1.36 1.51 1.67 2.00	0.07 0.09 0.11 0.16
8843	C	From Leg	4.00 0' 0'	0.000	135'	No Ice 1/2" Ice 1" Ice 2" Ice	1.65 1.81 1.98 2.34	1.36 1.51 1.67 2.00	0.07 0.09 0.11 0.16
(1) Site Pro 1 VFA12-RRU Sector Mount	A	From Leg	2.00 0' 0'	0.000	135'	No Ice 1/2" Ice 1" Ice 2" Ice	12.02 17.63 23.07 34.46	7.98 11.95 15.72 23.86	0.45 0.58 0.77 0.97
(1) Site Pro 1 VFA12-RRU Sector Mount	B	From Leg	2.00 0' 0'	0.000	135'	No Ice 1/2" Ice 1" Ice 2" Ice	12.02 17.63 23.07 34.46	7.98 11.95 15.72 23.86	0.45 0.58 0.77 0.97

Description	Face or Leg	Offset Type	Offsets: Horz Lateral Vert ft ft ft	Azimuth Adjustment °	Placement ft		C_AA_A Front ft^2	C_AA_A Side ft^2	Weight K
(1) Site Pro 1 VFA12-RRU Sector Mount	C	From Leg	2.00 0' 0'	0.000	135'	No Ice 1/2" Ice 1" Ice 2" Ice	12.02 17.63 23.07 34.46	7.98 11.95 15.72 23.86	0.45 0.58 0.77 0.97
(2) L2.5x2.5x5/16x54" (Horizontal)	A	From Leg	2.00 0' 0'	0.000	135'	No Ice 1/2" Ice 1" Ice 2" Ice	1.13 1.44 1.77 2.44	0.05 0.08 0.12 0.22	0.02 0.03 0.05 0.09
(2) L2.5x2.5x5/16x54" (Horizontal)	B	From Leg	2.00 0' 0'	0.000	135'	No Ice 1/2" Ice 1" Ice 2" Ice	1.13 1.44 1.77 2.44	0.05 0.08 0.12 0.22	0.02 0.03 0.05 0.09
(2) L2.5x2.5x5/16x54" (Horizontal)	C	From Leg	2.00 0' 0'	0.000	135'	No Ice 1/2" Ice 1" Ice 2" Ice	1.13 1.44 1.77 2.44	0.05 0.08 0.12 0.22	0.02 0.03 0.05 0.09
2.4" x 12' Stabilizer	A	From Leg	4.00 0' 0'	0.000	135'	No Ice 1/2" Ice 1" Ice 2" Ice	2.88 4.11 5.35 7.62	2.88 4.11 5.35 7.62	0.04 0.07 0.09 0.18
2.4" x 12' Stabilizer	B	From Leg	4.00 0' 0'	0.000	135'	No Ice 1/2" Ice 1" Ice 2" Ice	2.88 4.11 5.35 7.62	2.88 4.11 5.35 7.62	0.04 0.07 0.09 0.18
2.4" x 12' Stabilizer	C	From Leg	4.00 0' 0'	0.000	135'	No Ice 1/2" Ice 1" Ice 2" Ice	2.88 4.11 5.35 7.62	2.88 4.11 5.35 7.62	0.04 0.07 0.09 0.18
***									
MX08FRO665-21 w/ Mount Pipe	A	From Leg	4.00 0' 0'	0.000	126'	No Ice 1/2" Ice 1" Ice 2" Ice	8.01 8.52 9.04 10.11	4.23 4.69 5.16 6.12	0.11 0.19 0.29 0.52
MX08FRO665-21 w/ Mount Pipe	B	From Leg	4.00 0' 0'	0.000	126'	No Ice 1/2" Ice 1" Ice 2" Ice	8.01 8.52 9.04 10.11	4.23 4.69 5.16 6.12	0.11 0.19 0.29 0.52
MX08FRO665-21 w/ Mount Pipe	C	From Leg	4.00 0' 0'	0.000	126'	No Ice 1/2" Ice 1" Ice 2" Ice	8.01 8.52 9.04 10.11	4.23 4.69 5.16 6.12	0.11 0.19 0.29 0.52
TA08025-B604	A	From Leg	4.00 0' 0'	0.000	126'	No Ice 1/2" Ice 1" Ice 2" Ice	1.96 2.14 2.32 2.71	0.98 1.11 1.25 1.55	0.06 0.08 0.10 0.15
TA08025-B604	B	From Leg	4.00 0' 0'	0.000	126'	No Ice 1/2" Ice 1" Ice 2" Ice	1.96 2.14 2.32 2.71	0.98 1.11 1.25 1.55	0.06 0.08 0.10 0.15
TA08025-B604	C	From Leg	4.00 0' 0'	0.000	126'	No Ice 1/2" Ice 1" Ice	1.96 2.14 2.32 2.71	0.98 1.11 1.25 1.55	0.06 0.08 0.10 0.15

Description	Face or Leg	Offset Type	Offsets: Horz Lateral Vert ft ft ft	Azimuth Adjustment °	Placement ft		C_AA_A Front ft^2	C_AA_A Side ft^2	Weight K
						2" Ice			
TA08025-B605	A	From Leg	4.00	0.000	126'	No Ice	1.96	1.13	0.08
			0'			1/2"	2.14	1.27	0.09
			0'			Ice	2.32	1.41	0.11
						1" Ice	2.71	1.72	0.16
						2" Ice			
TA08025-B605	B	From Leg	4.00	0.000	126'	No Ice	1.96	1.13	0.08
			0'			1/2"	2.14	1.27	0.09
			0'			Ice	2.32	1.41	0.11
						1" Ice	2.71	1.72	0.16
						2" Ice			
TA08025-B605	C	From Leg	4.00	0.000	126'	No Ice	1.96	1.13	0.08
			0'			1/2"	2.14	1.27	0.09
			0'			Ice	2.32	1.41	0.11
						1" Ice	2.71	1.72	0.16
						2" Ice			
RDIDC-9181-PF-48	A	From Leg	4.00	0.000	126'	No Ice	2.31	1.29	0.02
			0'			1/2"	2.50	1.45	0.04
			0'			Ice	2.70	1.61	0.06
						1" Ice	3.12	1.96	0.12
						2" Ice			
Commscope MTC3975083 (3)	C	None		0.000	126'	No Ice	23.85	23.85	1.26
						1/2"	34.12	34.12	1.80
						Ice	44.39	44.39	2.35
						1" Ice	64.93	64.93	3.43
						2" Ice			
(2) 8' x 2" Mount Pipe	A	From Leg	4.00	0.000	126'	No Ice	1.90	1.90	0.03
			0'			1/2"	2.73	2.73	0.04
			0'			Ice	3.40	3.40	0.06
						1" Ice	4.40	4.40	0.12
						2" Ice			
(2) 8' x 2" Mount Pipe	B	From Leg	4.00	0.000	126'	No Ice	1.90	1.90	0.03
			0'			1/2"	2.73	2.73	0.04
			0'			Ice	3.40	3.40	0.06
						1" Ice	4.40	4.40	0.12
						2" Ice			
(2) 8' x 2" Mount Pipe	C	From Leg	4.00	0.000	126'	No Ice	1.90	1.90	0.03
			0'			1/2"	2.73	2.73	0.04
			0'			Ice	3.40	3.40	0.06
						1" Ice	4.40	4.40	0.12
						2" Ice			
***									
NLITE 155 ODU	B	From Face	1.00	0.000	120'	No Ice	0.75	0.38	0.01
			0'			1/2"	0.86	0.46	0.02
			0'			Ice	0.98	0.55	0.02
						1" Ice	1.23	0.76	0.05
						2" Ice			
Pipe Mount [PM601-1]	B	From Leg	0.50	0.000	120'	No Ice	1.32	1.32	0.07
			0'			1/2"	1.58	1.58	0.08
			0'			Ice	1.84	1.84	0.09
						1" Ice	2.40	2.40	0.13
						2" Ice			
***									
ET-X-TS-70-15-62-18-IR-RD w/ Mount Pipe	A	From Leg	4.00	0.000	115'	No Ice	4.61	3.27	0.07
			0'			1/2"	5.05	3.69	0.13
			1'			Ice	5.51	4.12	0.20
						1" Ice	6.44	5.02	0.38
						2" Ice			
ET-X-TS-70-15-62-18-IR-RD w/ Mount Pipe	C	From Leg	4.00	0.000	115'	No Ice	4.61	3.27	0.07
			0'			1/2"	5.05	3.69	0.13
			1'			Ice	5.51	4.12	0.20
						1" Ice	6.44	5.02	0.38
						2" Ice			
ET-X-TS-70-15-62-18-IR-RD w/ Mount Pipe	B	From Leg	4.00	0.000	115'	No Ice	4.61	3.27	0.07
			0'			1/2"	5.05	3.69	0.13

Description	Face or Leg	Offset Type	Offsets: Horz Lateral Vert ft ft ft	Azimuth Adjustment °	Placement ft		C_AA_A Front ft^2	C_AA_A Side ft^2	Weight K
			1'			Ice	5.51	4.12	0.20
						1" Ice	6.44	5.02	0.38
						2" Ice			
RRH-P4 Ph1	A	From Leg	4.00	0.000	115'	No Ice	2.25	1.05	0.06
			0'			1/2"	2.44	1.19	0.08
			1'			Ice	2.63	1.34	0.10
						1" Ice	3.04	1.66	0.15
						2" Ice			
RRH-P4 Ph1	B	From Leg	4.00	0.000	115'	No Ice	2.25	1.05	0.06
			0'			1/2"	2.44	1.19	0.08
			1'			Ice	2.63	1.34	0.10
						1" Ice	3.04	1.66	0.15
						2" Ice			
RRH-P4 Ph1	C	From Leg	4.00	0.000	115'	No Ice	2.25	1.05	0.06
			0'			1/2"	2.44	1.19	0.08
			1'			Ice	2.63	1.34	0.10
						1" Ice	3.04	1.66	0.15
						2" Ice			
RRH-C2A W/ EXT FILTER_CCIV2	A	From Leg	4.00	0.000	115'	No Ice	3.07	1.36	0.06
			0'			1/2"	3.30	1.53	0.09
			1'			Ice	3.52	1.70	0.11
						1" Ice	4.00	2.06	0.17
						2" Ice			
RRH-C2A W/ EXT FILTER_CCIV2	B	From Leg	4.00	0.000	115'	No Ice	3.07	1.36	0.06
			0'			1/2"	3.30	1.53	0.09
			1'			Ice	3.52	1.70	0.11
						1" Ice	4.00	2.06	0.17
						2" Ice			
RRH-C2A W/ EXT FILTER_CCIV2	C	From Leg	4.00	0.000	115'	No Ice	3.07	1.36	0.06
			0'			1/2"	3.30	1.53	0.09
			1'			Ice	3.52	1.70	0.11
						1" Ice	4.00	2.06	0.17
						2" Ice			
Sector Mount [SM411-3]	C	None		0.000	115'	No Ice	20.53	20.53	1.07
						1/2"	28.62	28.62	1.46
						Ice	36.63	36.63	1.97
						1" Ice	52.73	52.73	3.37
						2" Ice			
(3) 6' x 2" Mount Pipe	A	From Leg	4.00	0.000	115'	No Ice	1.43	1.43	0.02
			0'			1/2"	1.92	1.92	0.03
			0'			Ice	2.29	2.29	0.05
						1" Ice	3.06	3.06	0.09
						2" Ice			
(3) 6' x 2" Mount Pipe	B	From Leg	4.00	0.000	115'	No Ice	1.43	1.43	0.02
			0'			1/2"	1.92	1.92	0.03
			0'			Ice	2.29	2.29	0.05
						1" Ice	3.06	3.06	0.09
						2" Ice			
(3) 6' x 2" Mount Pipe	C	From Leg	4.00	0.000	115'	No Ice	1.43	1.43	0.02
			0'			1/2"	1.92	1.92	0.03
			0'			Ice	2.29	2.29	0.05
						1" Ice	3.06	3.06	0.09
						2" Ice			
***									
***									

Dishes

Description	Face or Leg	Dish Type	Offset Type	Offsets: Horz Lateral Vert ft	Azimuth Adjustment °	3 dB Beam Width °	Elevation ft	Outside Diameter ft		Aperture Area ft^2	Weight K
VHLP1-220	B	Paraboloid w/Shroud (HP)	From Leg	1.00 0' 0'	40.000		120'	1.29	No Ice 1/2" Ice 1" Ice 2" Ice	0.79 0.92 1.06 1.33	0.02 0.04 0.06 0.09
***											
***											

Load Combinations

Comb. No.	Description
1	Dead Only
2	1.2 Dead+1.0 Wind 0 deg - No Ice
3	0.9 Dead+1.0 Wind 0 deg - No Ice
4	1.2 Dead+1.0 Wind 30 deg - No Ice
5	0.9 Dead+1.0 Wind 30 deg - No Ice
6	1.2 Dead+1.0 Wind 60 deg - No Ice
7	0.9 Dead+1.0 Wind 60 deg - No Ice
8	1.2 Dead+1.0 Wind 90 deg - No Ice
9	0.9 Dead+1.0 Wind 90 deg - No Ice
10	1.2 Dead+1.0 Wind 120 deg - No Ice
11	0.9 Dead+1.0 Wind 120 deg - No Ice
12	1.2 Dead+1.0 Wind 150 deg - No Ice
13	0.9 Dead+1.0 Wind 150 deg - No Ice
14	1.2 Dead+1.0 Wind 180 deg - No Ice
15	0.9 Dead+1.0 Wind 180 deg - No Ice
16	1.2 Dead+1.0 Wind 210 deg - No Ice
17	0.9 Dead+1.0 Wind 210 deg - No Ice
18	1.2 Dead+1.0 Wind 240 deg - No Ice
19	0.9 Dead+1.0 Wind 240 deg - No Ice
20	1.2 Dead+1.0 Wind 270 deg - No Ice
21	0.9 Dead+1.0 Wind 270 deg - No Ice
22	1.2 Dead+1.0 Wind 300 deg - No Ice
23	0.9 Dead+1.0 Wind 300 deg - No Ice
24	1.2 Dead+1.0 Wind 330 deg - No Ice
25	0.9 Dead+1.0 Wind 330 deg - No Ice
26	1.2 Dead+1.0 Ice+1.0 Temp
27	1.2 Dead+1.0 Wind 0 deg+1.0 Ice+1.0 Temp
28	1.2 Dead+1.0 Wind 30 deg+1.0 Ice+1.0 Temp
29	1.2 Dead+1.0 Wind 60 deg+1.0 Ice+1.0 Temp
30	1.2 Dead+1.0 Wind 90 deg+1.0 Ice+1.0 Temp
31	1.2 Dead+1.0 Wind 120 deg+1.0 Ice+1.0 Temp
32	1.2 Dead+1.0 Wind 150 deg+1.0 Ice+1.0 Temp
33	1.2 Dead+1.0 Wind 180 deg+1.0 Ice+1.0 Temp
34	1.2 Dead+1.0 Wind 210 deg+1.0 Ice+1.0 Temp
35	1.2 Dead+1.0 Wind 240 deg+1.0 Ice+1.0 Temp
36	1.2 Dead+1.0 Wind 270 deg+1.0 Ice+1.0 Temp
37	1.2 Dead+1.0 Wind 300 deg+1.0 Ice+1.0 Temp
38	1.2 Dead+1.0 Wind 330 deg+1.0 Ice+1.0 Temp
39	Dead+Wind 0 deg - Service
40	Dead+Wind 30 deg - Service
41	Dead+Wind 60 deg - Service
42	Dead+Wind 90 deg - Service
43	Dead+Wind 120 deg - Service
44	Dead+Wind 150 deg - Service
45	Dead+Wind 180 deg - Service
46	Dead+Wind 210 deg - Service
47	Dead+Wind 240 deg - Service
48	Dead+Wind 270 deg - Service
49	Dead+Wind 300 deg - Service
50	Dead+Wind 330 deg - Service

Maximum Member Forces

Section No.	Elevation ft	Component Type	Condition	Gov. Load Comb.	Axial K	Major Axis Moment kip-ft	Minor Axis Moment kip-ft
T1	172 - 160	Leg	Max Tension	23	0.48	0.00	0.00
			Max. Compression	18	-0.82	0.02	-0.01
			Max. Mx	8	-0.11	-0.03	-0.00
			Max. My	4	-0.11	-0.01	0.03
			Max. Vy	8	-0.03	-0.03	-0.00
			Max. Vx	3	0.03	0.00	0.00
		Diagonal	Max Tension	14	0.29	0.00	0.00
			Max. Compression	2	-0.33	0.00	0.00
			Max. Mx	27	0.03	0.01	0.00
			Max. My	24	-0.26	0.00	0.00
			Max. Vy	27	-0.02	0.01	0.00
			Max. Vx	24	-0.00	0.00	0.00
		Top Girt	Max Tension	15	0.03	0.00	0.00
			Max. Compression	18	-0.04	0.00	0.00
			Max. Mx	26	-0.03	-0.04	0.00
			Max. Vy	26	0.03	0.00	0.00
T2	160 - 140	Leg	Max Tension	15	7.28	0.03	-0.01
			Max. Compression	18	-9.24	-0.04	0.00
			Max. Mx	18	-9.19	0.04	0.00
			Max. My	12	-0.84	-0.00	-0.05
			Max. Vy	2	0.26	0.02	0.00
			Max. Vx	24	0.25	0.00	-0.01
		Diagonal	Max Tension	8	1.22	0.00	0.00
			Max. Compression	20	-1.22	0.00	0.00
			Max. Mx	36	0.31	0.02	0.00
			Max. My	8	-1.21	0.00	-0.00
			Max. Vy	36	-0.02	0.02	0.00
			Max. Vx	8	0.00	0.00	0.00
T3	140 - 136	Leg	Max Tension	15	9.16	0.03	-0.01
			Max. Compression	18	-11.50	0.37	0.00
			Max. Mx	18	-11.50	0.37	0.00
			Max. My	24	-0.95	0.01	0.22
			Max. Vy	18	-0.12	0.37	0.00
			Max. Vx	24	-0.07	0.01	0.22
		Diagonal	Max Tension	8	1.27	0.00	0.00
			Max. Compression	10	-1.30	0.00	0.00
			Max. Mx	34	0.12	0.02	-0.00
			Max. My	12	1.01	0.01	-0.00
			Max. Vy	34	-0.02	0.02	-0.00
			Max. Vx	12	0.00	0.00	0.00
T4	136 - 132	Leg	Max Tension	15	11.93	-0.35	-0.00
			Max. Compression	18	-16.26	0.11	0.01
			Max. Mx	6	11.38	0.43	-0.00
			Max. My	4	-2.03	-0.01	0.51
			Max. Vy	2	0.80	0.37	0.00
			Max. Vx	4	-0.73	0.01	-0.21
		Diagonal	Max Tension	8	2.38	0.00	0.00
			Max. Compression	10	-2.44	0.00	0.00
			Max. Mx	33	0.55	0.02	-0.00
			Max. My	20	-2.34	0.00	0.00
			Max. Vy	33	-0.02	0.02	-0.00
			Max. Vx	20	-0.00	0.00	0.00
T5	132 - 128	Leg	Max Tension	15	15.87	-0.20	0.01
			Max. Compression	18	-21.27	0.23	0.00
			Max. Mx	2	-20.80	0.23	-0.01
			Max. My	16	-2.12	-0.01	0.26
			Max. Vy	2	-0.05	0.23	-0.01
			Max. Vx	16	0.07	-0.01	0.26
		Diagonal	Max Tension	20	2.79	0.00	0.00
			Max. Compression	8	-2.82	0.00	0.00
			Max. Mx	35	0.52	0.03	-0.00
			Max. My	12	2.48	0.01	-0.00
			Max. Vy	35	-0.03	0.03	-0.00
			Max. Vx	12	0.00	0.00	0.00
T6	128 - 124	Leg	Max Tension	15	20.78	-0.20	0.01
			Max. Compression	18	-27.58	0.18	-0.00

Section No.	Elevation ft	Component Type	Condition	Gov. Load Comb.	Axial K	Major Axis Moment kip-ft	Minor Axis Moment kip-ft
			Max. Mx	2	-26.25	-0.39	-0.01
			Max. My	8	-3.06	-0.02	-0.40
			Max. Vy	2	0.32	0.23	-0.01
			Max. Vx	16	-0.36	-0.02	0.30
		Diagonal	Max Tension	8	3.29	0.00	0.00
			Max. Compression	21	-3.25	0.00	0.00
			Max. Mx	34	0.79	0.02	-0.00
			Max. My	10	-3.14	-0.00	-0.00
			Max. Vy	34	-0.02	0.02	-0.00
			Max. Vx	10	0.00	0.00	0.00
T7	124 - 120	Leg	Max Tension	15	26.33	-0.08	0.01
			Max. Compression	18	-34.14	0.14	0.02
			Max. Mx	14	25.56	-0.22	0.00
			Max. My	16	-3.32	-0.02	0.30
			Max. Vy	6	-0.06	-0.22	-0.00
			Max. Vx	16	0.11	-0.02	0.30
		Diagonal	Max Tension	21	3.81	0.00	0.00
			Max. Compression	8	-3.89	0.00	0.00
			Max. Mx	35	0.64	0.03	-0.00
			Max. My	10	3.03	0.03	-0.00
			Max. Vy	35	-0.03	0.03	-0.00
			Max. Vx	10	0.00	0.00	0.00
T8	120 - 115	Leg	Max Tension	15	32.47	-0.08	0.01
			Max. Compression	18	-40.60	-0.10	0.00
			Max. Mx	35	-18.09	-0.14	-0.01
			Max. My	16	-3.65	-0.05	0.27
			Max. Vy	2	0.08	0.14	-0.01
			Max. Vx	16	-0.10	-0.05	0.27
		Diagonal	Max Tension	9	2.94	0.00	0.00
			Max. Compression	10	-3.18	0.00	0.00
			Max. Mx	14	2.66	0.03	0.00
			Max. My	10	-3.14	-0.01	-0.00
			Max. Vy	35	-0.03	0.02	0.00
			Max. Vx	36	-0.00	0.00	0.00
T9	115 - 110	Leg	Max Tension	15	38.74	0.01	0.00
			Max. Compression	2	-48.32	-0.10	-0.00
			Max. Mx	18	-48.28	0.45	-0.00
			Max. My	16	-3.90	-0.05	0.27
			Max. Vy	6	-0.42	-0.00	-0.01
			Max. Vx	16	0.66	-0.05	0.27
		Diagonal	Max Tension	9	3.59	0.02	-0.00
			Max. Compression	8	-3.66	0.00	0.00
			Max. Mx	35	0.66	0.04	-0.00
			Max. My	10	2.65	0.04	-0.01
			Max. Vy	35	-0.03	0.04	-0.00
			Max. Vx	10	0.00	0.00	0.00
		Secondary Horizontal	Max Tension	16	0.35	0.01	-0.00
			Max. Compression	3	-0.28	0.00	0.00
			Max. Mx	32	0.16	0.02	0.00
			Max. My	14	-0.18	0.01	0.01
			Max. Vy	32	0.03	0.02	0.00
			Max. Vx	14	-0.00	0.00	0.00
T10	110 - 105	Leg	Max Tension	15	45.05	0.05	0.00
			Max. Compression	2	-55.79	0.21	-0.01
			Max. Mx	2	-55.79	0.21	-0.01
			Max. My	16	-4.86	-0.03	0.22
			Max. Vy	2	-0.10	0.21	-0.01
			Max. Vx	4	-0.07	-0.03	-0.21
		Diagonal	Max Tension	8	3.49	0.00	0.00
			Max. Compression	8	-3.53	0.00	0.00
			Max. Mx	35	0.56	0.03	0.00
			Max. My	37	0.60	0.03	0.00
			Max. Vy	33	0.03	0.03	-0.00
			Max. Vx	37	-0.00	0.00	0.00
T11	105 - 100	Leg	Max Tension	15	51.24	-0.18	0.01
			Max. Compression	2	-62.78	0.07	-0.01
			Max. Mx	2	-62.69	0.21	-0.01
			Max. My	16	-5.27	-0.01	0.17

Section No.	Elevation ft	Component Type	Condition	Gov. Load Comb.	Axial K	Major Axis Moment kip-ft	Minor Axis Moment kip-ft
			Max. Vy	2	0.06	0.21	-0.01
			Max. Vx	4	0.06	-0.01	-0.17
		Diagonal	Max Tension	8	3.51	0.00	0.00
			Max. Compression	8	-3.49	0.00	0.00
			Max. Mx	35	0.74	0.03	-0.00
			Max. My	31	-0.64	0.03	-0.00
			Max. Vy	33	0.03	0.03	0.00
			Max. Vx	31	0.00	0.00	0.00
T12	100 - 93.3333	Leg	Max Tension	15	58.04	-0.08	0.01
			Max. Compression	2	-70.35	0.21	-0.01
			Max. Mx	3	-69.08	0.21	-0.01
			Max. My	16	-5.56	-0.00	0.26
			Max. Vy	3	-0.07	0.21	-0.01
			Max. Vx	16	-0.08	-0.00	0.26
		Diagonal	Max Tension	24	3.73	0.00	0.00
			Max. Compression	24	-3.77	0.00	0.00
			Max. Mx	33	0.62	0.03	-0.00
			Max. My	37	-0.81	0.03	0.01
			Max. Vy	33	0.03	0.03	-0.00
			Max. Vx	31	0.00	0.00	0.00
T13	93.3333 - 86.6667	Leg	Max Tension	15	65.54	-0.20	0.01
			Max. Compression	2	-78.87	0.13	-0.01
			Max. Mx	3	-77.41	0.21	-0.01
			Max. My	16	-5.78	-0.00	0.26
			Max. Vy	22	-0.06	-0.20	0.02
			Max. Vx	16	0.07	-0.00	0.26
		Diagonal	Max Tension	24	3.80	0.00	0.00
			Max. Compression	24	-3.80	0.00	0.00
			Max. Mx	33	0.63	0.04	0.01
			Max. My	31	-0.82	0.04	-0.01
			Max. Vy	33	0.04	0.04	0.01
			Max. Vx	31	0.00	0.00	0.00
T14	86.6667 - 80	Leg	Max Tension	15	72.59	-0.13	0.01
			Max. Compression	2	-86.87	0.21	-0.01
			Max. Mx	3	-85.43	0.21	-0.01
			Max. My	16	-6.30	-0.01	0.29
			Max. Vy	22	0.06	-0.20	0.01
			Max. Vx	16	-0.08	-0.01	0.29
		Diagonal	Max Tension	24	3.80	0.00	0.00
			Max. Compression	24	-3.84	0.00	0.00
			Max. Mx	33	0.62	0.05	0.01
			Max. My	37	0.58	0.05	0.01
			Max. Vy	33	0.04	0.05	0.01
			Max. Vx	37	-0.00	0.00	0.00
T15	80 - 73.3333	Leg	Max Tension	15	79.42	-0.20	0.01
			Max. Compression	2	-94.78	0.22	-0.01
			Max. Mx	3	-93.24	0.22	-0.01
			Max. My	16	-6.53	-0.01	0.29
			Max. Vy	22	0.06	-0.20	0.01
			Max. Vx	16	0.08	-0.01	0.29
		Diagonal	Max Tension	24	3.89	0.00	0.00
			Max. Compression	24	-3.92	0.00	0.00
			Max. Mx	33	0.57	0.06	0.01
			Max. My	31	0.46	0.06	-0.01
			Max. Vy	33	0.05	0.06	0.01
			Max. Vx	31	0.00	0.00	0.00
T16	73.3333 - 66.6667	Leg	Max Tension	15	85.95	-0.21	0.01
			Max. Compression	2	-102.46	0.19	-0.01
			Max. Mx	3	-100.67	0.22	-0.01
			Max. My	16	-7.19	-0.01	0.38
			Max. Vy	3	0.06	0.22	-0.01
			Max. Vx	16	-0.09	-0.01	0.38
		Diagonal	Max Tension	24	3.97	0.00	0.00
			Max. Compression	24	-3.99	0.00	0.00
			Max. Mx	33	0.65	0.07	0.01
			Max. My	31	-0.84	0.06	-0.01

Section No.	Elevation ft	Component Type	Condition	Gov. Load Comb.	Axial K	Major Axis Moment kip-ft	Minor Axis Moment kip-ft
			Max. Vy	33	0.05	0.07	0.01
			Max. Vx	31	0.00	0.00	0.00
T17	66.6667 - 60	Leg	Max Tension	15	92.34	-0.20	0.01
			Max. Compression	2	-110.00	0.20	-0.00
			Max. Mx	14	90.62	-0.21	0.01
			Max. My	16	-7.43	-0.01	0.38
			Max. Vy	22	-0.06	-0.20	0.01
			Max. Vx	16	0.10	-0.01	0.38
		Diagonal	Max Tension	24	4.12	0.00	0.00
			Max. Compression	24	-4.15	0.00	0.00
			Max. Mx	33	0.52	0.08	0.01
			Max. My	31	0.40	0.08	-0.01
			Max. Vy	33	0.05	0.08	0.01
			Max. Vx	31	0.00	0.00	0.00
T18	60 - 53.3333	Leg	Max Tension	15	98.60	-0.18	0.00
			Max. Compression	2	-117.46	0.21	-0.01
			Max. Mx	37	1.57	-0.35	0.00
			Max. My	16	-8.12	-0.02	0.39
			Max. Vy	37	0.09	-0.35	0.00
			Max. Vx	16	-0.10	-0.02	0.39
		Diagonal	Max Tension	24	4.11	0.00	0.00
			Max. Compression	24	-4.10	0.00	0.00
			Max. Mx	33	0.74	0.07	0.01
			Max. My	31	-0.76	0.07	-0.01
			Max. Vy	33	0.05	0.07	0.01
			Max. Vx	31	0.00	0.00	0.00
T19	53.3333 - 46.6667	Leg	Max Tension	15	104.58	-0.23	0.01
			Max. Compression	2	-124.54	0.37	-0.02
			Max. Mx	27	-43.37	0.52	-0.00
			Max. My	16	-8.31	-0.02	0.39
			Max. Vy	37	-0.13	-0.35	0.00
			Max. Vx	16	0.08	-0.02	0.39
		Diagonal	Max Tension	24	4.22	0.00	0.00
			Max. Compression	24	-4.28	0.00	0.00
			Max. Mx	33	0.36	0.09	0.01
			Max. My	31	0.24	0.08	-0.01
			Max. Vy	33	0.05	0.09	0.01
			Max. Vx	31	0.00	0.00	0.00
T20	46.6667 - 40	Leg	Max Tension	15	110.57	-0.32	0.02
			Max. Compression	2	-131.79	0.30	-0.01
			Max. Mx	37	1.91	-0.67	0.00
			Max. My	16	-9.04	-0.02	0.33
			Max. Vy	37	0.17	-0.67	0.00
			Max. Vx	16	-0.07	-0.02	0.33
		Diagonal	Max Tension	24	4.38	0.00	0.00
			Max. Compression	24	-4.39	0.00	0.00
			Max. Mx	33	0.98	0.09	0.01
			Max. My	31	-0.56	0.08	-0.01
			Max. Vy	33	0.06	0.09	0.01
			Max. Vx	31	0.00	0.00	0.00
T21	40 - 30	Leg	Max Tension	15	117.90	-0.30	0.01
			Max. Compression	2	-140.71	0.43	-0.03
			Max. Mx	27	-48.30	0.87	-0.01
			Max. My	16	-9.74	-0.04	1.01
			Max. Vy	37	-0.16	-0.67	0.00
			Max. Vx	16	-0.17	-0.04	1.01
		Diagonal	Max Tension	24	5.11	0.00	0.00
			Max. Compression	24	-5.09	0.00	0.00
			Max. Mx	33	0.20	0.14	0.02
			Max. My	31	-1.62	0.13	-0.02
			Max. Vy	33	0.07	0.14	0.02
			Max. Vx	31	0.00	0.00	0.00
T22	30 - 20	Leg	Max Tension	15	126.73	-0.47	0.03
			Max. Compression	2	-151.32	0.57	-0.02
			Max. Mx	33	6.19	-1.25	0.00
			Max. My	16	-10.02	-0.04	1.01
			Max. Vy	37	0.22	-1.25	0.00
			Max. Vx	16	0.19	-0.04	1.01

Section No.	Elevation ft	Component Type	Condition	Gov. Load Comb.	Axial K	Major Axis Moment kip-ft	Minor Axis Moment kip-ft
		Diagonal	Max Tension	24	5.28	0.00	0.00
			Max. Compression	24	-5.41	0.00	0.00
			Max. Mx	33	1.55	0.13	-0.02
			Max. My	34	1.52	0.13	0.02
			Max. Vy	33	0.07	0.13	-0.02
			Max. Vx	34	-0.00	0.00	0.00
T23	20 - 10	Leg	Max Tension	15	135.55	-0.49	0.02
			Max. Compression	2	-162.42	0.37	-0.02
			Max. Mx	27	-54.99	1.32	-0.00
			Max. My	16	-11.38	-0.07	1.10
			Max. Vy	37	-0.27	-1.25	0.00
			Max. Vx	16	-0.19	-0.07	1.10
		Diagonal	Max Tension	24	5.41	0.00	0.00
			Max. Compression	24	-5.37	0.00	0.00
			Max. Mx	33	-0.32	0.23	0.02
			Max. My	31	-2.10	0.21	-0.02
			Max. Vy	33	0.09	0.23	0.02
			Max. Vx	31	0.00	0.00	0.00
T24	10 - 0	Leg	Max Tension	15	143.56	-0.45	0.02
			Max. Compression	2	-172.48	0.00	0.00
			Max. Mx	27	-60.10	1.32	-0.00
			Max. My	16	-11.74	-0.07	1.10
			Max. Vy	37	0.14	0.00	-0.00
			Max. Vx	16	0.20	-0.07	1.10
		Diagonal	Max Tension	24	5.59	0.00	0.00
			Max. Compression	2	-5.87	0.00	0.00
			Max. Mx	32	-0.07	-0.13	0.02
			Max. My	34	2.28	0.12	0.03
			Max. Vy	32	0.08	0.13	-0.02
			Max. Vx	34	-0.00	0.00	0.00

Maximum Reactions

Location	Condition	Gov. Load Comb.	Vertical K	Horizontal, X K	Horizontal, Z K
Leg C	Max. Vert	18	171.10	15.56	-8.67
	Max. H_x	18	171.10	15.56	-8.67
	Max. H_z	5	-127.69	-11.75	7.41
	Min. Vert	7	-140.07	-13.15	7.29
	Min. H_x	7	-140.07	-13.15	7.29
	Min. H_z	18	171.10	15.56	-8.67
Leg B	Max. Vert	10	171.57	-15.61	-8.74
	Max. H_x	23	-140.53	13.20	7.36
	Max. H_z	25	-128.60	11.65	7.85
	Min. Vert	23	-140.53	13.20	7.36
	Min. H_x	10	171.57	-15.61	-8.74
	Min. H_z	10	171.57	-15.61	-8.74
Leg A	Max. Vert	2	177.71	0.23	18.72
	Max. H_x	20	11.79	1.60	0.94
	Max. H_z	2	177.71	0.23	18.72
	Min. Vert	15	-147.63	-0.23	-15.96
	Min. H_x	9	8.83	-1.60	0.70
	Min. H_z	15	-147.63	-0.23	-15.96

Tower Mast Reaction Summary

Load Combination	Vertical K	$Shear_x$ K	$Shear_z$ K	Overturning Moment, M_x kip-ft	Overturning Moment, M_z kip-ft	Torque kip-ft
Dead Only	30.38	0.00	0.00	5.22	-0.23	0.00

Load Combination	Vertical	$Shear_x$	$Shear_z$	Overturning Moment, M_x	Overturning Moment, M_z	Torque
	K	K	K	kip-ft	kip-ft	kip-ft
1.2 Dead+1.0 Wind 0 deg - No Ice	36.46	0.00	-29.82	-2691.34	-0.51	7.36
0.9 Dead+1.0 Wind 0 deg - No Ice	27.35	0.00	-29.82	-2692.90	-0.45	7.36
1.2 Dead+1.0 Wind 30 deg - No Ice	36.46	14.09	-24.45	-2222.35	-1283.96	14.37
0.9 Dead+1.0 Wind 30 deg - No Ice	27.35	14.09	-24.45	-2223.92	-1283.90	14.37
1.2 Dead+1.0 Wind 60 deg - No Ice	36.46	22.78	-13.17	-1209.34	-2101.26	8.61
0.9 Dead+1.0 Wind 60 deg - No Ice	27.35	22.78	-13.17	-1210.90	-2101.19	8.61
1.2 Dead+1.0 Wind 90 deg - No Ice	36.46	25.53	0.00	6.21	-2371.60	4.18
0.9 Dead+1.0 Wind 90 deg - No Ice	27.35	25.53	0.00	4.64	-2371.54	4.18
1.2 Dead+1.0 Wind 120deg - No Ice	36.46	24.56	14.20	1302.03	-2240.61	7.43
0.9 Dead+1.0 Wind 120deg - No Ice	27.35	24.56	14.20	1300.46	-2240.55	7.43
1.2 Dead+1.0 Wind 150deg - No Ice	36.46	14.24	24.69	2248.93	-1292.78	0.80
0.9 Dead+1.0 Wind 150deg - No Ice	27.35	14.24	24.69	2247.37	-1292.71	0.80
1.2 Dead+1.0 Wind 180deg - No Ice	36.46	-0.00	27.89	2549.58	0.17	-7.34
0.9 Dead+1.0 Wind 180deg - No Ice	27.35	-0.00	27.89	2548.01	0.24	-7.34
1.2 Dead+1.0 Wind 210deg - No Ice	36.46	-14.09	24.44	2234.29	1283.67	-14.36
0.9 Dead+1.0 Wind 210deg - No Ice	27.35	-14.09	24.44	2232.72	1283.73	-14.36
1.2 Dead+1.0 Wind 240deg - No Ice	36.46	-24.45	14.14	1298.84	2233.65	-8.61
0.9 Dead+1.0 Wind 240deg - No Ice	27.35	-24.45	14.14	1297.28	2233.72	-8.61
1.2 Dead+1.0 Wind 270deg - No Ice	36.46	-25.53	-0.00	5.92	2371.04	-4.16
0.9 Dead+1.0 Wind 270deg - No Ice	27.35	-25.53	-0.00	4.35	2371.11	-4.16
1.2 Dead+1.0 Wind 300deg - No Ice	36.46	-22.90	-13.24	-1213.28	2107.47	-7.41
0.9 Dead+1.0 Wind 300deg - No Ice	27.35	-22.90	-13.24	-1214.85	2107.54	-7.41
1.2 Dead+1.0 Wind 330deg - No Ice	36.46	-14.24	-24.69	-2237.11	1292.49	-0.78
0.9 Dead+1.0 Wind 330deg - No Ice	27.35	-14.24	-24.69	-2238.68	1292.56	-0.78
1.2 Dead+1.0 Ice+1.0 Temp	82.62	0.00	0.00	26.14	-4.73	0.00
1.2 Dead+1.0 Wind 0 deg+1.0 Ice+1.0 Temp	82.62	-0.00	-6.17	-542.86	-4.72	1.44
1.2 Dead+1.0 Wind 30 deg+1.0 Ice+1.0 Temp	82.62	2.91	-5.05	-445.55	-276.57	2.25
1.2 Dead+1.0 Wind 60 deg+1.0 Ice+1.0 Temp	82.62	4.74	-2.74	-232.84	-452.67	1.37
1.2 Dead+1.0 Wind 90 deg+1.0 Ice+1.0 Temp	82.62	5.39	0.00	26.18	-516.03	1.23
1.2 Dead+1.0 Wind 120 deg+1.0 Ice+1.0 Temp	82.62	4.95	2.86	294.32	-468.61	1.84
1.2 Dead+1.0 Wind 150 deg+1.0 Ice+1.0 Temp	82.62	2.94	5.10	500.62	-278.36	0.86
1.2 Dead+1.0 Wind 180 deg+1.0 Ice+1.0 Temp	82.62	-0.00	5.97	580.01	-4.69	-1.44
1.2 Dead+1.0 Wind 210 deg+1.0 Ice+1.0 Temp	82.62	-2.91	5.05	497.73	267.16	-2.24
1.2 Dead+1.0 Wind 240 deg+1.0 Ice+1.0 Temp	82.62	-4.91	2.84	292.66	456.21	-1.37
1.2 Dead+1.0 Wind 270 deg+1.0 Ice+1.0 Temp	82.62	-5.39	-0.00	26.04	506.57	-1.23

Load Combination	Vertical K	$Shear_x$ K	$Shear_z$ K	Overturning Moment, M_x kip-ft	Overturning Moment, M_z kip-ft	Torque kip-ft
1.2 Dead+1.0 Wind 300 deg+1.0 Ice+1.0 Temp	82.62	-4.79	-2.77	-234.63	446.23	-1.84
1.2 Dead+1.0 Wind 330 deg+1.0 Ice+1.0 Temp	82.62	-2.94	-5.10	-448.46	268.95	-0.86
Dead+Wind 0 deg - Service	30.38	0.00	-8.53	-760.79	-0.29	2.07
Dead+Wind 30 deg - Service	30.38	4.04	-7.00	-627.86	-364.89	4.05
Dead+Wind 60 deg - Service	30.38	6.53	-3.78	-340.27	-597.37	2.42
Dead+Wind 90 deg - Service	30.38	7.33	0.00	5.21	-674.35	1.18
Dead+Wind 120 deg - Service	30.38	7.03	4.07	373.29	-636.62	2.09
Dead+Wind 150 deg - Service	30.38	4.08	7.07	642.27	-367.38	0.22
Dead+Wind 180 deg - Service	30.38	-0.00	7.99	727.78	-0.10	-2.07
Dead+Wind 210 deg - Service	30.38	-4.04	7.00	638.14	364.51	-4.04
Dead+Wind 240 deg - Service	30.38	-7.00	4.05	372.39	634.36	-2.43
Dead+Wind 270 deg - Service	30.38	-7.33	-0.00	5.13	673.90	-1.17
Dead+Wind 300 deg - Service	30.38	-6.57	-3.80	-341.38	598.82	-2.09
Dead+Wind 330 deg - Service	30.38	-4.08	-7.07	-632.02	367.00	-0.22

Solution Summary

	Sum of Applied Forces			Sum of Reactions			
Load Comb.	PX K	PY K	PZ K	PX K	PY K	PZ K	% Error
1	0.00	-30.38	0.00	0.00	30.38	0.00	0.000%
2	0.00	-36.46	-29.82	-0.00	36.46	29.82	0.000%
3	0.00	-27.35	-29.82	-0.00	27.35	29.82	0.000%
4	14.09	-36.46	-24.45	-14.09	36.46	24.45	0.000%
5	14.09	-27.35	-24.45	-14.09	27.35	24.45	0.000%
6	22.78	-36.46	-13.17	-22.78	36.46	13.17	0.000%
7	22.78	-27.35	-13.17	-22.78	27.35	13.17	0.000%
8	25.53	-36.46	0.00	-25.53	36.46	-0.00	0.000%
9	25.53	-27.35	0.00	-25.53	27.35	-0.00	0.000%
10	24.56	-36.46	14.20	-24.56	36.46	-14.20	0.000%
11	24.56	-27.35	14.20	-24.56	27.35	-14.20	0.000%
12	14.24	-36.46	24.69	-14.24	36.46	-24.69	0.000%
13	14.24	-27.35	24.69	-14.24	27.35	-24.69	0.000%
14	-0.00	-36.46	27.89	0.00	36.46	-27.89	0.000%
15	-0.00	-27.35	27.89	0.00	27.35	-27.89	0.000%
16	-14.09	-36.46	24.44	14.09	36.46	-24.44	0.000%
17	-14.09	-27.35	24.44	14.09	27.35	-24.44	0.000%
18	-24.45	-36.46	14.14	24.45	36.46	-14.14	0.000%
19	-24.45	-27.35	14.14	24.45	27.35	-14.14	0.000%
20	-25.53	-36.46	-0.00	25.53	36.46	0.00	0.000%
21	-25.53	-27.35	-0.00	25.53	27.35	0.00	0.000%
22	-22.90	-36.46	-13.24	22.90	36.46	13.24	0.000%
23	-22.90	-27.35	-13.24	22.90	27.35	13.24	0.000%
24	-14.24	-36.46	-24.69	14.24	36.46	24.69	0.000%
25	-14.24	-27.35	-24.69	14.24	27.35	24.69	0.000%
26	0.00	-82.62	0.00	0.00	82.62	-0.00	0.000%
27	-0.00	-82.62	-6.17	0.00	82.62	6.17	0.000%
28	2.91	-82.62	-5.05	-2.91	82.62	5.05	0.000%
29	4.74	-82.62	-2.74	-4.74	82.62	2.74	0.000%
30	5.39	-82.62	0.00	-5.39	82.62	-0.00	0.000%
31	4.95	-82.62	2.86	-4.95	82.62	-2.86	0.000%
32	2.94	-82.62	5.10	-2.94	82.62	-5.10	0.000%
33	-0.00	-82.62	5.97	0.00	82.62	-5.97	0.000%
34	-2.91	-82.62	5.05	2.91	82.62	-5.05	0.000%
35	-4.91	-82.62	2.84	4.91	82.62	-2.84	0.000%
36	-5.39	-82.62	-0.00	5.39	82.62	0.00	0.000%

Load Comb.	Sum of Applied Forces PX K	PY K	PZ K	Sum of Reactions PX K	PY K	PZ K	% Error
37	-4.79	-82.62	-2.77	4.79	82.62	2.77	0.000%
38	-2.94	-82.62	-5.10	2.94	82.62	5.10	0.000%
39	0.00	-30.38	-8.53	-0.00	30.38	8.53	0.000%
40	4.04	-30.38	-7.00	-4.04	30.38	7.00	0.000%
41	6.53	-30.38	-3.78	-6.53	30.38	3.78	0.000%
42	7.33	-30.38	0.00	-7.33	30.38	-0.00	0.000%
43	7.03	-30.38	4.07	-7.03	30.38	-4.07	0.000%
44	4.08	-30.38	7.07	-4.08	30.38	-7.07	0.000%
45	-0.00	-30.38	7.99	0.00	30.38	-7.99	0.000%
46	-4.04	-30.38	7.00	4.04	30.38	-7.00	0.000%
47	-7.00	-30.38	4.05	7.00	30.38	-4.05	0.000%
48	-7.33	-30.38	-0.00	7.33	30.38	0.00	0.000%
49	-6.57	-30.38	-3.80	6.57	30.38	3.80	0.000%
50	-4.08	-30.38	-7.07	4.08	30.38	7.07	0.000%

Maximum Tower Deflections - Service Wind

Section No.	Elevation ft	Horz. Deflection in	Gov. Load Comb.	Tilt °	Twist °
T1	172 - 160	3.51	39	0.183	0.016
T2	160 - 140	3.06	39	0.182	0.015
T3	140 - 136	2.31	39	0.168	0.013
T4	136 - 132	2.17	39	0.165	0.013
T5	132 - 128	2.03	39	0.161	0.013
T6	128 - 124	1.90	39	0.156	0.013
T7	124 - 120	1.76	39	0.150	0.013
T8	120 - 115	1.64	39	0.143	0.013
T9	115 - 110	1.49	39	0.131	0.012
T10	110 - 105	1.35	39	0.119	0.012
T11	105 - 100	1.23	39	0.112	0.011
T12	100 - 93.3333	1.11	39	0.105	0.011
T13	93.3333 - 86.6667	0.96	39	0.097	0.010
T14	86.6667 - 80	0.82	39	0.088	0.009
T15	80 - 73.3333	0.70	39	0.078	0.008
T16	73.3333 - 66.6667	0.59	39	0.071	0.008
T17	66.6667 - 60	0.49	39	0.064	0.007
T18	60 - 53.3333	0.40	39	0.056	0.006
T19	53.3333 - 46.6667	0.32	39	0.049	0.005
T20	46.6667 - 40	0.24	39	0.042	0.004
T21	40 - 30	0.18	39	0.035	0.003
T22	30 - 20	0.10	39	0.026	0.002
T23	20 - 10	0.05	39	0.016	0.001
T24	10 - 0	0.02	39	0.008	0.001

Critical Deflections and Radius of Curvature - Service Wind

Elevation ft	Appurtenance	Gov. Load Comb.	Deflection in	Tilt °	Twist °	Radius of Curvature ft
172'	4' x 2" Pipe Mount	39	3.51	0.183	0.016	621215
160'	(2) 7200.01 w/ Mount Pipe	39	3.06	0.182	0.015	410215
135'	(3) SBNHH-1D65C w/ Mount Pipe	39	2.14	0.164	0.013	134288
126'	MX08FRO665-21 w/ Mount Pipe	39	1.83	0.154	0.013	43650
120'	VHLP1-220	39	1.64	0.143	0.013	25018
115'	ET-X-TS-70-15-62-18-IR-RD w/ Mount Pipe	39	1.49	0.131	0.012	22355

tnxTower Report - version 8.1.1.0

Maximum Tower Deflections - Design Wind

Section No.	Elevation ft	Horz. Deflection in	Gov. Load Comb.	Tilt °	Twist °
T1	172 - 160	12.55	3	0.647	0.055
T2	160 - 140	10.92	3	0.646	0.054
T3	140 - 136	8.24	3	0.600	0.048
T4	136 - 132	7.74	3	0.590	0.046
T5	132 - 128	7.24	3	0.578	0.046
T6	128 - 124	6.75	3	0.561	0.046
T7	124 - 120	6.28	3	0.538	0.046
T8	120 - 115	5.82	3	0.510	0.046
T9	115 - 110	5.29	3	0.470	0.044
T10	110 - 105	4.81	3	0.425	0.043
T11	105 - 100	4.36	3	0.401	0.041
T12	100 - 93.3333	3.93	3	0.375	0.039
T13	93.3333 - 86.6667	3.40	3	0.345	0.035
T14	86.6667 - 80	2.91	3	0.313	0.032
T15	80 - 73.3333	2.48	3	0.279	0.030
T16	73.3333 - 66.6667	2.08	3	0.253	0.027
T17	66.6667 - 60	1.73	3	0.226	0.025
T18	60 - 53.3333	1.41	3	0.199	0.022
T19	53.3333 - 46.6667	1.12	3	0.174	0.019
T20	46.6667 - 40	0.86	3	0.149	0.015
T21	40 - 30	0.64	3	0.124	0.012
T22	30 - 20	0.36	3	0.091	0.008
T23	20 - 10	0.18	3	0.057	0.005
T24	10 - 0	0.06	2	0.028	0.003

Critical Deflections and Radius of Curvature - Design Wind

Elevation ft	Appurtenance	Gov. Load Comb.	Deflection in	Tilt °	Twist °	Radius of Curvature ft
172'	4' x 2" Pipe Mount	3	12.55	0.647	0.055	183513
160'	(2) 7200.01 w/ Mount Pipe	3	10.92	0.646	0.054	125629
135'	(3) SBNHH-1D65C w/ Mount Pipe	3	7.61	0.588	0.046	40564
126'	MX08FRO665-21 w/ Mount Pipe	3	6.51	0.550	0.046	12636
120'	VHLP1-220	3	5.82	0.510	0.046	7148
115'	ET-X-TS-70-15-62-18-IR-RD w/ Mount Pipe	3	5.29	0.470	0.044	6381

Bolt Design Data

Section No.	Elevation ft	Component Type	Bolt Grade	Bolt Size in	Number Of Bolts	Maximum Load per Bolt K	Allowable Load per Bolt K	Ratio Load / Allowable	Allowable Ratio	Criteria
T1	172	Leg	A325N	0.625	4	0.12	20.34	0.006	1.05	Bolt Tension
		Diagonal	A325X	0.500	1	0.29	3.13	0.093	1.05	Member Block Shear
		Top Girt	A325X	0.500	1	0.03	3.13	0.009	1.05	Member Block Shear
T2	160	Leg	A325N	0.625	4	1.82	20.34	0.089	1.05	Bolt Tension

Section No.	Elevation ft	Component Type	Bolt Grade	Bolt Size in	Number Of Bolts	Maximum Load per Bolt K	Allowable Load per Bolt K	Ratio Load / Allowable	Allowable Ratio	Criteria
		Diagonal	A325X	0.500	1	1.22	5.20	0.234	1.05	Member Block Shear
T3	140	Diagonal	A325X	0.500	1	1.27	6.20	0.204	1.05	Member Bearing
T4	136	Diagonal	A325X	0.500	1	2.38	7.18	0.331	1.05	Gusset Bearing
T5	132	Diagonal	A325N	0.500	1	2.79	7.18	0.389	1.05	Gusset Bearing
T6	128	Diagonal	A325N	0.500	1	3.29	7.18	0.459	1.05	Gusset Bearing
T7	124	Leg	A325N	0.750	4	6.58	30.10	0.219	1.05	Bolt Tension
		Diagonal	A325N	0.500	1	3.81	7.18	0.531	1.05	Gusset Bearing
T8	120	Diagonal	A325N	0.500	1	2.94	7.18	0.410	1.05	Gusset Bearing
T9	115	Diagonal	A325N	0.500	1	3.59	7.18	0.500	1.05	Gusset Bearing
		Secondary Horizontal	A325N	0.625	1	0.84	6.86	0.122	1.05	Gusset Bearing
T10	110	Diagonal	A325N	0.500	1	3.49	7.18	0.486	1.05	Gusset Bearing
T11	105	Leg	A325N	0.875	4	12.81	41.56	0.308	1.05	Bolt Tension
		Diagonal	A325N	0.500	1	3.51	7.18	0.489	1.05	Gusset Bearing
T12	100	Diagonal	A325N	0.500	1	3.73	6.20	0.601	1.05	Member Bearing
T13	93.3333	Diagonal	A325N	0.500	1	3.80	7.18	0.529	1.05	Gusset Bearing
T14	86.6667	Leg	A325N	0.875	4	18.15	41.56	0.437	1.05	Bolt Tension
		Diagonal	A325N	0.500	1	3.80	7.18	0.530	1.05	Gusset Bearing
T15	80	Diagonal	A325N	0.500	1	3.89	7.18	0.542	1.05	Gusset Bearing
T16	73.3333	Diagonal	A325N	0.500	1	3.97	7.18	0.554	1.05	Gusset Bearing
T17	66.6667	Leg	A325N	1.000	4	23.09	54.52	0.423	1.05	Bolt Tension
		Diagonal	A325N	0.500	1	4.12	7.18	0.574	1.05	Gusset Bearing
T18	60	Diagonal	A325X	0.500	1	4.11	6.20	0.663	1.05	Member Bearing
T19	53.3333	Diagonal	A325X	0.500	1	4.22	6.20	0.681	1.05	Member Bearing
T20	46.6667	Leg	A325N	1.000	4	27.64	54.52	0.507	1.05	Bolt Tension
		Diagonal	A325N	0.500	1	4.38	7.18	0.611	1.05	Gusset Bearing
T21	40	Diagonal	A325X	0.625	1	5.11	7.83	0.652	1.05	Member Bearing
T22	30	Leg	A325N	1.000	4	31.68	54.52	0.581	1.05	Bolt Tension
		Diagonal	A325N	0.625	1	5.28	10.44	0.505	1.05	Member Bearing
T23	20	Diagonal	A325N	0.625	1	5.41	13.81	0.392	1.05	Bolt Shear
T24	10	Diagonal	A325N	0.625	1	5.87	13.81	0.425	1.05	Bolt Shear

Compression Checks

Leg Design Data (Compression)

Section No.	Elevation ft	Size	L ft	L_u ft	Kl/r	A in^2	P_u K	ϕP_n K	Ratio P_u / ϕP_n
T1	172 - 160	ROHN 2 STD	12'	4'	61.0 K=1.00	1.075	-0.82	36.84	0.022 [1]
T2	160 - 140	ROHN 2 STD	20'	4'	61.0 K=1.00	1.075	-9.24	36.84	0.251 [1]
T3	140 - 136	ROHN 2.5 EH	4'	4'	51.9 K=1.00	2.254	-11.50	83.25	0.138 [1]
T4	136 - 132	ROHN 2.5 EH	4'	4'	51.9 K=1.00	2.254	-16.26	83.25	0.195 [1]
T5	132 - 128	ROHN 2.5 EH	4'	4'	51.9 K=1.00	2.254	-21.27	83.25	0.255 [1]
T6	128 - 124	ROHN 2.5 EH	4'	4'	51.9 K=1.00	2.254	-27.58	83.25	0.331 [1]
T7	124 - 120	ROHN 2.5 EH	4'	4'	51.9 K=1.00	2.254	-34.14	83.25	0.410 [1]

Section No.	Elevation ft	Size	L ft	L_u ft	Kl/r	A in^2	P_u K	ϕP_n K	Ratio $\frac{P_u}{\phi P_n}$
T8	120 - 115	ROHN 3 STD	5'1/8"	5'1/8"	51.7 K=1.00	2.228	-40.60	82.51	0.492 [1]
T9	115 - 110	ROHN 3 STD	5'1/8"	2'7-3/32"	26.7 K=1.00	2.228	-48.32	95.19	0.508 [1]
T10	110 - 105	P 3.5in x 0.216in w/ 1/2HSS 4.5in x 0.337in	5'1/8"	5'1/8"	61.0 K=1.12	4.432	-55.79	151.97	0.367 [1]
T11	105 - 100	P 3.5in x 0.216in w/ 1/2HSS 4.5in x 0.337in	5'1/8"	5'1/8"	61.0 K=1.12	4.432	-62.78	151.97	0.413 [1]
T12	100 - 93.3333	P 3.5in x 0.3in w/ 1/2HSS 4.5in x 0.337in	6'8-5/32"	6'8-5/32"	76.8 K=1.07	5.220	-70.35	152.58	0.461 [1]
T13	93.3333 - 86.6667	P 3.5in x 0.3in w/ 1/2HSS 4.5in x 0.337in	6'8-5/32"	6'8-5/32"	76.8 K=1.07	5.220	-78.87	152.58	0.517 [1]
T14	86.6667 - 80	P 3.5in x 0.3in w/ 1/2HSS 4.5in x 0.337in	6'8-5/32"	6'8-5/32"	76.8 K=1.07	5.220	-86.87	152.58	0.569 [1]
T15	80 - 73.3333	P 4in x 0.318in w/ 1/2HSS 5.563in x 0.375in	6'8-5/32"	6'8-5/32"	67.0 K=1.06	6.734	-94.78	218.29	0.434 [1]
T16	73.3333 - 66.6667	P 4in x 0.318in w/ 1/2HSS 5.563in x 0.375in	6'8-5/32"	6'8-5/32"	67.0 K=1.06	6.734	-102.46	218.29	0.469 [1]
T17	66.6667 - 60	P 4in x 0.318in w/ 1/2HSS 5.563in x 0.375in	6'8-5/32"	6'8-5/32"	67.0 K=1.06	6.734	-110.00	218.29	0.504 [1]
T18	60 - 53.3333	P 4.5in x 0.337in w/ 1/2HSS 5.563in x 0.375in	6'8-5/32"	6'8-5/32"	59.8 K=1.08	7.463	-117.46	258.68	0.454 [1]
T19	53.3333 - 46.6667	P 4.5in x 0.337in w/ 1/2HSS 5.563in x 0.375in	6'8-5/32"	6'8-5/32"	59.8 K=1.08	7.463	-124.54	258.68	0.481 [1]
T20	46.6667 - 40	P 4.5in x 0.337in w/ 1/2HSS 5.563in x 0.375in	6'8-5/32"	6'8-5/32"	59.8 K=1.08	7.463	-131.79	258.68	0.509 [1]
T21	40 - 30	P 5.563in x 0.258in w/ 1/2HSS 6.625in x 0.432in	10'1/4"	10'1/4"	70.6 K=1.04	8.502	-140.71	265.74	0.530 [1]
T22	30 - 20	P 5.563in x 0.258in w/ 1/2HSS 6.625in x 0.432in	10'1/4"	10'1/4"	70.6 K=1.04	8.502	-151.32	265.74	0.569 [1]
T23	20 - 10	P 5.563in x 0.375in w/ 1/2HSS 6.625in x 0.432in	10'1/4"	10'1/4"	69.5 K=1.04	10.314	-162.42	326.00	0.498 [1]
T24	10 - 0	P 5.563in x 0.375in w/ 1/2HSS 6.625in x 0.432in	10'1/4"	10'1/4"	69.5 K=1.04	10.314	-172.48	326.00	0.529 [1]

[1] P_u / ϕP_n controls

Diagonal Design Data (Compression)

Section No.	Elevation ft	Size	L ft	L_u ft	Kl/r	A in^2	P_u K	ϕP_n K	Ratio $\frac{P_u}{\phi P_n}$
T1	172 - 160	L1 1/2x1 1/2x1/8	7'7-13/16"	3'7-3/16"	146.0 K=1.00	0.359	-0.33	4.82	0.068 [1]
T2	160 - 140	L1 1/2x1 1/2x3/16	7'8-5/32"	3'7-7/16"	148.2 K=1.00	0.527	-1.22	6.87	0.177 [1]
T3	140 - 136	L1 3/4x1 3/4x3/16	7'8-9/32"	3'7-3/16"	125.9 K=1.00	0.621	-1.30	11.22	0.116 [1]
T4	136 - 132	L2x2x1/4	7'8-13/32"	3'7-5/16"	113.0 K=1.02	0.938	-2.44	20.21	0.120 [1]
T5	132 - 128	L2x2x1/4	7'8-13/32"	3'7-5/16"	113.1 K=1.02	0.938	-2.82	20.18	0.140 [1]
T6	128 - 124	L2x2x1/4	7'8-17/32"	3'7-5/16"	113.2 K=1.02	0.938	-3.25	20.17	0.161 [1]
T7	124 - 120	L2x2x1/4	7'8-5/8"	3'7-7/16"	113.3 K=1.02	0.938	-3.89	20.15	0.193 [1]
T8	120 - 115	L2x2x1/4	8'5-7/8"	4'1-5/16"	126.2 K=1.00	0.938	-3.18	16.85	0.189 [1]
T9	115 - 110	L2x2x1/4	8'10-11/16"	4'3-27/32"	132.5 K=1.00	0.938	-3.66	15.29	0.239 [1]
T10	110 - 105	L2x2x1/4	9'3-23/32"	4'5-3/4"	137.4 K=1.00	0.938	-3.53	14.22	0.248 [1]
T11	105 - 100	L2x2x1/4	9'8-7/8"	4'8-1/32"	143.3 K=1.00	0.938	-3.49	13.07	0.267 [1]

Section No.	Elevation ft	Size	L ft	L_u ft	Kl/r	A in^2	P_u K	ϕP_n K	Ratio $\frac{P_u}{\phi P_n}$
T12	100 - 93.3333	L2x2x3/16	11'1-29/32"	5'5-13/32"	166.0 K=1.00	0.715	-3.77	7.42	0.508 [1]
T13	93.3333 - 86.6667	L2x2x1/4	11'8-17/32"	5'8-3/4"	175.8 K=1.00	0.938	-3.80	8.69	0.438 [1]
T14	86.6667 - 80	L2x2x1/4	12'3-1/4"	6'1/8"	184.4 K=1.00	0.938	-3.84	7.90	0.486 [1]
T15	80 - 73.3333	L2 1/2x2 1/2x1/4	12'10-3/32"	6'2-5/8"	152.1 K=1.00	1.190	-3.92	14.72	0.266 [1]
T16	73.3333 - 66.6667	L2 1/2x2 1/2x1/4	13'5-5/32"	6'6-1/4"	159.3 K=1.00	1.190	-3.99	13.42	0.298 [1]
T17	66.6667 - 60	L2 1/2x2 1/2x1/4	14'1/4"	6'9-27/32"	166.6 K=1.00	1.190	-4.15	12.27	0.338 [1]
T18	60 - 53.3333	L2 1/2x2 1/2x3/16	14'7-9/16"	7'1-13/16"	173.3 K=1.00	0.902	-4.10	8.60	0.477 [1]
T19	53.3333 - 46.6667	L2 1/2x2 1/2x3/16	15'3-1/8"	7'5-17/32"	180.9 K=1.00	0.902	-4.28	7.89	0.542 [1]
T20	46.6667 - 40	L2 1/2x2 1/2x1/4	15'10-11/16"	7'9-3/8"	190.1 K=1.00	1.190	-4.39	9.43	0.466 [1]
T21	40 - 30	L3x3x3/16	18'3-1/8"	8'11-3/4"	180.7 K=1.00	1.090	-5.09	9.55	0.533 [1]
T22	30 - 20	L3x3x1/4	19'1-3/16"	9'4-13/16"	190.5 K=1.00	1.440	-5.41	11.35	0.477 [1]
T23	20 - 10	L3 1/2x3 1/2x1/4	19'11-17/32"	9'9-19/32"	169.5 K=1.00	1.690	-5.37	16.83	0.319 [1]
T24	10 - 0	L3 1/2x3 1/2x1/4	20'9-31/32"	10'2-7/8"	177.1 K=1.00	1.690	-5.87	15.43	0.381 [1]

[1] P_u / ϕP_n controls

Secondary Horizontal Design Data (Compression)

Section No.	Elevation ft	Size	L ft	L_u ft	Kl/r	A in^2	P_u K	ϕP_n K	Ratio $\frac{P_u}{\phi P_n}$
T9	115 - 110	L2x2x1/4	7'4-3/16"	3'4-11/16"	112.0 K=1.08	0.938	-0.84	20.44	0.041 [1]

[1] P_u / ϕP_n controls

Top Girt Design Data (Compression)

Section No.	Elevation ft	Size	L ft	L_u ft	Kl/r	A in^2	P_u K	ϕP_n K	Ratio $\frac{P_u}{\phi P_n}$
T1	172 - 160	L1 1/2x1 1/2x1/8 KL/R > 200 (C) - 5	6'6-1/4"	6'1-5/16"	247.7 K=1.00	0.359	-0.04	1.68	0.023 [1]

[1] P_u / ϕP_n controls

Tension Checks

Leg Design Data (Tension)

Section No.	Elevation ft	Size	L ft	L_u ft	Kl/r	A in^2	P_u K	ϕP_n K	Ratio $\frac{P_u}{\phi P_n}$
T1	172 - 160	ROHN 2 STD	12'	4'	61.0	1.075	0.48	48.35	0.010 [1]
T2	160 - 140	ROHN 2 STD	20'	4'	61.0	1.075	7.28	48.35	0.150 [1]
T3	140 - 136	ROHN 2.5 EH	4'	4'	51.9	2.254	9.16	101.41	0.090 [1]
T4	136 - 132	ROHN 2.5 EH	4'	4'	51.9	2.254	11.93	101.41	0.118 [1]
T5	132 - 128	ROHN 2.5 EH	4'	4'	51.9	2.254	15.87	101.41	0.156 [1]
T6	128 - 124	ROHN 2.5 EH	4'	4'	51.9	2.254	20.78	101.41	0.205 [1]
T7	124 - 120	ROHN 2.5 EH	4'	4'	51.9	2.254	26.33	101.41	0.260 [1]
T8	120 - 115	ROHN 3 STD	5'1/8"	5'1/8"	51.7	2.228	32.47	100.28	0.324 [1]
T9	115 - 110	ROHN 3 STD	5'1/8"	2'5-1/32"	24.9	2.228	38.32	100.28	0.382 [1]
T10	110 - 105	P 3.5in x 0.216in w/ 1/2HSS 4.5in x 0.337in	5'1/8"	5'1/8"	54.2	4.432	45.05	199.45	0.226 [1]
T11	105 - 100	P 3.5in x 0.216in w/ 1/2HSS 4.5in x 0.337in	5'1/8"	5'1/8"	54.2	4.432	51.24	199.45	0.257 [1]
T12	100 - 93.3333	P 3.5in x 0.3in w/ 1/2HSS 4.5in x 0.337in	6'8-5/32"	6'8-5/32"	71.6	5.220	58.04	234.88	0.247 [1]
T13	93.3333 - 86.6667	P 3.5in x 0.3in w/ 1/2HSS 4.5in x 0.337in	6'8-5/32"	6'8-5/32"	71.6	5.220	65.54	234.88	0.279 [1]
T14	86.6667 - 80	P 3.5in x 0.3in w/ 1/2HSS 4.5in x 0.337in	6'8-5/32"	6'8-5/32"	71.6	5.220	72.59	234.88	0.309 [1]
T15	80 - 73.3333	P 4in x 0.318in w/ 1/2HSS 5.563in x 0.375in	6'8-5/32"	6'8-5/32"	63.1	6.734	79.42	303.05	0.262 [1]
T16	73.3333 - 66.6667	P 4in x 0.318in w/ 1/2HSS 5.563in x 0.375in	6'8-5/32"	6'8-5/32"	63.1	6.734	85.95	303.05	0.284 [1]
T17	66.6667 - 60	P 4in x 0.318in w/ 1/2HSS 5.563in x 0.375in	6'8-5/32"	6'8-5/32"	63.1	6.734	92.34	303.05	0.305 [1]
T18	60 - 53.3333	P 4.5in x 0.337in w/ 1/2HSS 5.563in x 0.375in	6'8-5/32"	6'8-5/32"	55.4	7.463	98.60	335.85	0.294 [1]
T19	53.3333 - 46.6667	P 4.5in x 0.337in w/ 1/2HSS 5.563in x 0.375in	6'8-5/32"	6'8-5/32"	55.4	7.463	104.58	335.85	0.311 [1]
T20	46.6667 - 40	P 4.5in x 0.337in w/ 1/2HSS 5.563in x 0.375in	6'8-5/32"	6'8-5/32"	55.4	7.463	110.57	335.85	0.329 [1]
T21	40 - 30	P 5.563in x 0.258in w/ 1/2HSS 6.625in x 0.432in	10'1/4"	10'1/4"	68.1	8.502	117.90	382.61	0.308 [1]
T22	30 - 20	P 5.563in x 0.258in w/ 1/2HSS 6.625in x 0.432in	10'1/4"	10'1/4"	68.1	8.502	126.73	382.61	0.331 [1]
T23	20 - 10	P 5.563in x 0.375in w/ 1/2HSS 6.625in x 0.432in	10'1/4"	10'1/4"	66.9	10.314	135.55	464.15	0.292 [1]
T24	10 - 0	P 5.563in x 0.375in w/ 1/2HSS 6.625in x 0.432in	10'1/4"	10'1/4"	66.9	10.314	143.56	464.15	0.309 [1]

[1] P_u / ϕP_n controls

Diagonal Design Data (Tension)

Section No.	Elevation ft	Size	L ft	L_u ft	Kl/r	A in^2	P_u K	ϕP_n K	Ratio $\frac{P_u}{\phi P_n}$
T1	172 - 160	L1 1/2x1 1/2x1/8	7'7-13/16"	3'7-3/16"	95.7	0.211	0.29	9.18	0.032 [1]
T2	160 - 140	L1 1/2x1 1/2x3/16	7'8-5/32"	3'7-7/16"	97.9	0.308	1.22	13.38	0.091 [1]
T3	140 - 136	L1 3/4x1 3/4x3/16	7'8-9/32"	3'7-3/16"	82.8	0.378	1.27	16.44	0.077 [1]
T4	136 - 132	L2x2x1/4	7'8-13/32"	3'7-5/16"	73.1	0.586	2.38	25.50	0.093 [1]
T5	132 - 128	L2x2x1/4	7'8-13/32"	3'7-5/16"	73.2	0.586	2.79	25.50	0.109 [1]
T6	128 - 124	L2x2x1/4	7'8-17/32"	3'7-5/16"	73.3	0.586	3.29	25.50	0.129 [1]
T7	124 - 120	L2x2x1/4	7'8-5/8"	3'7-7/16"	73.3	0.586	3.81	25.50	0.149 [1]
T8	120 - 115	L2x2x1/4	8'5-7/8"	4'1-	83.1	0.586	2.94	25.50	0.115 [1]

Section No.	Elevation ft	Size	L ft	L_u ft	Kl/r	A in^2	P_u K	ϕP_n K	Ratio $\frac{P_u}{\phi P_n}$
T9	115 - 110	L2x2x1/4	8'10-11/16"	5/16" 4'3-27/32"	87.1	0.586	3.59	25.50	0.141 [1]
T10	110 - 105	L2x2x1/4	9'3-23/32"	4'5-3/4"	90.3	0.586	3.49	25.50	0.137 [1]
T11	105 - 100	L2x2x1/4	9'8-7/8"	4'8-1/32"	94.5	0.586	3.51	25.50	0.138 [1]
T12	100 - 93.3333	L2x2x3/16	11'1-29/32"	5'5-13/32"	108.0	0.448	3.73	19.50	0.191 [1]
T13	93.3333 - 86.6667	L2x2x1/4	11'8-17/32"	5'8-3/4"	114.9	0.586	3.80	25.50	0.149 [1]
T14	86.6667 - 80	L2x2x1/4	12'3-1/4"	6'1/8"	120.4	0.586	3.80	25.50	0.149 [1]
T15	80 - 73.3333	L2 1/2x2 1/2x1/4	12'10-3/32"	6'2-5/8"	99.1	0.775	3.89	33.73	0.115 [1]
T16	73.3333 - 66.6667	L2 1/2x2 1/2x1/4	13'5-5/32"	6'6-1/4"	103.7	0.775	3.97	33.73	0.118 [1]
T17	66.6667 - 60	L2 1/2x2 1/2x1/4	14'1/4"	6'9-27/32"	108.3	0.775	4.12	33.73	0.122 [1]
T18	60 - 53.3333	L2 1/2x2 1/2x3/16	14'7-9/16"	7'1-13/16"	111.9	0.589	4.11	25.60	0.160 [1]
T19	53.3333 - 46.6667	L2 1/2x2 1/2x3/16	15'3-1/8"	7'5-17/32"	116.7	0.589	4.22	25.60	0.165 [1]
T20	46.6667 - 40	L2 1/2x2 1/2x1/4	15'10-11/16"	7'9-3/8"	123.0	0.775	4.38	33.73	0.130 [1]
T21	40 - 30	L3x3x3/16	18'3-1/8"	8'11-3/4"	116.3	0.712	5.11	30.97	0.165 [1]
T22	30 - 20	L3x3x1/4	19'1-3/16"	9'4-13/16"	122.8	0.939	5.28	40.86	0.129 [1]
T23	20 - 10	L3 1/2x3 1/2x1/4	19'11-17/32"	9'9-19/32"	109.5	1.127	5.41	49.02	0.110 [1]
T24	10 - 0	L3 1/2x3 1/2x1/4	20'9-31/32"	10'2-7/8"	114.3	1.127	5.59	49.02	0.114 [1]

[1] P_u / ϕP_n controls

Secondary Horizontal Design Data (Tension)

Section No.	Elevation ft	Size	L ft	L_u ft	Kl/r	A in^2	P_u K	ϕP_n K	Ratio $\frac{P_u}{\phi P_n}$
T9	115 - 110	L2x2x1/4	7'4-3/16"	3'4-11/16"	139.0	0.563	0.84	24.49	0.034 [1]

[1] P_u / ϕP_n controls

Top Girt Design Data (Tension)

Section No.	Elevation ft	Size	L ft	L_u ft	Kl/r	A in^2	P_u K	ϕP_n K	Ratio $\frac{P_u}{\phi P_n}$
T1	172 - 160	L1 1/2x1 1/2x1/8	6'6-1/4"	6'1-5/16"	163.1	0.211	0.03	9.18	0.003 [1]

[1] P_u / ϕP_n controls

Section Capacity Table

Section No.	Elevation ft	Component Type	Size	Critical Element	P K	$øP_{allow}$ K	% Capacity	Pass Fail
T1	172 - 160	Leg	ROHN 2 STD	1	-0.82	38.68	2.1	Pass
T2	160 - 140	Leg	ROHN 2 STD	25	-9.24	38.68	23.9	Pass
T3	140 - 136	Leg	ROHN 2.5 EH	58	-11.50	87.41	13.2	Pass
T4	136 - 132	Leg	ROHN 2.5 EH	67	-16.26	87.41	18.6	Pass
T5	132 - 128	Leg	ROHN 2.5 EH	76	-21.27	87.41	24.3	Pass
T6	128 - 124	Leg	ROHN 2.5 EH	85	-27.58	87.41	31.5	Pass
T7	124 - 120	Leg	ROHN 2.5 EH	94	-34.14	87.41	39.1	Pass
T8	120 - 115	Leg	ROHN 3 STD	103	-40.60	86.63	46.9	Pass
T9	115 - 110	Leg	ROHN 3 STD	114	-48.32	99.95	48.3	Pass
T10	110 - 105	Leg	P 3.5in x 0.216in w/ 1/2HSS 4.5in x 0.337in	126	-55.79	159.57	35.0	Pass
T11	105 - 100	Leg	P 3.5in x 0.216in w/ 1/2HSS 4.5in x 0.337in	135	-62.78	159.57	39.3	Pass
T12	100 - 93.3333	Leg	P 3.5in x 0.3in w/ 1/2HSS 4.5in x 0.337in	144	-70.35	160.21	43.9	Pass
T13	93.3333 - 86.6667	Leg	P 3.5in x 0.3in w/ 1/2HSS 4.5in x 0.337in	153	-78.87	160.21	49.2	Pass
T14	86.6667 - 80	Leg	P 3.5in x 0.3in w/ 1/2HSS 4.5in x 0.337in	162	-86.87	160.21	54.2	Pass
T15	80 - 73.3333	Leg	P 4in x 0.318in w/ 1/2HSS 5.563in x 0.375in	171	-94.78	229.21	41.4	Pass
T16	73.3333 - 66.6667	Leg	P 4in x 0.318in w/ 1/2HSS 5.563in x 0.375in	180	-102.46	229.20	44.7	Pass
T17	66.6667 - 60	Leg	P 4in x 0.318in w/ 1/2HSS 5.563in x 0.375in	189	-110.00	229.21	48.0	Pass
T18	60 - 53.3333	Leg	P 4.5in x 0.337in w/ 1/2HSS 5.563in x 0.375in	198	-117.46	271.62	43.2	Pass
T19	53.3333 - 46.6667	Leg	P 4.5in x 0.337in w/ 1/2HSS 5.563in x 0.375in	207	-124.54	271.62	45.9	Pass
T20	46.6667 - 40	Leg	P 4.5in x 0.337in w/ 1/2HSS 5.563in x 0.375in	216	-131.79	271.62	48.5	Pass
T21	40 - 30	Leg	P 5.563in x 0.258in w/ 1/2HSS 6.625in x 0.432in	225	-140.71	279.02	50.4	Pass
T22	30 - 20	Leg	P 5.563in x 0.258in w/ 1/2HSS 6.625in x 0.432in	234	-151.32	279.02	54.2	Pass
T23	20 - 10	Leg	P 5.563in x 0.375in w/ 1/2HSS 6.625in x 0.432in	243	-162.42	342.30	47.4	Pass
T24	10 - 0	Leg	P 5.563in x 0.375in w/ 1/2HSS 6.625in x 0.432in	252	-172.48	342.30	50.4	Pass
T1	172 - 160	Diagonal	L1 1/2x1 1/2x1/8	11	-0.33	5.06	6.5	Pass
T2	160 - 140	Diagonal	L1 1/2x1 1/2x3/16	28	-1.22	7.21	16.9	Pass
T3	140 - 136	Diagonal	L1 3/4x1 3/4x3/16	62	-1.30	11.78	11.1	Pass
T4	136 - 132	Diagonal	L2x2x1/4	71	-2.44	21.22	11.5	Pass
T5	132 - 128	Diagonal	L2x2x1/4	80	-2.82	21.19	13.3	Pass
T6	128 - 124	Diagonal	L2x2x1/4	88	-3.25	21.18	15.3	Pass
T7	124 - 120	Diagonal	L2x2x1/4	98	-3.89	21.16	18.4	Pass
T8	120 - 115	Diagonal	L2x2x1/4	107	-3.18	17.69	18.0	Pass
T9	115 - 110	Diagonal	L2x2x1/4	116	-3.66	16.05	22.8	Pass
T10	110 - 105	Diagonal	L2x2x1/4	128	-3.53	14.93	23.7	Pass
T11	105 - 100	Diagonal	L2x2x1/4	137	-3.49	13.72	25.4	Pass
T12	100 - 93.3333	Diagonal	L2x2x3/16	148	-3.77	7.80	48.4	Pass
T13	93.3333 - 86.6667	Diagonal	L2x2x1/4	157	-3.80	9.13	41.7	Pass
T14	86.6667 - 80	Diagonal	L2x2x1/4	166	-3.84	8.29	46.3	Pass
T15	80 - 73.3333	Diagonal	L2 1/2x2 1/2x1/4	175	-3.92	15.46	25.4	Pass
T16	73.3333 - 66.6667	Diagonal	L2 1/2x2 1/2x1/4	184	-3.99	14.09	28.3	Pass
T17	66.6667 - 60	Diagonal	L2 1/2x2 1/2x1/4	193	-4.15	12.88	32.2	Pass
T18	60 - 53.3333	Diagonal	L2 1/2x2 1/2x3/16	202	-4.10	9.03	45.5	Pass
T19	53.3333 - 46.6667	Diagonal	L2 1/2x2 1/2x3/16	211	-4.28	8.28	51.6	Pass
T20	46.6667 - 40	Diagonal	L2 1/2x2 1/2x1/4	220	-4.39	9.90	44.3	Pass
T21	40 - 30	Diagonal	L3x3x3/16	229	-5.09	10.03	50.8	Pass
T22	30 - 20	Diagonal	L3x3x1/4	238	-5.41	11.92	45.4	Pass
T23	20 - 10	Diagonal	L3 1/2x3 1/2x1/4	247	-5.37	17.67	30.4	Pass
T24	10 - 0	Diagonal	L3 1/2x3 1/2x1/4	256	-5.87	16.20	36.2	Pass
T9	115 - 110	Secondary	L2x2x1/4	122	-0.84	21.46	3.9	Pass

Section No.	Elevation ft	Component Type	Size	Critical Element	P K	$øP_{allow}$ K	% Capacity	Pass Fail
T1	172 - 160	Horizontal Top Girt	L1 1/2x1 1/2x1/8	5	-0.04	1.76	2.2	Pass
							Summary	
						Leg (T22)	54.2	Pass
						Diagonal (T19)	51.6	Pass
						Secondary Horizontal (T9)	3.9	Pass
						Top Girt (T1)	2.2	Pass
						Bolt Checks	64.8	Pass
						RATING =	**64.8**	**Pass**

***NOTE: Above stress ratios for reinforced sections are approximate. More exact calculations are presented in Appendix C.**

APPENDIX B

BASE LEVEL DRAWING

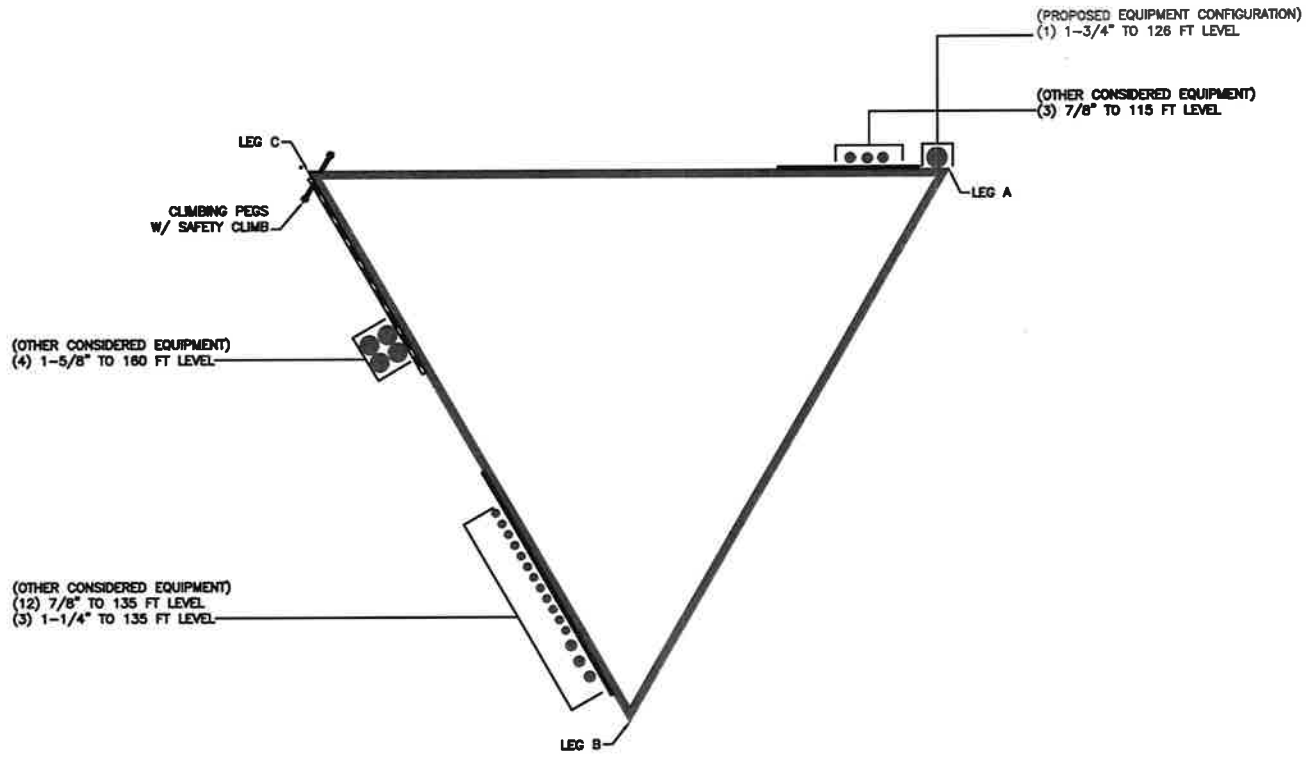
(PROPOSED EQUIPMENT CONFIGURATION)
(1) 1-3/4" TO 126 FT LEVEL
(OTHER CONSIDERED EQUIPMENT)
(3) 7/8" TO 115 FT LEVEL
LEG C
LEG A
CLIMBING PEGS
W/ SAFETY CLIMB
(OTHER CONSIDERED EQUIPMENT)
(4) 1-5/8" TO 160 FT LEVEL
(OTHER CONSIDERED EQUIPMENT)
(12) 7/8" TO 135 FT LEVEL
(3) 1-1/4" TO 135 FT LEVEL
LEG B

APPENDIX C

ADDITIONAL CALCULATIONS

Built-Up Leg Reinforcement Tool

CROWN CASTLE

Site Data	
BU#:	873681
Site Name:	Chicago
Order #:	559909 Rev 2
Section:	110ft - 105ft

Leg Axial Load		
Compression, Pu:	55.79	kips

Reinforcement Type
Split Pipe

Ratings (per TIA-222-H Section 15.5)		
Spacing Req.:	O.K.	
Reinforced Leg:	35.0%	Pass

Connection and Analysis Options		
TIA-222 Revision:	H	
Tower Type:	Self Support	
Consider Leg Load at Time of Modification:		
End Connections:	Fixed	
Leg Crushing Check:	No	
Applied Load:	Axial	
Slenderness Ratio:	KL/r Modified	
Intermediate Connection:	Bolted	
Intermediate Spacing:	18	in
Split Pipe K_i Factor Override:		

Check Limitation	
Apply TIA-222-H Section 15.5:	☑
N/A	☐

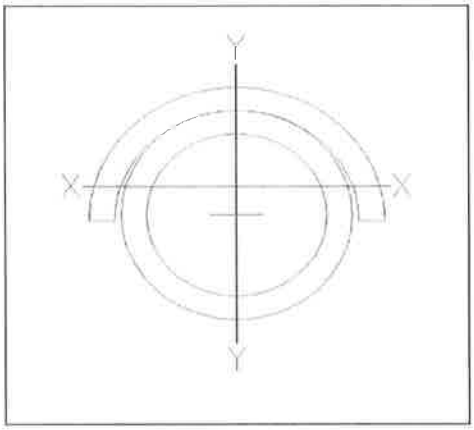

Leg Data		
Diameter:	3.5	in
Thickness:	0.216	in
Yield (Fy):	50	ksi
Unbraced Length:	60.125	in

Split Pipe Data		
Outside Diameter:	4.5	in
Thickness:	0.337	in
Yield (Fy):	50	ksi

TNX K Factor Adjustment	1.124

Built-Up Section Properties					
Area:	4.4322	in^2	Polar Moment of Inertia, J:	6.0343	in^4
Moment of Intertia, I_{xx}:	5.4397	in^4	Moment of Intertia, I_{yy}:	7.8224	in^4
Eccentricty, e:	0.5793	in	Plastic Neutral Axis:	0.5793	in

Version 10.0.4

Built-Up Leg Reinforcement Tool

CROWN CASTLE

Site Data	
BU#:	873681
Site Name:	Chicago
Order #:	559909 Rev 2
Section:	105ft - 100ft

Reinforcement Type
Split Pipe

Connection and Analysis Options		
TIA-222 Revision:	H	
Tower Type:	Self Support	
Consider Leg Load at Time of Modification:		
End Connections:	Fixed	
Leg Crushing Check:	No	
Applied Load:	Axial	
Slenderness Ratio:	KL/r Modified	
Intermediate Connection:	Bolted	
Intermediate Spacing:	18	in
Split Pipe K_i Factor Override:		

Leg Data		
Diameter:	3.5	in
Thickness:	0.216	in
Yield (Fy):	50	ksi
Unbraced Length:	60.125	in

Split Pipe Data		
Outside Diameter:	4.5	in
Thickness:	0.337	in
Yield (Fy):	50	ksi

Leg Axial Load		
Compression, Pu:	62.78	kips

Ratings (per TIA-222-H Section 15.5)		
Spacing Req.:	O.K.	
Reinforced Leg:	39.4%	Pass

Check Limitation	
Apply TIA-222-H Section 15.5:	☑
N/A	☐

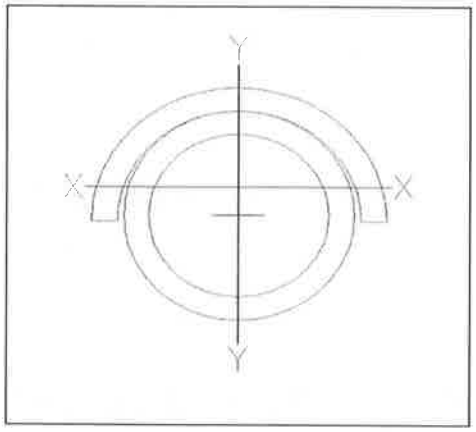

TNX K Factor Adjustment	1.124

Built-Up Section Properties					
Area:	4.4322	in^2	Polar Moment of Inertia, J:	6.0343	in^4
Moment of Intertia, I_{xx}:	5.4397	in^4	Moment of Intertia, I_{yy}:	7.8224	in^4
Eccentricty, e:	0.5793	in	Plastic Neutral Axis:	0.5793	in

Version 10.0.4

Built-Up Leg Reinforcement Tool

CROWN CASTLE

Site Data	
BU#:	873681
Site Name:	Chicago
Order #:	559909 Rev 2
Section:	100ft - 93.3ft

Leg Axial Load		
Compression, Pu:	70.35	kips

Reinforcement Type
Split Pipe

Ratings (per TIA-222-H Section 15.5)		
Spacing Req.:	O.K.	
Reinforced Leg:	43.9%	Pass

Connection and Analysis Options		
TIA-222 Revision:	H	
Tower Type:	Self Support	
Consider Leg Load at Time of Modification:		
End Connections:	Fixed	
Leg Crushing Check:	No	
Applied Load:	Axial	
Slenderness Ratio:	KL/r Modified	
Intermediate Connection:	Bolted	
Intermediate Spacing:	18	in
Split Pipe K_i Factor Override:		

Check Limitation	
Apply TIA-222-H Section 15.5:	☑
N/A	☐

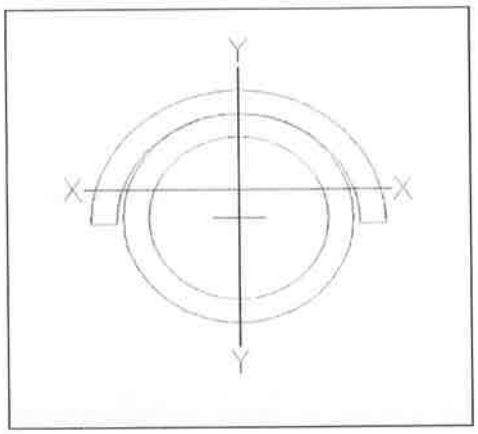

Leg Data		
Diameter:	3.5	in
Thickness:	0.3	in
Yield (Fy):	50	ksi
Unbraced Length:	80.15625	in

Split Pipe Data		
Outside Diameter:	4.5	in
Thickness:	0.337	in
Yield (Fy):	50	ksi

TNX K Factor Adjustment	1.073

Built-Up Section Properties					
Area:	5.2196	in^2	Polar Moment of Inertia, J:	7.7886	in^4
Moment of Intertia, I_{xx}:	6.5412	in^4	Moment of Intertia, I_{yy}:	8.6996	in^4
Eccentricty, e:	0.4919	in	Plastic Neutral Axis:	0.4919	in

Version 10.0.4

Built-Up Leg Reinforcement Tool

CROWN CASTLE

Site Data	
BU#:	873681
Site Name:	Chicago
Order #:	559909 Rev 2
Section:	93.3ft - 86.7ft

Leg Axial Load		
Compression, Pu:	78.87	kips

Reinforcement Type
Split Pipe

Ratings (per TIA-222-H Section 15.5)		
Spacing Req.:	O.K.	
Reinforced Leg:	49.2%	Pass

Connection and Analysis Options		
TIA-222 Revision:	H	
Tower Type:	Self Support	
Consider Leg Load at Time of Modification:		
End Connections:	Fixed	
Leg Crushing Check:	No	
Applied Load:	Axial	
Slenderness Ratio:	KL/r Modified	
Intermediate Connection:	Bolted	
Intermediate Spacing:	18	in
Split Pipe K_i Factor Override:		

Check Limitation	
Apply TIA-222-H Section 15.5:	☑
N/A	☐

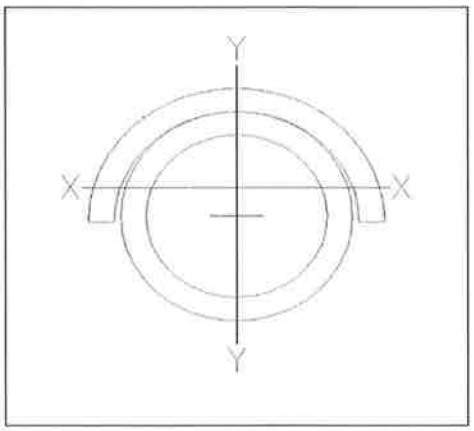

Leg Data		
Diameter:	3.5	in
Thickness:	0.3	in
Yield (Fy):	50	ksi
Unbraced Length:	80.15625	in

Split Pipe Data		
Outside Diameter:	4.5	in
Thickness:	0.337	in
Yield (Fy):	50	ksi

TNX K Factor Adjustment	1.073

Built-Up Section Properties					
Area:	5.2196	in^2	Polar Moment of Inertia, J:	7.7886	in^4
Moment of Intertia, I_{xx}:	6.5412	in^4	Moment of Intertia, I_{yy}:	8.6996	in^4
Eccentricty, e:	0.4919	in	Plastic Neutral Axis:	0.4919	in

Version 10.0.4

Built-Up Leg Reinforcement Tool

CROWN CASTLE

Site Data	
BU#:	873681
Site Name:	Chicago
Order #:	559909 Rev 2
Section:	86.7ft - 80ft

Leg Axial Load		
Compression, Pu:	86.87	kips

Reinforcement Type
Split Pipe

Ratings (per TIA-222-H Section 15.5)		
Spacing Req.:	O.K.	
Reinforced Leg:	54.2%	Pass

Connection and Analysis Options		
TIA-222 Revision:	H	
Tower Type:	Self Support	
Consider Leg Load at Time of Modification:		
End Connections:	Fixed	
Leg Crushing Check:	No	
Applied Load:	Axial	
Slenderness Ratio:	KL/r Modified	
Intermediate Connection:	Bolted	
Intermediate Spacing:	18	in
Split Pipe K_i Factor Override:		

Check Limitation	
Apply TIA-222-H Section 15.5:	☑
N/A	☐

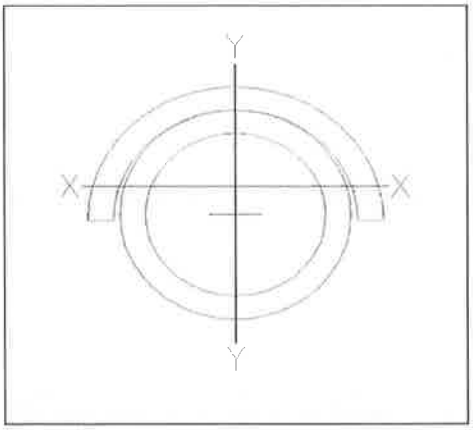

Leg Data		
Diameter:	3.5	in
Thickness:	0.3	in
Yield (Fy):	50	ksi
Unbraced Length:	80.15625	in

Split Pipe Data		
Outside Diameter:	4.5	in
Thickness:	0.337	in
Yield (Fy):	50	ksi

TNX K Factor Adjustment	1.073

Built-Up Section Properties					
Area:	5.2196	in^2	Polar Moment of Inertia, J:	7.7886	in^4
Moment of Intertia, I_{xx}:	6.5412	in^4	Moment of Intertia, I_{yy}:	8.6996	in^4
Eccentricty, e:	0.4919	in	Plastic Neutral Axis:	0.4919	in

Version 10.0.4

Built-Up Leg Reinforcement Tool

CROWN CASTLE

Site Data	
BU#:	873681
Site Name:	Chicago
Order #:	559909 Rev 2
Section:	80ft - 73.3ft

Leg Axial Load		
Compression, Pu:	94.78	kips

Reinforcement Type
Split Pipe

Ratings (per TIA-222-H Section 15.5)		
Spacing Req.:	O.K.	
Reinforced Leg:	41.4%	Pass

Connection and Analysis Options		
TIA-222 Revision:	H	
Tower Type:	Self Support	
Consider Leg Load at Time of Modification:		
End Connections:	Fixed	
Leg Crushing Check:	No	
Applied Load:	Axial	
Slenderness Ratio:	KL/r Modified	
Intermediate Connection:	Bolted	
Intermediate Spacing:	18	in
Split Pipe K_i Factor Override:		

Check Limitation	
Apply TIA-222-H Section 15.5:	☑
N/A	☐

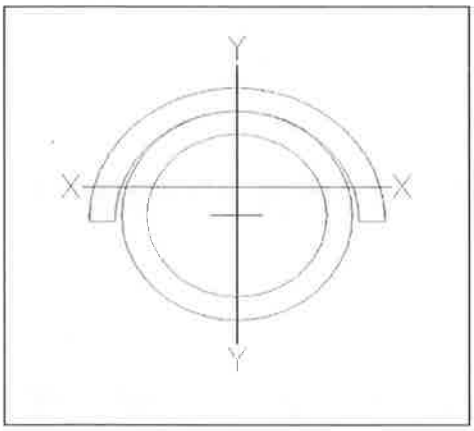

Leg Data		
Diameter:	4	in
Thickness:	0.318	in
Yield (Fy):	50	ksi
Unbraced Length:	80.15625	in

Split Pipe Data		
Outside Diameter:	5.563	in
Thickness:	0.375	in
Yield (Fy):	50	ksi

TNX K Factor Adjustment	1.061

Built-Up Section Properties					
Area:	6.7344	in^2	Polar Moment of Inertia, J:	12.5602	in^4
Moment of Intertia, I_{xx}:	10.8512	in^4	Moment of Intertia, I_{yy}:	16.6154	in^4
Eccentricty, e:	0.5662	in	Plastic Neutral Axis:	0.5662	in

Version 10.0.4

Built-Up Leg Reinforcement Tool

CROWN CASTLE

Site Data	
BU#:	873681
Site Name:	Chicago
Order #:	559909 Rev 2
Section:	73.3ft - 66.7ft

Leg Axial Load		
Compression, Pu:	102.46	kips

Reinforcement Type
Split Pipe

Ratings (per TIA-222-H Section 15.5)		
Spacing Req.:	O.K.	
Reinforced Leg:	44.7%	Pass

Connection and Analysis Options		
TIA-222 Revision:	H	
Tower Type:	Self Support	
Consider Leg Load at Time of Modification:		
End Connections:	Fixed	
Leg Crushing Check:	No	
Applied Load:	Axial	
Slenderness Ratio:	KL/r Modified	
Intermediate Connection:	Bolted	
Intermediate Spacing:	18	in
Split Pipe K_i Factor Override:		

Check Limitation	
Apply TIA-222-H Section 15.5:	☑
N/A	☐

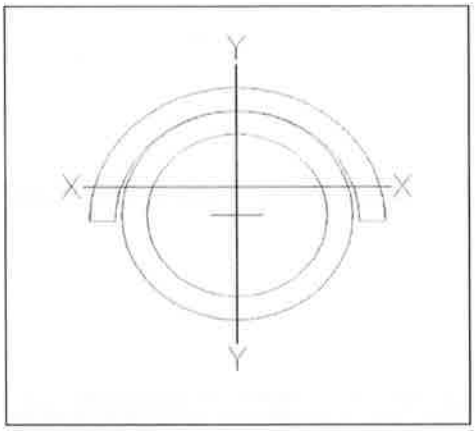

Leg Data		
Diameter:	4	in
Thickness:	0.318	in
Yield (Fy):	50	ksi
Unbraced Length:	80.15625	in

Split Pipe Data		
Outside Diameter:	5.563	in
Thickness:	0.375	in
Yield (Fy):	50	ksi

TNX K Factor Adjustment	1.061

Built-Up Section Properties					
Area:	6.7344	in^2	Polar Moment of Inertia, J:	12.5602	in^4
Moment of Intertia, I_{xx}:	10.8512	in^4	Moment of Intertia, I_{yy}:	16.6154	in^4
Eccentricty, e:	0.5662	in	Plastic Neutral Axis:	0.5662	in

Version 10.0.4

Built-Up Leg Reinforcement Tool

CROWN CASTLE

Site Data	
BU#:	873681
Site Name:	Chicago
Order #:	559909 Rev 2
Section:	66.7ft - 60ft

Leg Axial Load		
Compression, Pu:	110	kips

Reinforcement Type
Split Pipe

Ratings (per TIA-222-H Section 15.5)		
Spacing Req.:	O.K.	
Reinforced Leg:	48.0%	Pass

Connection and Analysis Options		
TIA-222 Revision:	H	
Tower Type:	Self Support	
Consider Leg Load at Time of Modification:		
End Connections:	Fixed	
Leg Crushing Check:	No	
Applied Load:	Axial	
Slenderness Ratio:	KL/r Modified	
Intermediate Connection:	Bolted	
Intermediate Spacing:	18	in
Split Pipe K_i Factor Override:		

Check Limitation	
Apply TIA-222-H Section 15.5:	☑
N/A	☐

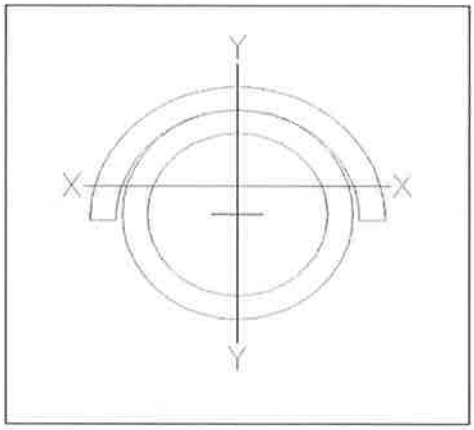

Leg Data		
Diameter:	4	in
Thickness:	0.318	in
Yield (Fy):	50	ksi
Unbraced Length:	80.15625	in

Split Pipe Data		
Outside Diameter:	5.563	in
Thickness:	0.375	in
Yield (Fy):	50	ksi

TNX K Factor Adjustment	1.061

Built-Up Section Properties					
Area:	6.7344	in^2	Polar Moment of Inertia, J:	12.5602	in^4
Moment of Intertia, I_{xx}:	10.8512	in^4	Moment of Intertia, I_{yy}:	16.6154	in^4
Eccentricty, e:	0.5662	in	Plastic Neutral Axis:	0.5662	in

Version 10.0.4

Built-Up Leg Reinforcement Tool

CROWN CASTLE

Site Data	
BU#:	873681
Site Name:	Chicago
Order #:	559909 Rev 2
Section:	60ft - 53.3ft

Leg Axial Load		
Compression, Pu:	117.46	kips

Reinforcement Type
Split Pipe

Ratings (per TIA-222-H Section 15.5)		
Spacing Req.:	O.K.	
Reinforced Leg:	43.2%	Pass

Connection and Analysis Options		
TIA-222 Revision:	H	
Tower Type:	Self Support	
Consider Leg Load at Time of Modification:		
End Connections:	Fixed	
Leg Crushing Check:	No	
Applied Load:	Axial	
Slenderness Ratio:	KL/r Modified	
Intermediate Connection:	Bolted	
Intermediate Spacing:	18	in
Split Pipe K_i Factor Override:		

Check Limitation	
Apply TIA-222-H Section 15.5:	☑
N/A	☐

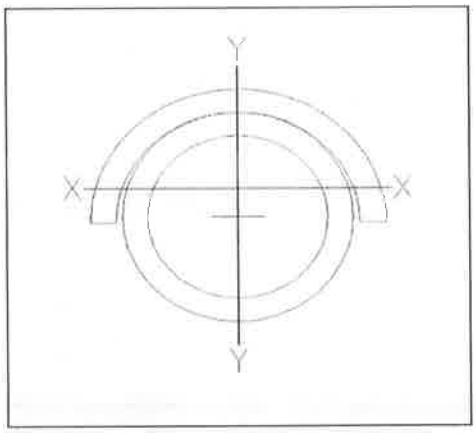

Leg Data		
Diameter:	4.5	in
Thickness:	0.337	in
Yield (Fy):	50	ksi
Unbraced Length:	80.15625	in

Split Pipe Data		
Outside Diameter:	5.563	in
Thickness:	0.375	in
Yield (Fy):	50	ksi

TNX K Factor Adjustment	1.079

Built-Up Section Properties					
Area:	7.4634	in^2	Polar Moment of Inertia, J:	19.2210	in^4
Moment of Intertia, I_{xx}:	15.6313	in^4	Moment of Intertia, I_{yy}:	19.9458	in^4
Eccentricty, e:	0.6133	in	Plastic Neutral Axis:	0.6133	in

Version 10.0.4

Built-Up Leg Reinforcement Tool

CROWN CASTLE

Site Data	
BU#:	873681
Site Name:	Chicago
Order #:	559909 Rev 2
Section:	53.3ft - 46.7ft

Leg Axial Load		
Compression, Pu:	124.54	kips

Reinforcement Type
Split Pipe

Ratings (per TIA-222-H Section 15.5)		
Spacing Req.:	O.K.	
Reinforced Leg:	45.8%	Pass

Connection and Analysis Options		
TIA-222 Revision:	H	
Tower Type:	Self Support	
Consider Leg Load at Time of Modification:		
End Connections:	Fixed	
Leg Crushing Check:	No	
Applied Load:	Axial	
Slenderness Ratio:	KL/r Modified	
Intermediate Connection:	Bolted	
Intermediate Spacing:	18	in
Split Pipe K_i Factor Override:		

Check Limitation	
Apply TIA-222-H Section 15.5:	☑
N/A	☐

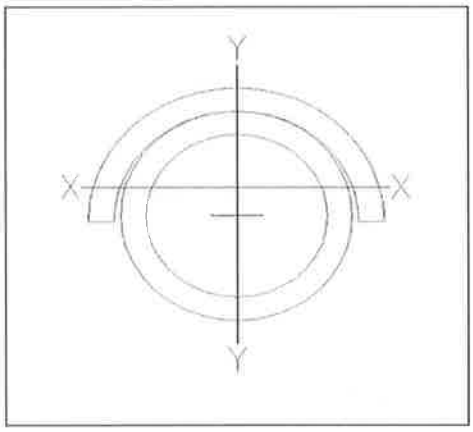

Leg Data		
Diameter:	4.5	in
Thickness:	0.337	in
Yield (Fy):	50	ksi
Unbraced Length:	80.15625	in

Split Pipe Data		
Outside Diameter:	5.563	in
Thickness:	0.375	in
Yield (Fy):	50	ksi

TNX K Factor Adjustment	1.079

Built-Up Section Properties					
Area:	7.4634	in^2	Polar Moment of Inertia, J:	19.2210	in^4
Moment of Intertia, I_{xx}:	15.6313	in^4	Moment of Intertia, I_{yy}:	19.9458	in^4
Eccentricty, e:	0.6133	in	Plastic Neutral Axis:	0.6133	in

Version 10.0.4

Built-Up Leg Reinforcement Tool

CROWN CASTLE

Site Data	
BU#:	873681
Site Name:	Chicago
Order #:	559909 Rev 2
Section:	46.7ft - 40ft

Leg Axial Load		
Compression, Pu:	131.79	kips

Reinforcement Type
Split Pipe

Ratings (per TIA-222-H Section 15.5)		
Spacing Req.:	O.K.	
Reinforced Leg:	48.5%	Pass

Connection and Analysis Options		
TIA-222 Revision:	H	
Tower Type:	Self Support	
Consider Leg Load at Time of Modification:		
End Connections:	Fixed	
Leg Crushing Check:	No	
Applied Load:	Axial	
Slenderness Ratio:	KL/r Modified	
Intermediate Connection:	Bolted	
Intermediate Spacing:	18	in
Split Pipe K_i Factor Override:		

Check Limitation	
Apply TIA-222-H Section 15.5:	☑
N/A	☐

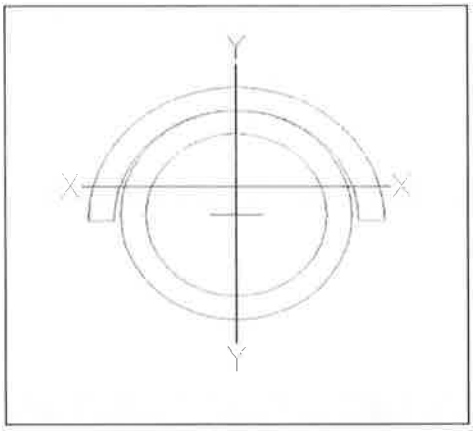

Leg Data		
Diameter:	4.5	in
Thickness:	0.337	in
Yield (Fy):	50	ksi
Unbraced Length:	80.15625	in

Split Pipe Data		
Outside Diameter:	5.563	in
Thickness:	0.375	in
Yield (Fy):	50	ksi

TNX K Factor Adjustment	1.079

Built-Up Section Properties					
Area:	7.4634	in^2	Polar Moment of Inertia, J:	19.2210	in^4
Moment of Intertia, I_{xx}:	15.6313	in^4	Moment of Intertia, I_{yy}:	19.9458	in^4
Eccentricty, e:	0.6133	in	Plastic Neutral Axis:	0.6133	in

Version 10.0.4

Built-Up Leg Reinforcement Tool

CROWN CASTLE

Site Data	
BU#:	873681
Site Name:	Chicago
Order #:	559909 Rev 2
Section:	40ft - 30ft

Leg Axial Load		
Compression, Pu:	140.71	kips

Reinforcement Type
Split Pipe

Ratings (per TIA-222-H Section 15.5)		
Spacing Req.:	O.K.	
Reinforced Leg:	50.4%	Pass

Connection and Analysis Options		
TIA-222 Revision:	H	
Tower Type:	Self Support	
Consider Leg Load at Time of Modification:		
End Connections:	Fixed	
Leg Crushing Check:	No	
Applied Load:	Axial	
Slenderness Ratio:	KL/r Modified	
Intermediate Connection:	Bolted	
Intermediate Spacing:	18	in
Split Pipe K_i Factor Override:		

Check Limitation	
Apply TIA-222-H Section 15.5:	☑
N/A	☐

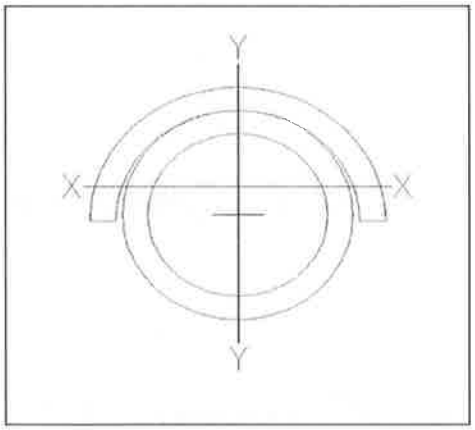

Leg Data		
Diameter:	5.563	in
Thickness:	0.258	in
Yield (Fy):	50	ksi
Unbraced Length:	120.02083	in

Split Pipe Data		
Outside Diameter:	6.625	in
Thickness:	0.432	in
Yield (Fy):	50	ksi

TNX K Factor Adjustment	1.037

Built-Up Section Properties					
Area:	8.5023	in^2	Polar Moment of Inertia, J:	30.3244	in^4
Moment of Intertia, I_{xx}:	26.4994	in^4	Moment of Intertia, I_{yy}:	35.4075	in^4
Eccentricty, e:	0.9270	in	Plastic Neutral Axis:	0.9270	in

Version 10.0.4

Built-Up Leg Reinforcement Tool

CROWN CASTLE

Site Data	
BU#:	873681
Site Name:	Chicago
Order #:	559909 Rev 2
Section:	30ft - 20ft

Leg Axial Load		
Compression, Pu:	151.32	kips

Reinforcement Type
Split Pipe

Ratings (per TIA-222-H Section 15.5)		
Spacing Req.:	O.K.	
Reinforced Leg:	54.2%	Pass

Connection and Analysis Options		
TIA-222 Revision:	H	
Tower Type:	Self Support	
Consider Leg Load at Time of Modification:		
End Connections:	Fixed	
Leg Crushing Check:	No	
Applied Load:	Axial	
Slenderness Ratio:	KL/r Modified	
Intermediate Connection:	Bolted	
Intermediate Spacing:	18	in
Split Pipe K_i Factor Override:		

Check Limitation	
Apply TIA-222-H Section 15.5:	☑
N/A	☐

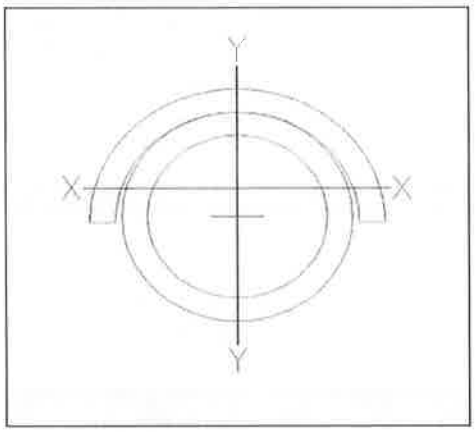

Leg Data		
Diameter:	5.563	in
Thickness:	0.258	in
Yield (Fy):	50	ksi
Unbraced Length:	120.02083	in

Split Pipe Data		
Outside Diameter:	6.625	in
Thickness:	0.432	in
Yield (Fy):	50	ksi

TNX K Factor Adjustment	1.037

Built-Up Section Properties					
Area:	8.5023	in^2	Polar Moment of Inertia, J:	30.3244	in^4
Moment of Intertia, I_{xx}:	26.4994	in^4	Moment of Intertia, I_{yy}:	35.4075	in^4
Eccentricty, e:	0.9270	in	Plastic Neutral Axis:	0.9270	in

Version 10.0.4

Built-Up Leg Reinforcement Tool

CROWN CASTLE

Site Data	
BU#:	873681
Site Name:	Chicago
Order #:	559909 Rev 2
Section:	20ft - 10ft

Leg Axial Load		
Compression, Pu:	162.42	kips

Reinforcement Type
Split Pipe

Ratings (per TIA-222-H Section 15.5)		
Spacing Req.:	O.K.	
Reinforced Leg:	47.4%	Pass

Connection and Analysis Options		
TIA-222 Revision:	H	
Tower Type:	Self Support	
Consider Leg Load at Time of Modification:		
End Connections:	Fixed	
Leg Crushing Check:	No	
Applied Load:	Axial	
Slenderness Ratio:	KL/r Modified	
Intermediate Connection:	Bolted	
Intermediate Spacing:	18	in
Split Pipe K_i Factor Override:		

Check Limitation	
Apply TIA-222-H Section 15.5:	☑
N/A	☐

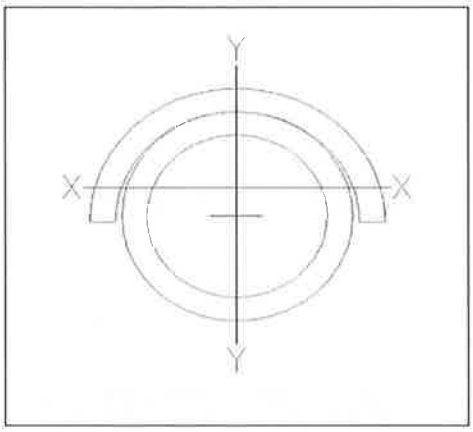

Leg Data		
Diameter:	5.563	in
Thickness:	0.375	in
Yield (Fy):	50	ksi
Unbraced Length:	120.02083	in

Split Pipe Data		
Outside Diameter:	6.625	in
Thickness:	0.432	in
Yield (Fy):	50	ksi

TNX K Factor Adjustment	1.039

Built-Up Section Properties					
Area:	10.3144	in^2	Polar Moment of Inertia, J:	41.3413	in^4
Moment of Intertia, I_{xx}:	33.2915	in^4	Moment of Intertia, I_{yy}:	40.9160	in^4
Eccentricty, e:	0.7641	in	Plastic Neutral Axis:	0.7641	in

Version 10.0.4

Built-Up Leg Reinforcement Tool

CROWN CASTLE

Site Data	
BU#:	873681
Site Name:	Chicago
Order #:	559909 Rev 2
Section:	10ft - 0ft

Leg Axial Load		
Compression, Pu:	172.48	kips

Reinforcement Type
Split Pipe

Ratings (per TIA-222-H Section 15.5)		
Spacing Req.:	O.K.	
Reinforced Leg:	50.3%	Pass

Connection and Analysis Options		
TIA-222 Revision:	H	
Tower Type:	Self Support	
Consider Leg Load at Time of Modification:		
End Connections:	Fixed	
Leg Crushing Check:	No	
Applied Load:	Axial	
Slenderness Ratio:	KL/r Modified	
Intermediate Connection:	Bolted	
Intermediate Spacing:	18	in
Split Pipe K_i Factor Override:		

Check Limitation	
Apply TIA-222-H Section 15.5:	☑
N/A	☐

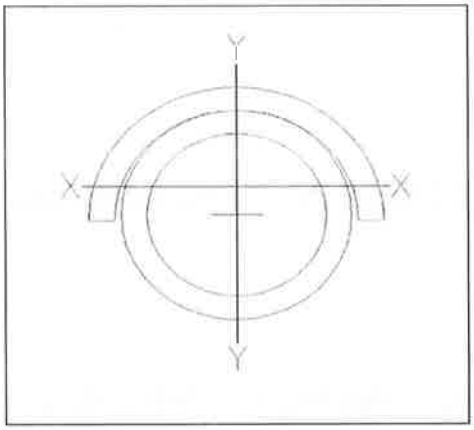

Leg Data		
Diameter:	5.563	in
Thickness:	0.375	in
Yield (Fy):	50	ksi
Unbraced Length:	120.02083	in

Split Pipe Data		
Outside Diameter:	6.625	in
Thickness:	0.432	in
Yield (Fy):	50	ksi

TNX K Factor Adjustment	1.039

Built-Up Section Properties					
Area:	10.3144	in^2	Polar Moment of Inertia, J:	41.3413	in^4
Moment of Intertia, I_{xx}:	33.2915	in^4	Moment of Intertia, I_{yy}:	40.9160	in^4
Eccentricty, e:	0.7641	in	Plastic Neutral Axis:	0.7641	in

Version 10.0.4

Self Support Anchor Rod Capacity

CROWN CASTLE

Site Info	
BU #	873681
Site Name	Chicago
Order #	559909 Rev 2

Analysis Considerations	
TIA-222 Revision	H
Grout Considered:	See Custom Sheet
l_{ar} (in)	See Custom Sheet

Applied Loads		
	Comp.	Uplift
Axial Force (kips)	177.71	147.63
Shear Force (kips)	18.72	15.96

**TIA-222-H Section 15.5 Applied*

Considered Eccentricity	
Leg Mod Eccentricity (in)	0.000
Anchor Rod N.A Shift (in)	0.485
Total Eccentriclty (in)	0.485

**Anchor Rod Eccentricity Applied*

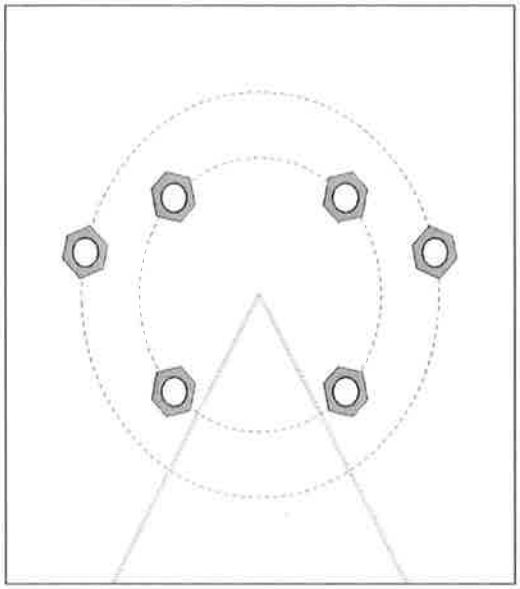

Connection Properties

Anchor Rod Data

GROUP 1: (4) 1" ø bolts (A354-BC N; Fy=109 ksi, Fu=125 ksi) on 9.5" BC
l_{ar} (in): 2

GROUP 2: (2) 1" ø bolts (A193 Gr. B7 N; Fy=105 ksi, Fu=125 ksi) on 14" BC
pos. (deg): 12, 168
l_{ar} (in): 1.5

Analysis Results

Anchor Rod Summary *(units of kips, kip-in)*

GROUP 1:		
Pu_t = 30.31	ϕPn_t = 56.81	**Stress Rating**
Vu = 3.99	ϕVn = 36.82	**50.8%**
Mu = n/a	ϕMn = n/a	Pass
GROUP 2:		
Pu_t = 23.16	ϕPn_t = 56.81	**Stress Rating**
Vu = 0	ϕVn = 36.82	**38.8%**
Mu = 0	ϕMn = 15.75	Pass

CCIplate

Elevation (ft)	0	*(Base)*

note: Bending interaction not considered when Grout Considered = "Yes"

Bolt Group	Resist Axial	Resist Shear		Grout Considered
1	Yes	Yes		Yes
2	Yes	No		No

Leg Mod Eccentricity (in)
0

[✓] Consider Anchor Rod Eccentricity

Custom Bolt Connection

Bolt	Bolt Group ID	Location (deg.)	Diameter (in)	Material	Bolt Circle (in)	Eta Factor, η:	l_e (in):	Thread Type	Area Override, in^2	Tension Only
1	1	45	1	A354-BC	9.5	0.5	2	N-Included		No
2	1	135	1	A354-BC	9.5	0.5	2	N-Included		No
3	1	225	1	A354-BC	9.5	0.5	2	N-Included		No
4	1	315	1	A354-BC	9.5	0.5	2	N-Included		No
5	2	12	1	A193 Gr. B7	14	0.5	1.5	N-Included		No
6	2	168	1	A193 Gr. B7	14	0.5	1.5	N-Included		No

note: For Self-Support towers, only one direction is checked (in+out of the tower) so please use the Plot Graphic button to confirm Anchor Rod placement.

Plot Graphic

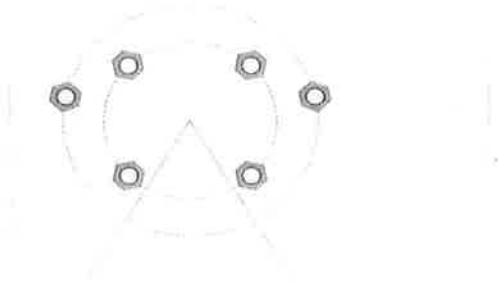

SST Unit Base Foundation

BU # :	873681
Site Name:	Chicago
Order Number:	559909 Rev 2
TIA-222 Revision:	H

Top & Bot. Pad Rein. Different?:	☐
Tower Centroid Offset?:	☑
Block Foundation?:	☑
Rectangular Pad?:	☑

Superstructure Analysis Reactions		
Global Moment, **M**:	2691.34	ft-kips
Global Axial, **P**:	36.46	kips
Global Shear, **V**:	29.82	kips
Leg Compression, P_{comp}:	177.71	kips
Leg Comp. Shear, V_{u_comp}:	18.72	kips
Leg Uplift, P_{uplift}:	147.63	kips
Leg Uplift. Shear, V_{u_uplift}:	15.96	kips
Tower Height, **H**:	172	ft
Base Face Width, **BW**:	18.77	ft
BP Dist. Above Fdn, bp_{dist}:	3	in
Anchor Bolt Circle, **BC**:	9.5	in

Foundation Analysis Checks				
	Capacity	**Demand**	**Rating***	**Check**
Lateral (Sliding) (kips)	283.09	29.82	**10.0%**	**Pass**
Bearing Pressure (ksf)	5.63	3.89	**69.2%**	**Pass**
*Overturning (kip*ft)*	3922.27	3100.90	**79.1%**	**Pass**
*Pad Flexure (kip*ft)*	4041.03	405.27	**9.6%**	**Pass**
Pad Shear - 1-way (kips)	2742.07	0.00	**0.0%**	**Pass**
Pad Shear - Comp 2-way (ksi)	0.164	0.003	**1.9%**	**Pass**
*Flexural 2-way (Comp) (kip*ft)*	1065.79	0.00	**0.0%**	**Pass**
Pad Shear - Tension 2-way (ksi)	0.164	0.003	**1.5%**	**Pass**
*Flexural 2-way (Tension) (kip*ft)*	1065.79	0.00	**0.0%**	**Pass**

**Rating per TIA-222-H Section 15.5*

Structural Rating*:	**9.6%**
Soil Rating*:	**79.1%**

Pad Properties		
Depth, **D**:	11.00	ft
Pad Width, W_1:	17.74	ft
Pad Width, W_2:	21.75	ft
Pad Thickness, **T**:	11.00	ft
Pad Rebar Size (Bottom dir. 1), Sp_1:	6	
Pad Rebar Quantity (Bottom dir. 1), mp_1:	16	
Pad Rebar Size (Bottom dir. 2), Sp_2:	6	
Pad Rebar Quantity (Bottom dir. 2), mp_2:	16	
Pad Clear Cover, cc_{pad}:	3	in

Material Properties		
Rebar Grade, **Fy**:	60	ksi
Concrete Compressive Strength, **F'c**:	3	ksi
Dry Concrete Density, δc:	150	pcf

Soil Properties		
Total Soil Unit Weight, γ:	110	pcf
Ultimate Gross Bearing, Qult:	7.500	ksf
Cohesion, **Cu**:	0.400	ksf
Friction Angle, φ:	0	degrees
SPT Blow Count, N_{blows}:	0	
Base Friction, μ:	0.3	
Neglected Depth, **N**:	4.2	ft
Foundation Bearing on Rock?	No	
Groundwater Depth, **gw**:	25	ft

<-- Toggle between Gross and Net

Version 4.0.3

ATC Hazards by Location

Search Information

Coordinates: 41.858144, -88.071731

Elevation: 745 ft

Timestamp: 2021-08-30T16:37:19.077Z

Hazard Type: Wind

ASCE 7-16

MRI 10-Year	74 mph
MRI 25-Year	80 mph
MRI 50-Year	85 mph
MRI 100-Year	92 mph
Risk Category I	100 mph
Risk Category II	107 mph
Risk Category III	114 mph
Risk Category IV	119 mph

ASCE 7-10

MRI 10-Year	76 mph
MRI 25-Year	84 mph
MRI 50-Year	90 mph
MRI 100-Year	96 mph
Risk Category I	105 mph
Risk Category II	115 mph
Risk Category III-IV	120 mph

ASCE 7-05

ASCE 7-05 Wind Speed	90 mph

The results indicated here DO NOT reflect any state or local amendments to the values or any delineation lines made during the building code adoption process. Users should confirm any output obtained from this tool with the local Authority Having Jurisdiction before proceeding with design.

Disclaimer

Hazard loads are interpolated from data provided in ASCE 7 and rounded up to the nearest whole integer. Per ASCE 7, islands and coastal areas outside the last contour should use the last wind speed contour of the coastal area – in some cases, this website will extrapolate past the last wind speed contour and therefore, provide a wind speed that is slightly higher. NOTE: For queries near wind-borne debris region boundaries, the resulting determination is sensitive to rounding which may affect whether or not it is considered to be within a wind-borne debris region.

Mountainous terrain, gorges, ocean promontories, and special wind regions shall be examined for unusual wind conditions.

While the information presented on this website is believed to be correct, ATC and its sponsors and contributors assume no responsibility or liability for its accuracy. The material presented in the report should not be used or relied upon for any specific application without competent examination and verification of its accuracy, suitability and applicability by engineers or other licensed professionals. ATC does not intend that the use of this information replace the sound judgment of such competent professionals, having experience and knowledge in the field of practice, nor to substitute for the standard of care required of such professionals in interpreting and applying the results of the report provided by this website. Users of the information from this website assume all liability arising from such use. Use of the output of this website does not imply approval by the governing building code bodies responsible for building code approval and interpretation for the

this website does not imply approval by the governing building code bodies responsible for building code approval and interpretation for the building site described by latitude/longitude location in the report.

ASCE 7 Hazards Report

Address:
No Address at This Location

Standard: ASCE/SEI 7-10
Risk Category: II
Soil Class: D - Stiff Soil

Elevation: 749.73 ft (NAVD 88)
Latitude: 41.858144
Longitude: -88.071731

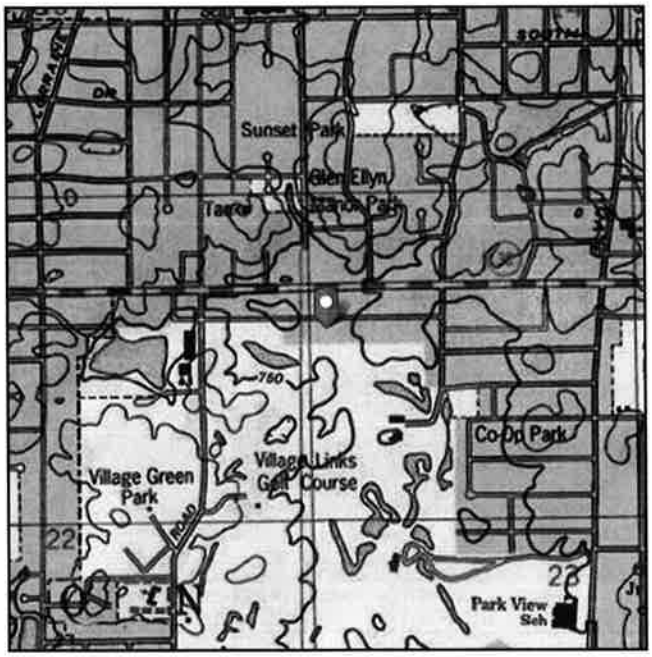

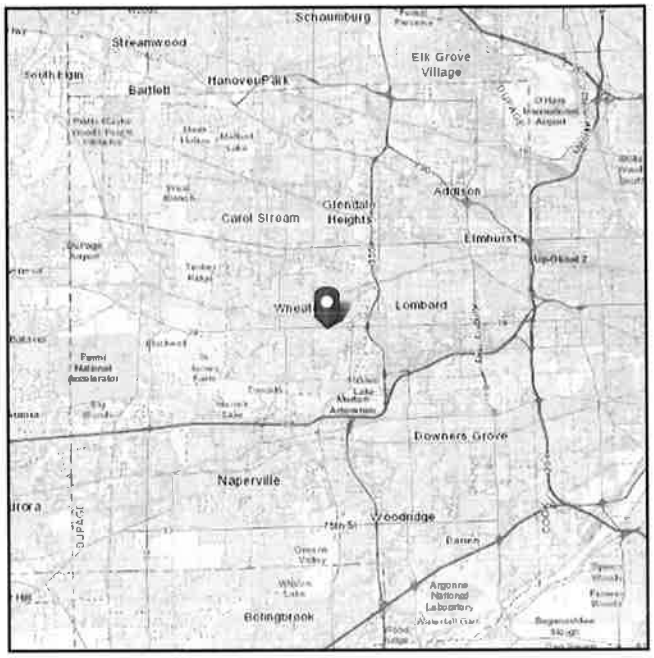

ASCE
AMERICAN SOCIETY OF CIVIL ENGINEERS

Seismic

Site Soil Class: D - Stiff Soil

Results:

S_S :	0.152	S_{DS} :	0.162
S_1 :	0.064	S_{D1} :	0.103
F_a :	1.6	T_L :	12
F_v :	2.4	PGA :	0.08
S_{MS} :	0.243	PGA_M :	0.128
S_{M1} :	0.154	F_{PGA} :	1.6
		I_e :	1

Seismic Design Category B

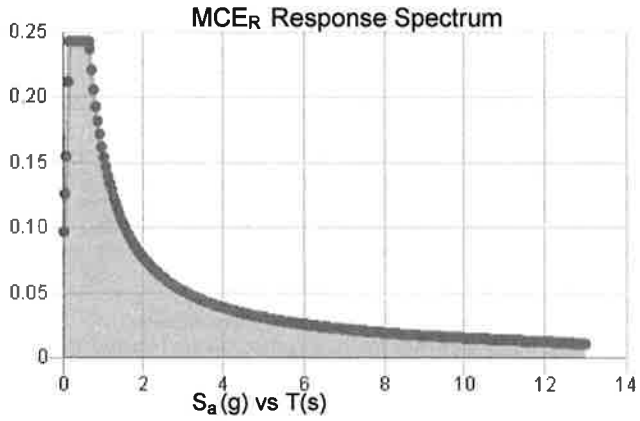

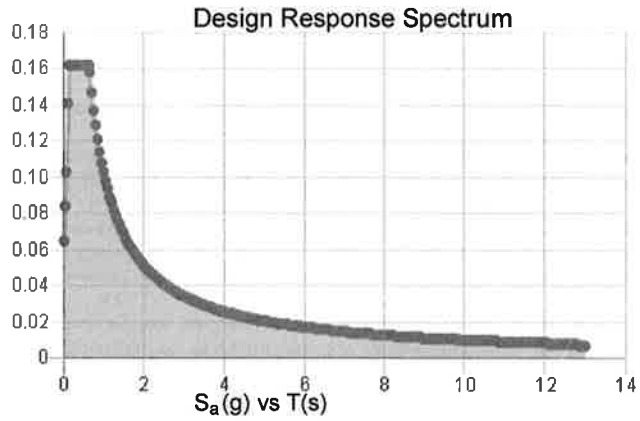

Data Accessed: Sat Jun 26 2021

Date Source: USGS Seismic Design Maps based on ASCE/SEI 7-10, incorporating Supplement 1 and errata of March 31, 2013, and ASCE/SEI 7-10 Table 1.5-2. Additional data for site-specific ground motion procedures in accordance with ASCE/SEI 7-10 Ch. 21 are available from USGS.

AMERICAN SOCIETY OF CIVIL ENGINEERS

Ice

Results:

Ice Thickness:	0.75 in.
Concurrent Temperature:	5 F
Gust Speed:	40 mph
Data Source:	Standard ASCE/SEI 7-10, Figs. 10-2 through 10-8
Date Accessed:	Sat Jun 26 2021

Ice thicknesses on structures in exposed locations at elevations higher than the surrounding terrain and in valleys and gorges may exceed the mapped values.

Values provided are equivalent radial ice thicknesses due to freezing rain with concurrent 3-second gust speeds, for a 50-year mean recurrence interval, and temperatures concurrent with ice thicknesses due to freezing rain. Thicknesses for ice accretions caused by other sources shall be obtained from local meteorological studies. Ice thicknesses in exposed locations at elevations higher than the surrounding terrain and in valleys and gorges may exceed the mapped values.

The ASCE 7 Hazard Tool is provided for your convenience, for informational purposes only, and is provided "as is" and without warranties of any kind. The location data included herein has been obtained from information developed, produced, and maintained by third party providers; or has been extrapolated from maps incorporated in the ASCE 7 standard. While ASCE has made every effort to use data obtained from reliable sources or methodologies, ASCE does not make any representations or warranties as to the accuracy, completeness, reliability, currency, or quality of any data provided herein. Any third-party links provided by this Tool should not be construed as an endorsement, affiliation, relationship, or sponsorship of such third-party content by or from ASCE.

ASCE does not intend, nor should anyone interpret, the results provided by this Tool to replace the sound judgment of a competent professional, having knowledge and experience in the appropriate field(s) of practice, nor to substitute for the standard of care required of such professionals in interpreting and applying the contents of this Tool or the ASCE 7 standard.

In using this Tool, you expressly assume all risks associated with your use. Under no circumstances shall ASCE or its officers, directors, employees, members, affiliates, or agents be liable to you or any other person for any direct, indirect, special, incidental, or consequential damages arising from or related to your use of, or reliance on, the Tool or any information obtained therein. To the fullest extent permitted by law, you agree to release and hold harmless ASCE from any and all liability of any nature arising out of or resulting from any use of data provided by the ASCE 7 Hazard Tool.

dish wireless™

DISH Wireless L.L.C. SITE ID:

CHCHI00216A

DISH Wireless L.L.C. SITE ADDRESS:

415 TAFT AVE
GLEN ELLYN, IL 60137

ILLINOIS - VILLAGE OF GLEN ELLYN CODE OF COMPLIANCE

ALL WORK SHALL BE PERFORMED AND MATERIALS INSTALLED IN ACCORDANCE WITH THE CURRENT EDITIONS OF THE FOLLOWING CODES AS ADOPTED BY THE LOCAL GOVERNING AUTHORITIES. NOTHING IN THESE PLANS IS TO BE CONSTRUED TO PERMIT WORK NOT CONFORMING TO THESE CODES

CODE TYPE	CODE
BUILDING	2009 IBC
MECHANICAL	2009 IMC
ELECTRICAL	2011 NEC

SHEET INDEX

SHEET NO.	SHEET TITLE
T-1	TITLE SHEET
A-1	OVERALL AND ENLARGED SITE PLANS
A-2	ELEVATION, ANTENNA LAYOUT AND SCHEDULE
A-3	EQUIPMENT PLATFORM AND H-FRAME DETAILS
A-4	EQUIPMENT DETAILS
A-5	EQUIPMENT DETAILS
A-6	EQUIPMENT DETAILS
E-1	ELECTRICAL/FIBER ROUTE PLANS AND NOTES
E-2	ELECTRICAL DETAILS
E-3	ELECTRICAL ONE-LINE, FAULT CALCS & PANEL SCHEDULE
G-1	GROUNDING PLANS AND NOTES
G-2	GROUNDING DETAILS
G-3	GROUNDING DETAILS
RF-1	RF CABLE COLOR CODE
GN-1	LEGEND AND ABBREVIATIONS
GN-2	GENERAL NOTES
GN-3	GENERAL NOTES
GN-4	GENERAL NOTES

REQUIRED INFORMATION

1. CONTRACTOR SHALL CONTACT THE "COMMUNITY DEVELOPMENT DEPARTMENT " TO SCHEDULE THE REQUIRED INSPECTIONS WHICH WILL BE LISTED ON THE PERMIT PLACARD. FAILURE TO CALL FOR INSPECTIONS OF WORK MAY RESULT IN THE ISSUANCE OF A CITATION.

2. WITHIN 30 DAYS OF THE NEWLY INSTALLED OR MODIFIED COMMUNICATIONS FACILITY'S FIRST RECEIPT OR TRANSMISSION OF COMMUNICATIONS SIGNALS, AND ON A QUARTERLY BASIS THEREAFTER, THE LICENSE OF THE COMMUNICATIONS FACILITY SHALL SUBMIT TO THE VILLAGE A CERTIFIED WRITTEN REPORT FROM A CONSULTANT APPROVED BY THE VILLAGE OF GLEN ELLYN WHICH INDICATES THAT THE LEVEL OF TOTAL ELECTRONIC TRANSMISSIONS FROM THE COMMUNICATIONS FACILITY DOES NOT EXCEED THE MAXIMUM PERMITTED ELECTRONIC TRANSMISSION EXPOSURE LIMIT FOR GENERAL POPULATION/UNCONTROLLED PERMITTED BY ANY FEDERAL [OR] STATE REGULATORY AGENCY AT THE TIME OF ISSUANCE OF THE PERMIT. PLEASE NOTE THAT THE $2,000.00 DEPOSIT THAT MUST BE SUBMITTED AT TIME OF ISSUANCE OF PERMIT WILL NOT BE RELEASED BACK TO THE PERMIT APPLICANT UNTIL SUCH TIME AS THE INITIAL RADIOFREQUENCY FIELD TESTING REPORT HAS BEEN REVIEWED AND APPROVED BY THE VILLAGE.

SCOPE OF WORK

THIS IS NOT AN ALL INCLUSIVE LIST. CONTRACTOR SHALL UTILIZE SPECIFIED EQUIPMENT PART OR ENGINEER APPROVED EQUIVALENT. CONTRACTOR SHALL VERIFY ALL NEEDED EQUIPMENT TO PROVIDE A FUNCTIONAL SITE. THE PROJECT GENERALLY CONSISTS OF THE FOLLOWING:

TOWER SCOPE OF WORK:
- INSTALL (3) PROPOSED PANEL ANTENNAS (1 PER SECTOR)
- INSTALL (3) PROPOSED ANTENNA MOUNTS (1 PER SECTOR)
- INSTALL PROPOSED JUMPERS
- INSTALL (6) PROPOSED RRUs (2 PER SECTOR)
- INSTALL (1) PROPOSED OVER VOLTAGE PROTECTION DEVICE (OVP)
- INSTALL (1) PROPOSED HYBRID CABLE

GROUND SCOPE OF WORK:
- INSTALL (1) PROPOSED METAL PLATFORM
- INSTALL (1) PROPOSED ICE BRIDGE
- INSTALL (1) PROPOSED PPC CABINET
- INSTALL (1) PROPOSED EQUIPMENT CABINET
- INSTALL (1) PROPOSED POWER CONDUIT
- INSTALL (1) PROPOSED TELCO CONDUIT
- INSTALL (1) PROPOSED TELCO-FIBER BOX
- INSTALL (1) PROPOSED GPS UNIT
- INSTALL (1) PROPOSED SAFETY SWITCH (IF REQUIRED)
- INSTALL (1) PROPOSED FIBER NID (IF REQUIRED)
- EXISTING METER SOCKET ON EXISTING H-FRAME TO BE UTILIZED

SITE PHOTO

UNDERGROUND SERVICE ALERT
UTILITY NOTIFICATION CENTER OF ILLINOIS
(800) 892-0123
WWW.ILLINOIS1CALL.COM

CALL 2 WORKING DAYS UTILITY NOTIFICATION PRIOR TO CONSTRUCTION

811

GENERAL NOTES

THE FACILITY IS UNMANNED AND NOT FOR HUMAN HABITATION. A TECHNICIAN WILL VISIT THE SITE AS REQUIRED FOR ROUTINE MAINTENANCE. THE PROJECT WILL NOT RESULT IN ANY SIGNIFICANT DISTURBANCE OR EFFECT ON DRAINAGE. NO SANITARY SEWER SERVICE, POTABLE WATER, OR TRASH DISPOSAL IS REQUIRED AND NO COMMERCIAL SIGNAGE IS PROPOSED.

11"x17" PLOT WILL BE HALF SCALE UNLESS OTHERWISE NOTED

CONTRACTOR SHALL VERIFY ALL PLANS, EXISTING DIMENSIONS, AND CONDITIONS ON THE JOB SITE, AND SHALL IMMEDIATELY NOTIFY THE ENGINEER IN WRITING OF ANY DISCREPANCIES BEFORE PROCEEDING WITH THE WORK.

SITE INFORMATION

PROPERTY OWNER:	THOMAS L. & J. VAN WINKLE
ADDRESS:	415 TAFT AVE GLEN ELLYN, IL 60137
TOWER TYPE:	SELF SUPPORT TOWER
TOWER CO SITE ID:	873681
TOWER APP NUMBER:	559909
COUNTY:	DUPAGE
LATITUDE (NAD 83):	41° 51' 29.32" N 41.858144 N
LONGITUDE (NAD 83):	88° 4' 18.23" W 88.071731 W
ZONING JURISDICTION:	IL - VILLAGE OF GLEN ELLYN 2014
ZONING DISTRICT:	C4
PARCEL NUMBER:	05-23-102-018
OCCUPANCY GROUP:	U
CONSTRUCTION TYPE:	II-B
POWER COMPANY:	COMED
TELEPHONE COMPANY:	TBD

PROJECT DIRECTORY

APPLICANT:	DISH Wireless L.L.C. 5701 SOUTH SANTA FE DRIVE LITTLETON, CO 80120
TOWER OWNER:	CROWN CASTLE 2000 CORPORATE DRIVE CANONSBURG, PA 15317 (877) 486-9377
SITE DESIGNER:	INFINIGY ENGINEERING, PLLC 2500 W. HIGGINS RD. SUITE 500 HOFFMAN ESTATES, IL 60169 (847) 648-4068
SITE ACQUISITION:	SARAH PARSONS sarah.parsons@crowncastle.com (317)249-2066
CONSTRUCTION MANAGER:	GEORGE DITCHMAN George.Ditchman@dish.com
RF ENGINEER:	KARTHIK MURUGESAN Karthik.Murugesan@dish.com

DIRECTIONS

DIRECTIONS FROM BOLINGBROOK'S CLOW INTERNATIONAL AIRPORT:
DEPART AND HEAD TOWARD S CLOW INTERNATIONAL PKWY,TURN RIGHT ONTO S CLOW INTERNATIONAL PKWY,TURN LEFT ONTO S WEBER RD,ROAD NAME CHANGES TO N WEBER RD,TURN RIGHT ONTO W BOUGHTON RD,ROAD NAME CHANGES TO E BOUGHTON RD,TURN LEFT ONTO ROAD TOWARD WEST SUBURBS / I-355 SOUTH,TAKE THE RAMP ON THE RIGHT FOR I-355 N / VETERANS MEMORIAL TOLLWAY N,TAKE THE RAMP ON THE RIGHT AND FOLLOW SIGNS FOR IL-38,TURN LEFT ONTO IL-38 / ROOSEVELT RD,TURN LEFT ONTO S MAIN ST,TURN RIGHT ONTO TAFT AVE,ARRIVE AT 415 TAFT AVE,GLEN ELLYN, IL 60137

VICINITY MAP

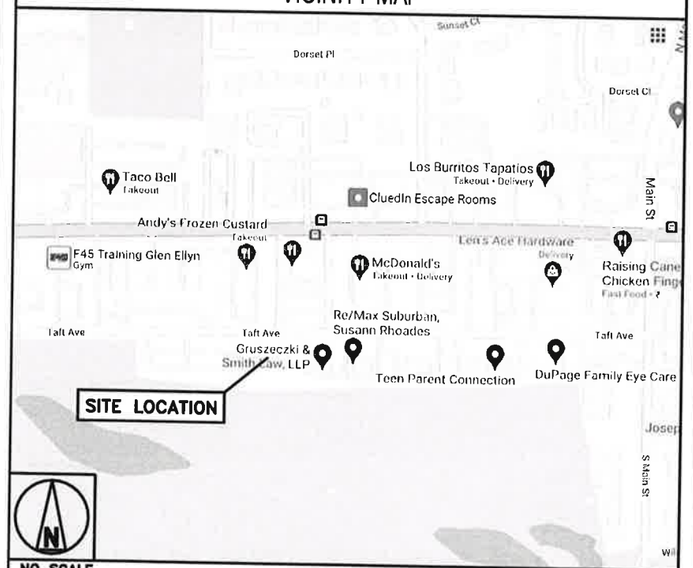

NO SCALE

RECEIVED
FEB 10 2023
VILLAGE OF GLEN ELLYN

CHRISTOPHER J. WASSON
060.059492
LICENSED
PROFESSIONAL
ENGINEER
STATE OF ILLINOIS

INFINIGY ENGINEERING PLLC
LICENSE # 184005973-0002

dish wireless.
5701 SOUTH SANTA FE DRIVE
LITTLETON, CO 80120

CROWN CASTLE
2000 CORPORATE DRIVE
CANONSBURG, PA 15317

INFINIGY
FROM ZERO TO INFINIGY
the solutions are endless
2500 W. HIGGINS RD., SUITE 500 | HOFFMAN ESTATES, IL 60169
PHONE: 847-648-4068 | FAX: 518-690-0793
WWW.INFINIGY.COM

IT IS A VIOLATION OF LAW FOR ANY PERSON, UNLESS THEY ARE ACTING UNDER THE DIRECTION OF A LICENSED PROFESSIONAL ENGINEER, TO ALTER THIS DOCUMENT.

DRAWN BY:	CHECKED BY:	APPROVED BY:
RCD	SS	CJW

RFDS REV #: N/A

CONSTRUCTION DOCUMENTS

SUBMITTALS

REV	DATE	DESCRIPTION
A	07/14/2021	ISSUED FOR REVIEW
0	03/04/2022	ISSUED FOR CONSTRUCTION
1	12/12/2022	ISSUED FOR CONSTRUCTION
2	01/30/2023	ISSUED FOR CONSTRUCTION

A&E PROJECT NUMBER
6039-Z0001-C

DISH Wireless L.L.C.
PROJECT INFORMATION

CHCHI00216A
415 TAFT AVE
GLEN ELLYN, IL 60137

SHEET TITLE
TITLE SHEET

SHEET NUMBER
T-1

NOTES

1. CONTRACTOR SHALL FIELD VERIFY ALL DIMENSIONS.
2. ANTENNAS AND MOUNTS OMITTED FOR CLARITY.

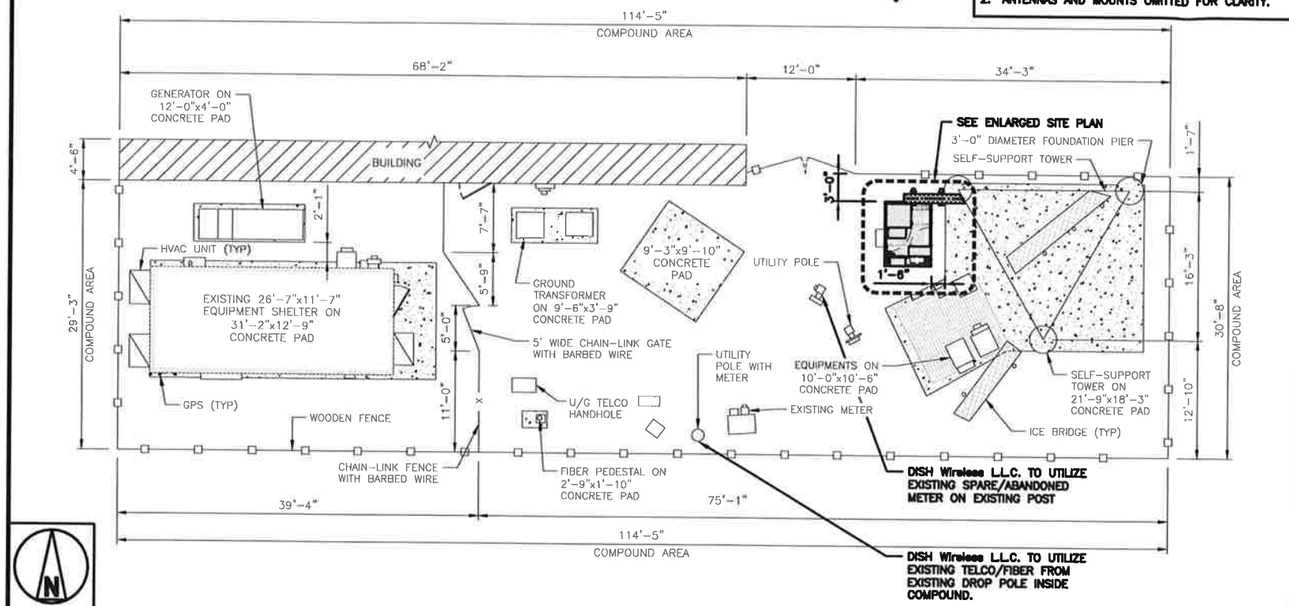

OVERALL SITE PLAN

8' 4' 0 8' 16'
1/8"=1'-0"

1

NOTES

1. CONTRACTOR SHALL FIELD VERIFY ALL DIMENSIONS.
2. CONTRACTOR SHALL MAINTAIN A 10'-0" MINIMUM SEPARATION BETWEEN THE PROPOSED GPS UNIT, TRANSMITTING ANTENNAS AND EXISTING GPS UNITS.
3. ANTENNAS AND MOUNTS OMITTED FOR CLARITY.

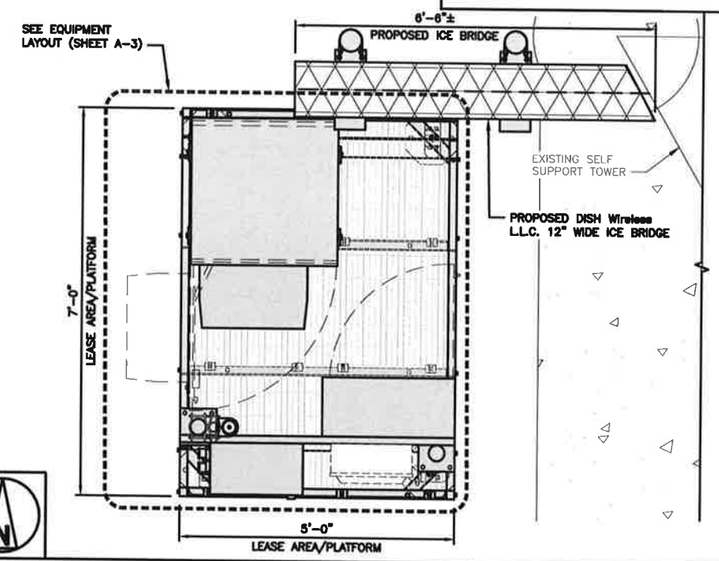

ENLARGED SITE PLAN

12" 6" 0 1' 2' 3'
3/4"=1'-0"

2

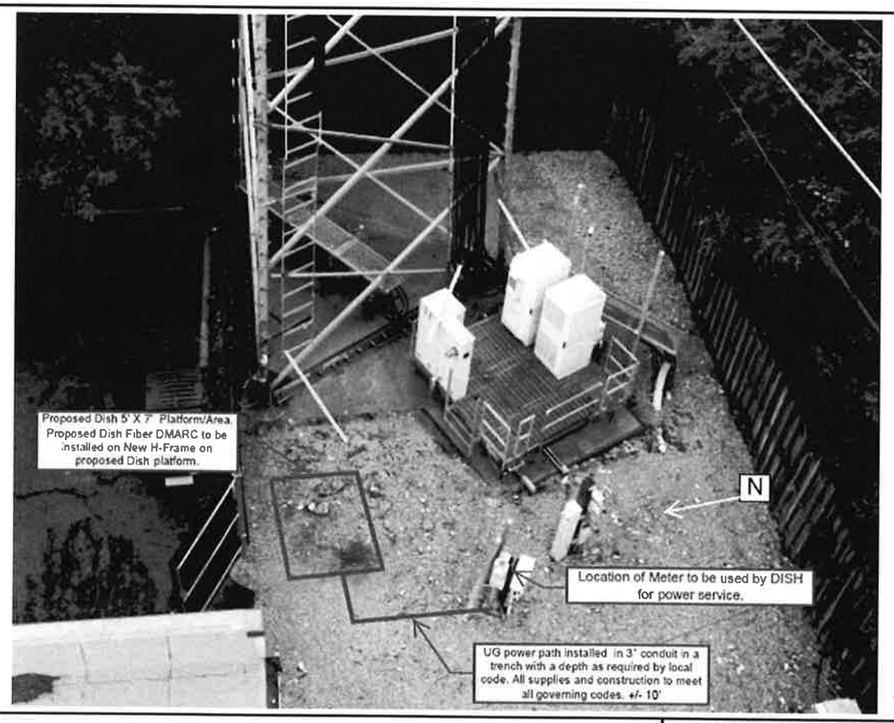

POWER PLAN

NO SCALE

3

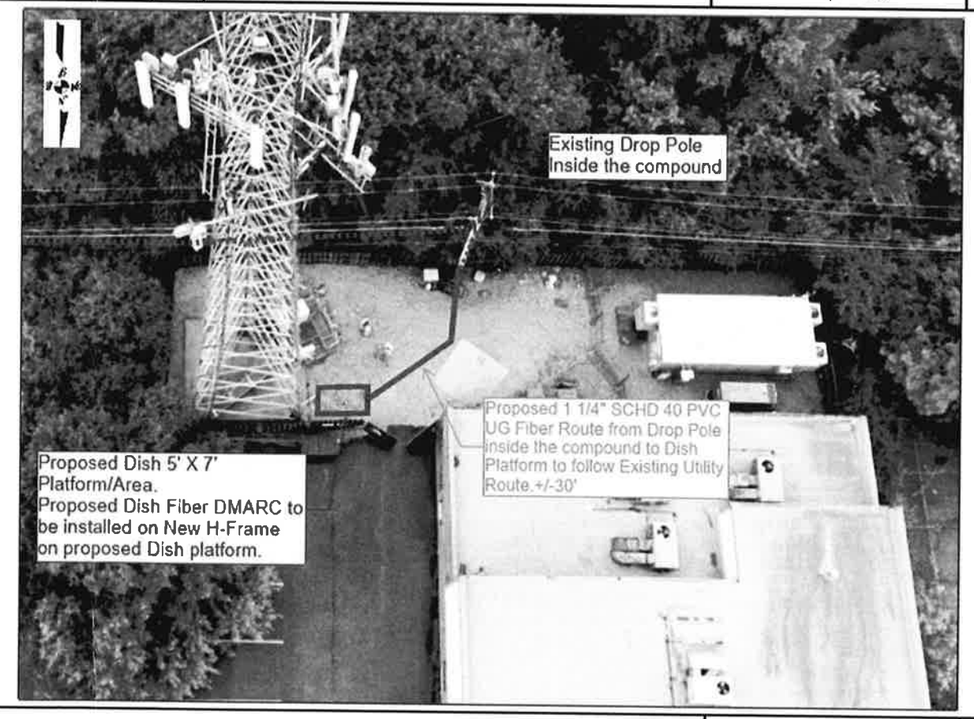

FIBER PLAN

NO SCALE

4

DISH Wireless L.L.C. TEMPLATE VERSION 48 – 2/21/2022

CHRISTOPHER J. WILSON
062.058402
LICENSED PROFESSIONAL ENGINEER
STATE OF ILLINOIS

INFINIGY ENGINEERING PLLC
LICENSE # 184005973-0002

dish wireless.
5701 SOUTH SANTA FE DRIVE
LITTLETON, CO 80120

CROWN CASTLE
2000 CORPORATE DRIVE
CANONSBURG, PA 15317

INFINIGY
FROM ZERO TO INFINIGY
the solutions are endless
2500 W. HIGGINS RD. SUITE 500 | HOFFMAN ESTATES, IL 60169
PHONE: 847-648-4068 | FAX: 918-690-0793
WWW.INFINIGY.COM

IT IS A VIOLATION OF LAW FOR ANY PERSON, UNLESS THEY ARE ACTING UNDER THE DIRECTION OF A LICENSED PROFESSIONAL ENGINEER, TO ALTER THIS DOCUMENT.

DRAWN BY:	CHECKED BY:	APPROVED BY:
RCD	SS	CJW

RFDS REV #: N/A

CONSTRUCTION DOCUMENTS

SUBMITTALS

REV	DATE	DESCRIPTION
A	07/14/2021	ISSUED FOR REVIEW
0	03/04/2022	ISSUED FOR CONSTRUCTION
1	12/12/2022	ISSUED FOR CONSTRUCTION
2	01/30/2023	ISSUED FOR CONSTRUCTION

A&E PROJECT NUMBER
6039-Z0001-C

DISH Wireless L.L.C.
PROJECT INFORMATION

CHCHI00216A
415 TAFT AVE
GLEN ELLYN, IL 60137

SHEET TITLE
OVERALL AND ENLARGED SITE PLANS

SHEET NUMBER
A-1

NOTES

1. CONTRACTOR SHALL FIELD VERIFY ALL DIMENSIONS.
2. ANTENNA AND MW DISH SPECIFICATIONS REFER TO ANTENNA SCHEDULE AND TO FINAL CONSTRUCTION RFDS FOR ALL RF DETAILS
3. EXISTING EQUIPMENT AND FENCE OMITTED FOR CLARITY.
4. INFINIGY HAS NOT EVALUATED THE TOWER OR MOUNT STRUCTURE AND ASSUMES NO RESPONSIBILITY FOR THEIR STRUCTURAL INTEGRITY REGARDING PROPOSED LOADINGS. FINAL INSTALLATION SHALL COMPLY WITH RESULTS OF PASSING STRUCTURAL ANALYSES PERFORMED BY OTHERS.

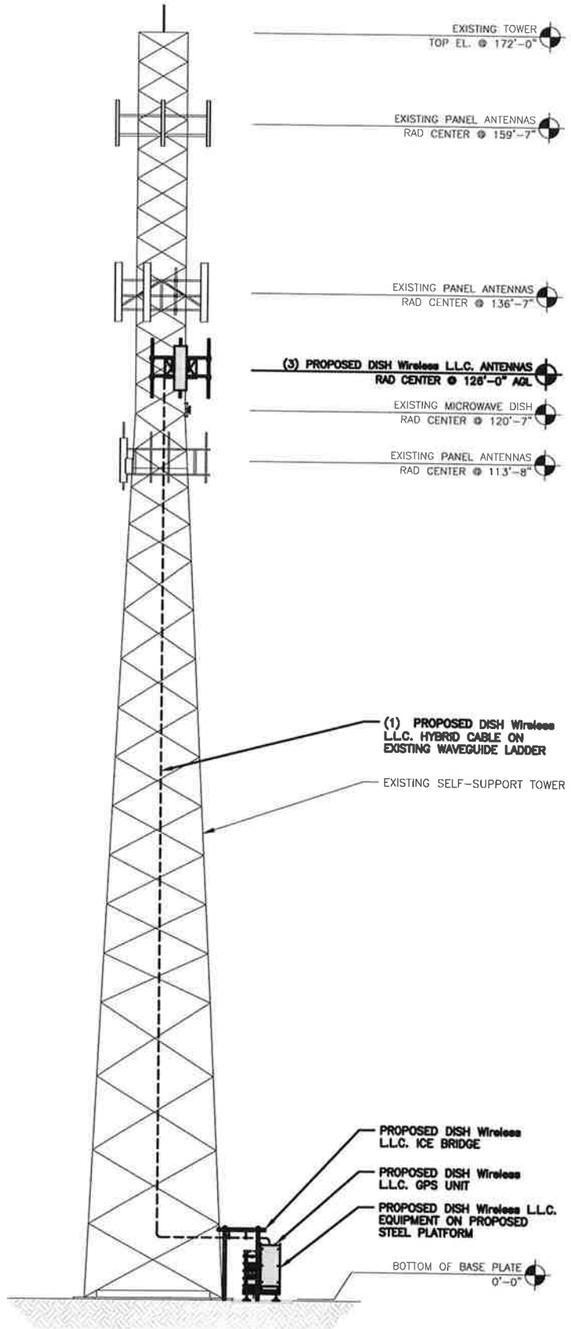

PROPOSED NORTH ELEVATION

10' 0 10' 20'
1"=10'

1

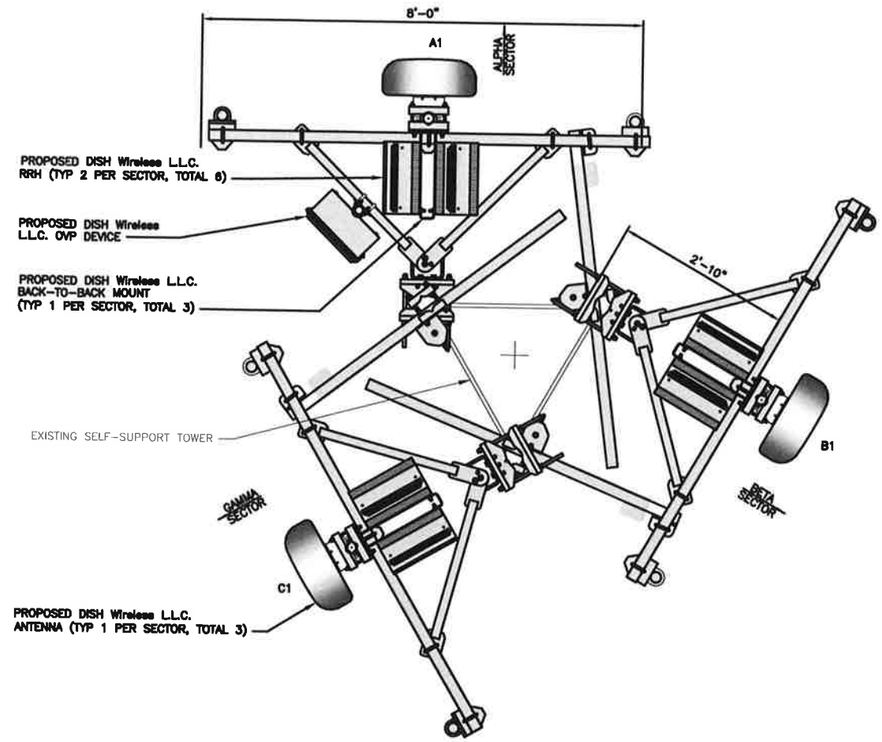

ANTENNA LAYOUT

12" 6" 0 1' 2' 3'
3/4"=1'-0"

2

SECTOR POS.	ANTENNA					TRANSMISSION CABLE	RRH			OVP
	EXISTING OR PROPOSED	MANUFACTURER – MODEL NUMBER	TECH	AZIMUTH	RAD CENTER	FEED LINE TYPE AND LENGTH	MANUFACTURER – MODEL NUMBER	TECH	POS.	MANUFACTURER MODEL
A1	---	---	---	---	---	(1) HIGH-CAPACITY HYBRID CABLE (174' LONG)	FUJITSU – TA08025-B604	5G	A2	RAYCAP RDIDC-9181-PF-48
A2	PROPOSED	UMAWIRELESS – MX08FRO665-21	5G	0'	126'-0"		FUJITSU – TA08025-B605	5G	A2	
A3	---	---	---	---	---		---	---	---	
B1	---	---	---	---	---	SHARED W/ALPHA	FUJITSU – TA08025-B604	5G	B2	SHARED W/ALPHA
B2	PROPOSED	UMAWIRELESS – MX08FRO665-21	5G	120'	126'-0"		FUJITSU – TA08025-B605	5G	B2	
B3	---	---	---	---	---		---	---	---	
C1	---	---	---	---	---	SHARED W/ALPHA	FUJITSU – TA08025-B604	5G	C2	SHARED W/ALPHA
C2	PROPOSED	UMAWIRELESS – MX08FRO665-21	5G	240'	126'-0"		FUJITSU – TA08025-B605	5G	C2	
C3	---	---	---	---	---		---	---	---	

NOTES

1. CONTRACTOR TO REFER TO FINAL CONSTRUCTION RFDS FOR ALL RF DETAILS.
2. ANTENNA AND RRH MODELS MAY CHANGE DUE TO EQUIPMENT AVAILABILITY. ALL EQUIPMENT CHANGES MUST BE APPROVED AND REMAIN IN COMPLIANCE WITH THE PROPOSED DESIGN AND STRUCTURAL ANALYSES.

ANTENNA SCHEDULE

NO SCALE

3

INFINIGY ENGINEERING PLLC
LICENSE # 184005973-0002

dish wireless.
5701 SOUTH SANTA FE DRIVE
LITTLETON, CO 80120

CROWN CASTLE
2000 CORPORATE DRIVE
CANONSBURG, PA 15317

INFINIGY
FROM ZERO TO INFINIGY
the solutions are endless
2500 W. HIGGINS RD. SUITE 500 | HOFFMAN ESTATES, IL 60169
PHONE: 847-648-4068 | FAX: 318-690-0793
WWW.INFINIGY.COM

IT IS A VIOLATION OF LAW FOR ANY PERSON, UNLESS THEY ARE ACTING UNDER THE DIRECTION OF A LICENSED PROFESSIONAL ENGINEER, TO ALTER THIS DOCUMENT.

DRAWN BY:	CHECKED BY:	APPROVED BY:
RCD	SS	CJW

RFDS REV #: N/A

CONSTRUCTION DOCUMENTS

SUBMITTALS

REV	DATE	DESCRIPTION
A	07/14/2021	ISSUED FOR REVIEW
0	03/04/2022	ISSUED FOR CONSTRUCTION
1	12/12/2022	ISSUED FOR CONSTRUCTION
2	01/30/2023	ISSUED FOR CONSTRUCTION

A&E PROJECT NUMBER
6039-Z0001-C

DISH Wireless L.L.C.
PROJECT INFORMATION

CHCHI00216A
415 TAFT AVE
GLEN ELLYN, IL 60137

SHEET TITLE
ELEVATION, ANTENNA LAYOUT AND SCHEDULE

SHEET NUMBER
A-2

DISH Wireless L.L.C. TEMPLATE VERSION 48 – 2/21/2022

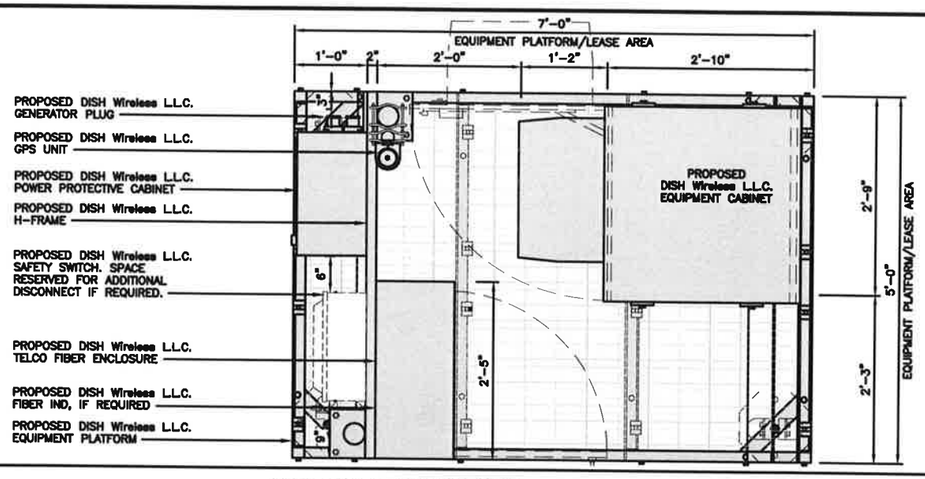

PLATFORM EQUIPMENT PLAN

12" 9" 6" 3" 0 1' 2'
1"=1'-0"

1

COMMSCOPE MTC4045LP 5X7 PLATFORM	
DIMENSIONS (HxWxD)	18"x84"x60"
TOTAL WEIGHT	423 LBS

NOTE:
GC TO PROVIDE EXTENDED THREAD FOR PLATFORM IF REQUIRED HEIGHT EXCEEDS 17"

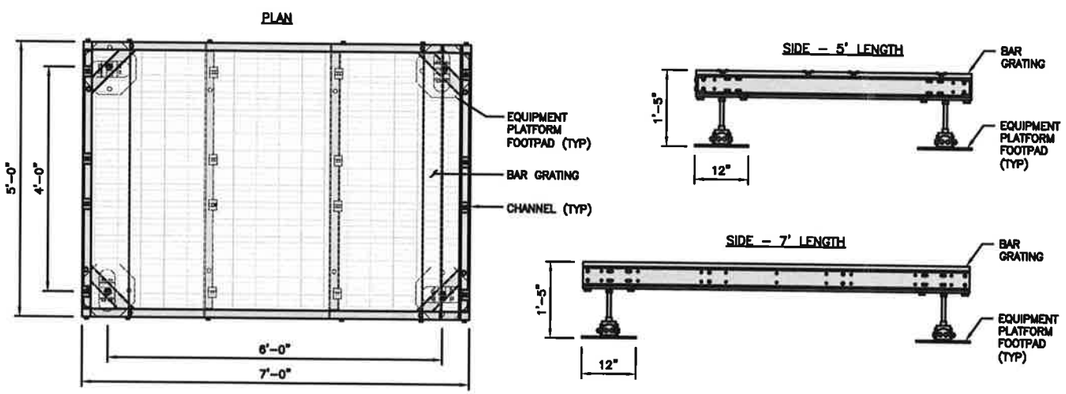

PLATFORM DETAIL

NO SCALE

2

COMMSCOPE MTC4045HFLD H-FRAME	
UNISTRUT/SUPPORT RAILS QTY	5
WEIGHT	59.74 lbs

NOTE:
OR DISH Wireless L.L.C. APPROVED EQUIVALENT

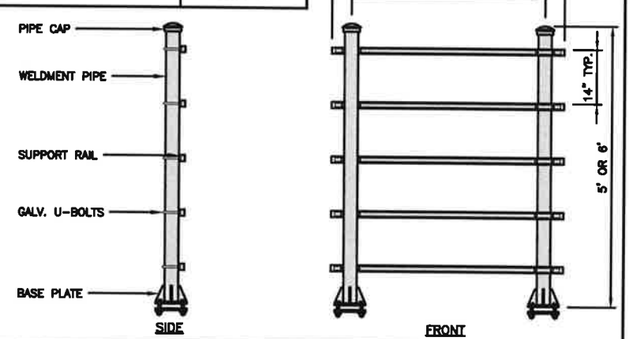

H-FRAME DETAIL

NO SCALE

3

NOT USED

NO SCALE

4

NOTES

1. CONTRACTOR TO BURY PLATFORM FEET WITH A MINIMUM OF 2" OF FILL PER EXISTING SITE SURFACE
2. WEED BARRIER FABRIC TO BE ADDED AT DISCRETION OF DISH Wireless L.L.C. CONSTRUCTION MANAGER AT TIME OF CONSTRUCTION. ONE SHEET 8'x8' INSTALLED UNDER ALL FOUR FEET OF THE PLATFORM (4 MIL BLACK PLASTIC)
3. EQUIPMENT CABINET OMITTED FOR CLARITY

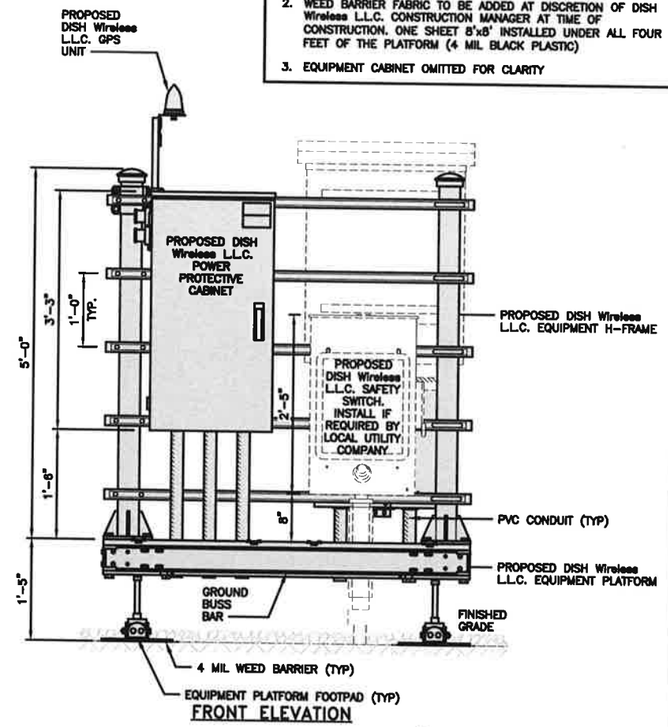

FRONT ELEVATION

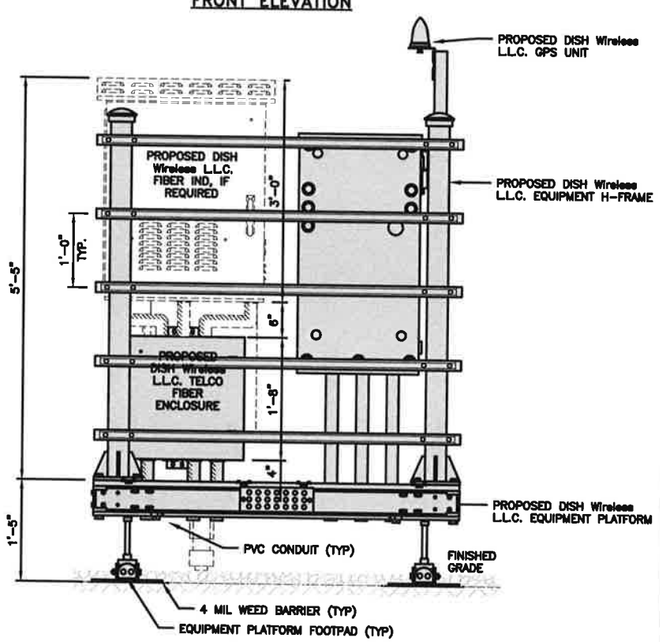

BACK ELEVATION

H-FRAME EQUIPMENT ELEVATION

12" 9" 6" 3" 0 1' 2'
1"=1'-0"

5

DISH Wireless L.L.C. TEMPLATE VERSION 48 – 2/21/2022

CHRISTOPHER J. SCHWEGMAN
062-058468
LICENSED PROFESSIONAL ENGINEER
STATE OF ILLINOIS

INFINIGY ENGINEERING PLLC
LICENSE # 184005973-0002

dish wireless.
5701 SOUTH SANTA FE DRIVE
LITTLETON, CO 80120

CROWN CASTLE
2000 CORPORATE DRIVE
CANONSBURG, PA 15317

INFINIGY
FROM ZERO TO INFINIGY
the solutions are endless
2500 W. HIGGINS RD. SUITE 500 | HOFFMAN ESTATES, IL 60169
PHONE: 847-648-4068 | FAX: 518-690-0793
WWW.INFINIGY.COM

IT IS A VIOLATION OF LAW FOR ANY PERSON, UNLESS THEY ARE ACTING UNDER THE DIRECTION OF A LICENSED PROFESSIONAL ENGINEER, TO ALTER THIS DOCUMENT.

DRAWN BY:	CHECKED BY:	APPROVED BY:
RCD	SS	CJW

RFDS REV #: N/A

CONSTRUCTION DOCUMENTS

SUBMITTALS

REV	DATE	DESCRIPTION
A	07/14/2021	ISSUED FOR REVIEW
0	03/04/2022	ISSUED FOR CONSTRUCTION
1	12/12/2022	ISSUED FOR CONSTRUCTION
2	01/30/2023	ISSUED FOR CONSTRUCTION

A&E PROJECT NUMBER
6039-Z0001-C

DISH Wireless L.L.C. PROJECT INFORMATION
CHCHI00216A
415 TAFT AVE
GLEN ELLYN, IL 60137

SHEET TITLE
EQUIPMENT PLATFORM AND H-FRAME DETAILS

SHEET NUMBER
A-3

ENERSYS HEX CABINET 2000005996	
DIMENSIONS (HxWxD):	73"x30"x32"
WEIGHT EMPTY:	376 lbs
HEATER	800W
POWER SYSTEM	-48V ALPHA/600A

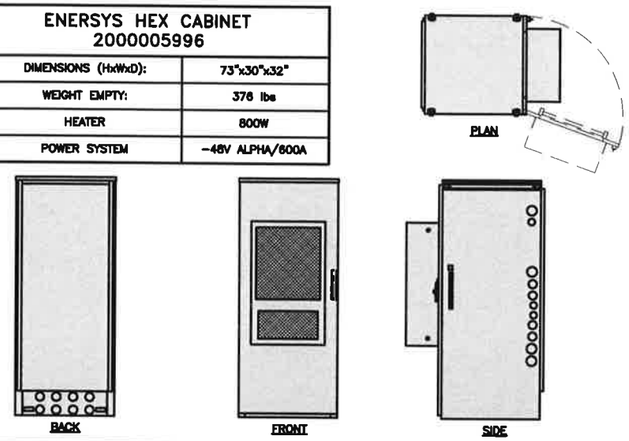

CABINET DETAIL — NO SCALE — 1

RAYCAP PPC RDIAC-2465-P-240-MTS	
ENCLOSURE DIMENSIONS (HxWxD):	39"x22.855"x12.593
WEIGHT:	80 lbs
OPERATING AC VOLTAGE	240/120 1 PHASE 3W+G

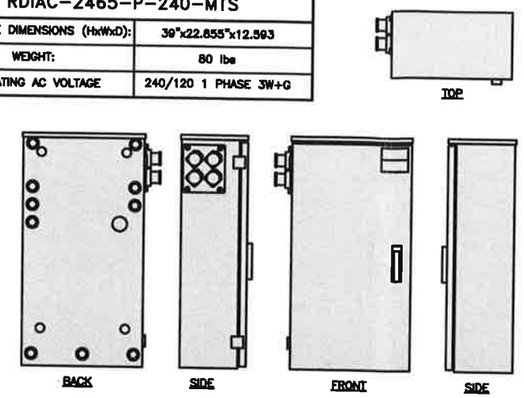

POWER PROTECTION CABINET (PPC) DETAIL — NO SCALE — 2

SQUARE D SAFETY SWITCHES D224NRB	
ENCLOSURE DIM (HxWxD)	29.25"x19.00"x8.50"
ENCLOSURE TYPE	NEMA 3R RAINPROOF
UL LISTED	FILE E-2875

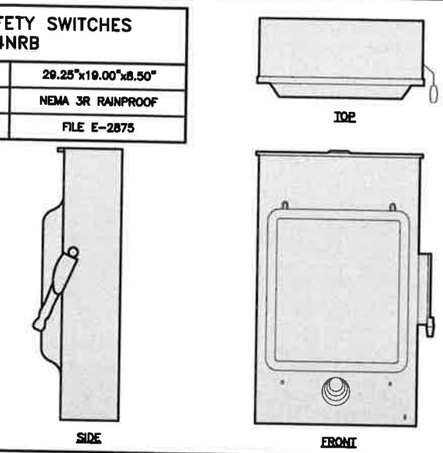

SAFETY SWITCH DETAIL — NO SCALE — 3

NOT USED — NO SCALE — 4

ZAYO 5RU (LEFT SWING DOOR) FIBER NID ENCLOSURE	
DIMENSIONS (HxWxD)	36.1"x29"x12.9"
WEIGHT	85 lbs

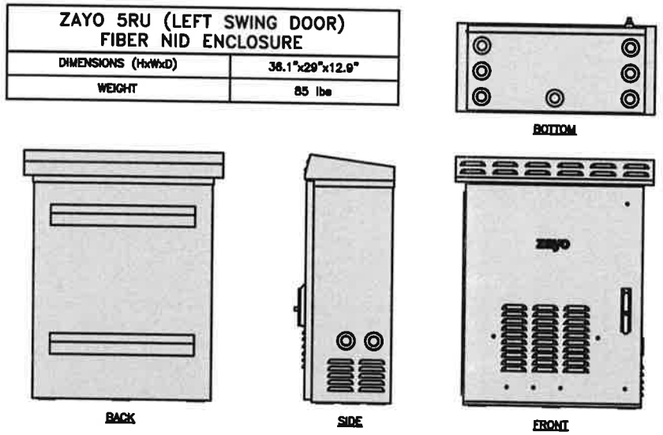

FIBER NID ENCLOSURE DETAIL — NO SCALE — 5

CHARLES CFIT-PF2020DSH1 FIBER TELCO ENCLOSURE	
ENCLOSURE DIMS (HxWxD)	20"x20"x9"
ENCLOSURE WEIGHT	20 lbs
MOUNTING	WALL
COMPLIANCE	TYPE 4

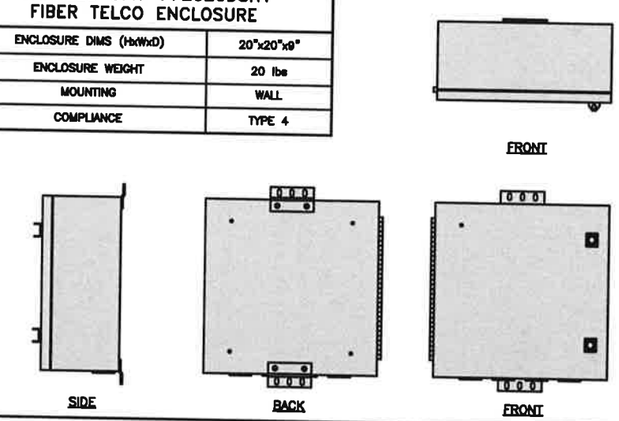

FIBER TELCO ENCLOSURE DETAIL — NO SCALE — 6

COMMSCOPE WB-K110-B WAVEGUIDE BRIDGE KIT	
DIMENSIONS (HxL)	160"x10'
WEIGHT/ VOLUME	325.0 LBS
CABLE RUN (QTY)	12

INCLUDED PRODUCTS:	
	WB-T12-3 TRAPEZE KIT, 3 RUNGS
	WB-LB12-3 SUPPORT BRACKET
	MF-130 DIRECT BURIAL PIPE COLUMN, 13'-4"

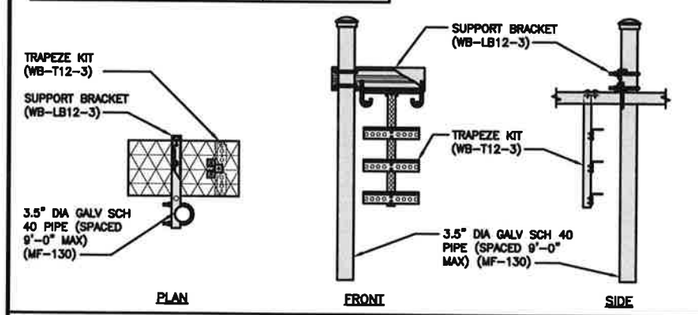

ICE BRIDGE DETAIL — NO SCALE — 7

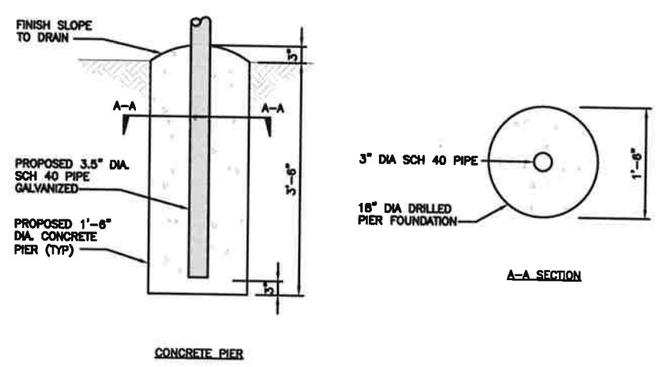

TYPICAL ICE BRIDGE CONCRETE PIER DETAIL — NO SCALE — 8

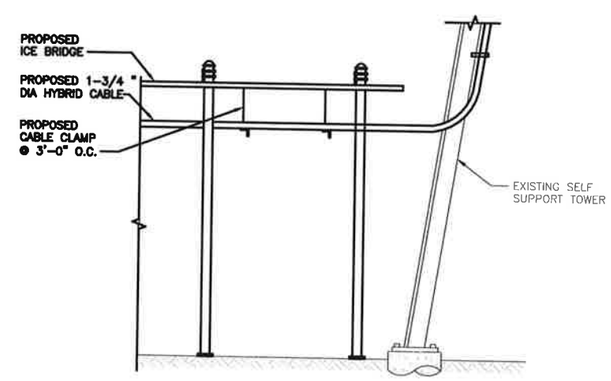

HYBRID CABLE RUN — NO SCALE — 9

DISH Wireless L.L.C. TEMPLATE VERSION 48 – 2/21/2022

INFINIGY ENGINEERING PLLC
LICENSE # 184005973-0002

dish wireless.
5701 SOUTH SANTA FE DRIVE
LITTLETON, CO 80120

CROWN CASTLE
2000 CORPORATE DRIVE
CANONSBURG, PA 15317

INFINIGY
FROM ZERO TO INFINIGY
the solutions are endless
2300 W. HIGGINS RD., SUITE 500 | HOFFMAN ESTATES, IL 60169
PHONE: 847-648-4068 | FAX: 318-690-0793
WWW.INFINIGY.COM

IT IS A VIOLATION OF LAW FOR ANY PERSON, UNLESS THEY ARE ACTING UNDER THE DIRECTION OF A LICENSED PROFESSIONAL ENGINEER, TO ALTER THIS DOCUMENT.

DRAWN BY:	CHECKED BY:	APPROVED BY:
RCD	SS	CJW

RFDS REV #: N/A

CONSTRUCTION DOCUMENTS

SUBMITTALS

REV	DATE	DESCRIPTION
A	07/14/2021	ISSUED FOR REVIEW
0	03/04/2022	ISSUED FOR CONSTRUCTION
1	12/12/2022	ISSUED FOR CONSTRUCTION
2	01/30/2023	ISSUED FOR CONSTRUCTION

A&E PROJECT NUMBER
6039-Z0001-C

DISH Wireless L.L.C.
PROJECT INFORMATION

CHCHI00216A
415 TAFT AVE
GLEN ELLYN, IL 60137

SHEET TITLE
EQUIPMENT DETAILS

SHEET NUMBER
A-4

PCTEL GPSGL-TMG-SPI-40NCB	
DIMENSIONS (DIAxH) MM/INCH	81x184mm 3.2"x7.25"
WEIGHT W/ACCESSORIES	075 lbs
CONNECTOR	N-FEMALE
FREQUENCY RANGE	1590 ± 30MHz

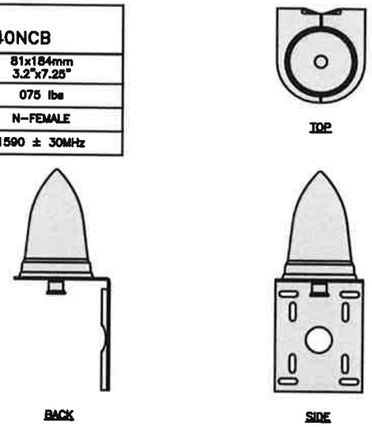

GPS DETAIL | NO SCALE | 1

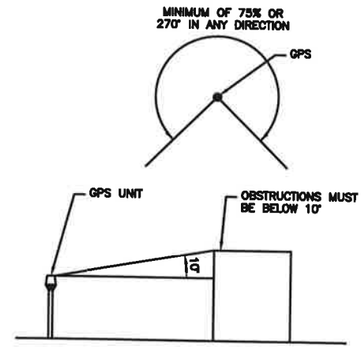

GPS MINIMUM SKY VIEW REQUIREMENTS | NO SCALE | 2

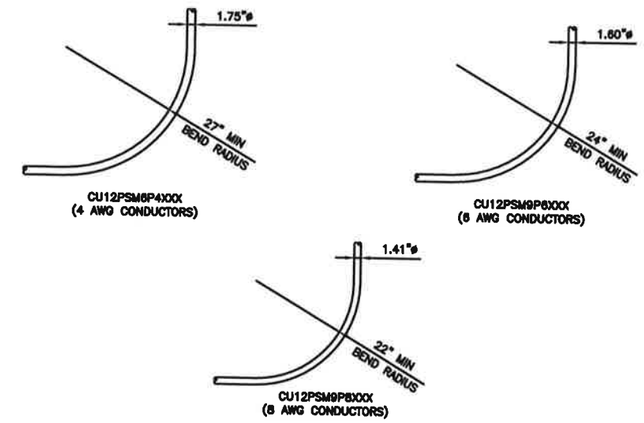

CABLES UNLIMITED HYBRID CABLE MINIMUM BEND RADIUSES | NO SCALE | 3

NOT USED | NO SCALE | 4

NOT USED | NO SCALE | 5

NOT USED | NO SCALE | 6

NOT USED | NO SCALE | 7

NOT USED | NO SCALE | 8

NOT USED | NO SCALE | 9

DISH Wireless L.L.C. TEMPLATE VERSION 48 – 2/21/2022

CHRISTOPHER J. SCHUSTER
062-059492
LICENSED
PROFESSIONAL
ENGINEER
STATE OF ILLINOIS

INFINIGY ENGINEERING PLLC
LICENSE # 184005973-0002

dish wireless.
5701 SOUTH SANTA FE DRIVE
LITTLETON, CO 80120

CROWN CASTLE
2000 CORPORATE DRIVE
CANONSBURG, PA 15317

INFINIGY
FROM ZERO TO INFINIGY
the solutions are endless
2500 W. HIGGINS RD. SUITE 500 |
HOFFMAN ESTATES, IL 60169
PHONE: 847-648-4068 | FAX: 518-690-0793
WWW.INFINIGY.COM

IT IS A VIOLATION OF LAW FOR ANY PERSON, UNLESS THEY ARE ACTING UNDER THE DIRECTION OF A LICENSED PROFESSIONAL ENGINEER, TO ALTER THIS DOCUMENT.

DRAWN BY:	CHECKED BY:	APPROVED BY:
RCD	SS	CJW

RFDS REV #: N/A

CONSTRUCTION DOCUMENTS

SUBMITTALS

REV	DATE	DESCRIPTION
A	07/14/2021	ISSUED FOR REVIEW
0	03/04/2022	ISSUED FOR CONSTRUCTION
1	12/12/2022	ISSUED FOR CONSTRUCTION
2	01/30/2023	ISSUED FOR CONSTRUCTION

A&E PROJECT NUMBER
6039-Z0001-C

DISH Wireless L.L.C.
PROJECT INFORMATION

CHCHI00216A
415 TAFT AVE
GLEN ELLYN, IL 60137

SHEET TITLE
EQUIPMENT DETAILS

SHEET NUMBER
A-5

FUJITSU TRIPLE BAND TA08025-B605	
DIMENSIONS (HxWxD)	14.9"x15.7"x9"
WEIGHT	74.95 lbs
CONNECTOR TYPE	4.3-10 RF CONNECTOR
POWER SUPPLY	DC -58~-36V

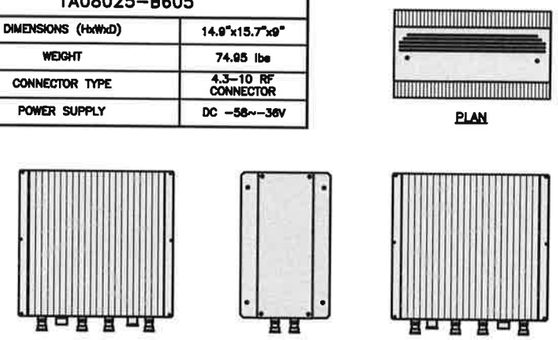

RRH DETAIL — NO SCALE — 1

FUJITSU DUAL BAND TA08025-B604	
DIMENSIONS (HxWxD)	14.9"x15.7"x7.8"
WEIGHT	63.9 lbs
CONNECTOR TYPE	4.3-10 RF CONNECTOR
POWER SUPPLY	DC -58~-36V

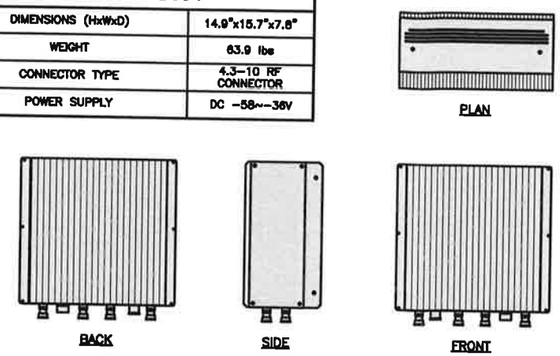

RRH DETAIL — NO SCALE — 2

SABRE DOUBLE Z-BRACKET C10123155	
DIMENSIONS (HxWxD) (1 BRACKET)	5"x20"x1-13/16"
WEIGHT (FULL ASSEMBLY)	35.79 lbs
PACKAGE QUANTITY	4

#	DESCRIPTION
1	PLATE, CHANNEL BRACKET
2	RRH Z BRACKET, 3/16"
3	THREADED ROD ASSEMBLY 1/2"x12"

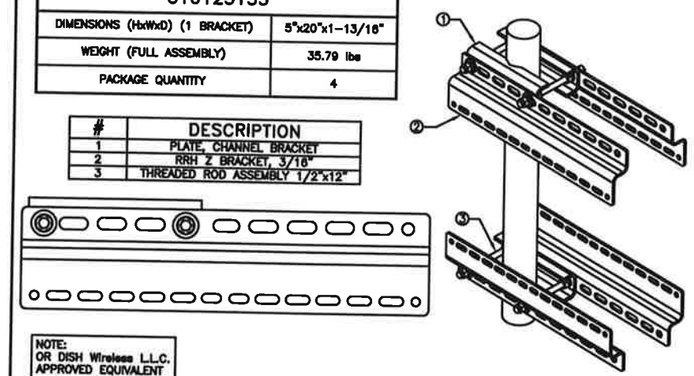

NOTE:
OR DISH Wireless L.L.C.
APPROVED EQUIVALENT

RRH MOUNT DETAIL — NO SCALE — 3

RAYCAP RDIDC-9181-PF-48 DC SURGE PROTECTION (OVP)	
DIMENSIONS (HxWxD)	18.98"x14.39"x8.15"
WEIGHT	21.82 LBS

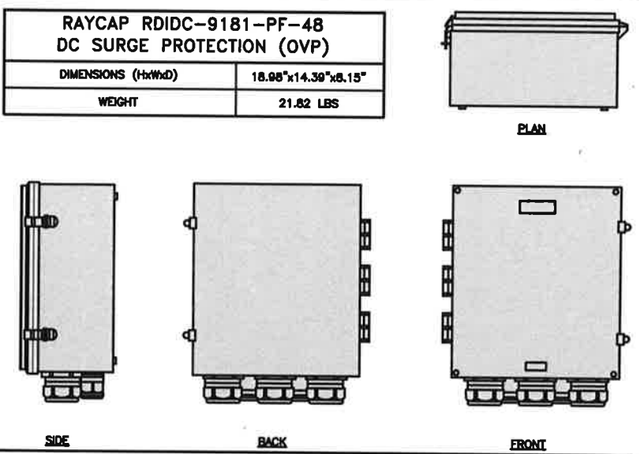

SURGE SUPPRESSION DETAIL (OVP) — NO SCALE — 4

JMA WIRELESS MX08FRO665-21 ANTENNA	
DIMENSIONS (HxWxD)	72.8"x20.0"x8.0"
TOTAL WEIGHT	64.5 LB
RF PORTS, CONNECTOR TYPE	8 x 4.3-10 FEMALE

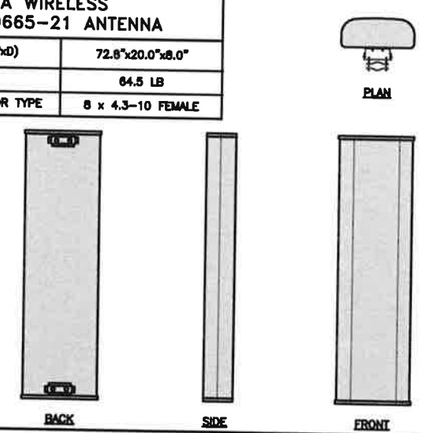

ANTENNA DETAIL — NO SCALE — 5

M04 MOUNTING BRACKET HPA-33R-BUU-H4-K	
WIDTH	5"
DEPTH	2"
HEIGHT	8"
TOTAL WEIGHT	1.5 lbs
HOUSING MATERIAL	ASA/ABS/ALUMINUM
RADOME COLOR	LIGHT GRAY
CONNECTOR	1x8-PIN DAISY CHAIN

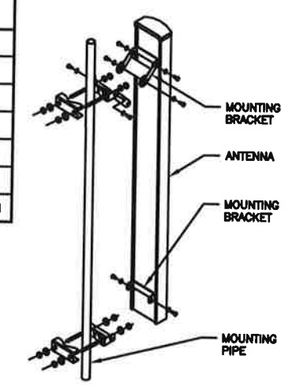

NOTE:
OR DISH Wireless L.L.C.
APPROVED EQUIVALENT

ANTENNA MOUNTING DETAIL — NO SCALE — 6

COMMSCOPE V-FRAME MTC3975083	
FACE SIZE	6'-0"
WEIGHT	352.136 lbs

NOTE:
OR DISH Wireless L.L.C.
APPROVED EQUIVALENT

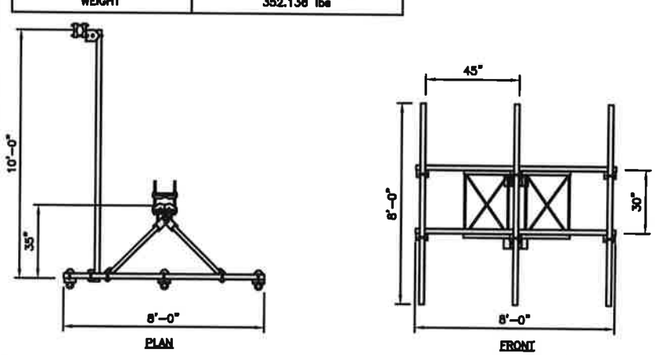

ANTENNA FRAME DETAIL — NO SCALE — 7

SITEPRO1 T600 UNIVERSAL T-BRACKET	
DIMENSIONS (HxWxL)	2.25"x10.0"x15.25"
WEIGHT/ VOLUME	5.60 LBS

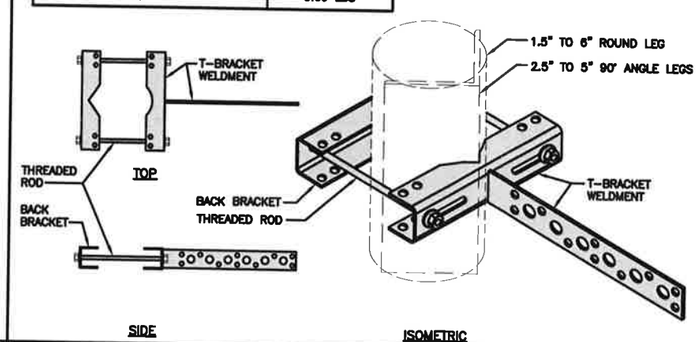

VERTICAL CABLE SUPPORT DETAIL — NO SCALE — 8

NOT USED — NO SCALE — 9

DISH Wireless L.L.C. TEMPLATE VERSION 48 – 2/21/2022

INFINIGY ENGINEERING PLLC
LICENSE # 184005973-0002

dish wireless.
5701 SOUTH SANTA FE DRIVE
LITTLETON, CO 80120

CROWN CASTLE
2000 CORPORATE DRIVE
CANONSBURG, PA 15317

INFINIGY
FROM ZERO TO INFINIGY
the solutions are endless
2500 W. HIGGINS RD. SUITE 500 | HOFFMAN ESTATES, IL 60169
PHONE: 847-648-4068 | FAX: 518-690-0793
WWW.INFINIGY.COM

IT IS A VIOLATION OF LAW FOR ANY PERSON, UNLESS THEY ARE ACTING UNDER THE DIRECTION OF A LICENSED PROFESSIONAL ENGINEER, TO ALTER THIS DOCUMENT.

DRAWN BY:	CHECKED BY:	APPROVED BY:
RCD	SS	CJW

RFDS REV #: N/A

CONSTRUCTION DOCUMENTS

SUBMITTALS

REV	DATE	DESCRIPTION
A	07/14/2021	ISSUED FOR REVIEW
0	03/04/2022	ISSUED FOR CONSTRUCTION
1	12/12/2022	ISSUED FOR CONSTRUCTION
2	01/30/2023	ISSUED FOR CONSTRUCTION

A&E PROJECT NUMBER
6039-Z0001-C

DISH Wireless L.L.C.
PROJECT INFORMATION

CHCHI00216A
415 TAFT AVE
GLEN ELLYN, IL 60137

SHEET TITLE
EQUIPMENT DETAILS

SHEET NUMBER
A-6

NOTES

1. CONTRACTOR SHALL FIELD VERIFY ALL PROPOSED UNDERGROUND UTILITY CONDUIT ROUTE.
2. ANTENNAS AND MOUNTS OMITTED FOR CLARITY.

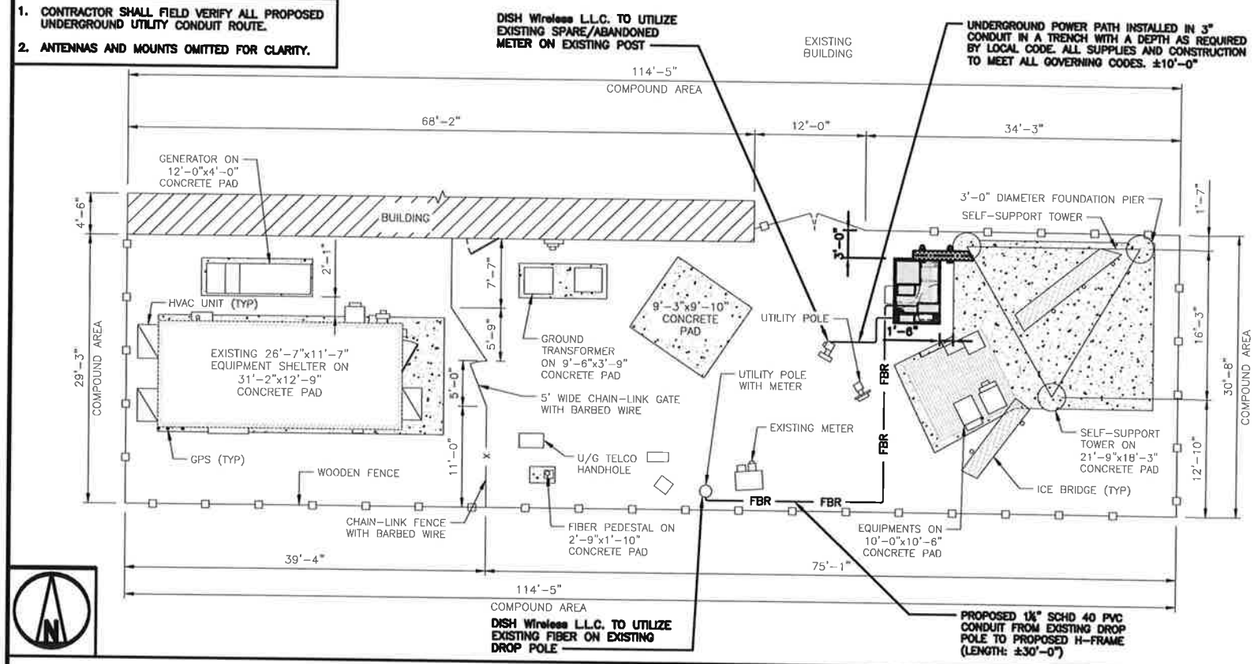

UTILITY ROUTE PLAN

8' 4' 0 8' 16'
1/8"=1'-0"

1

DC POWER WIRING SHALL BE COLOR CODED AT EACH END FOR IDENTIFYING +24V AND -48V CONDUCTORS. RED MARKINGS SHALL IDENTIFY +24V AND BLUE MARKINGS SHALL IDENTIFY -48V.

1. CONTRACTOR SHALL INSPECT THE EXISTING CONDITIONS PRIOR TO SUBMITTING A BID. ANY QUESTIONS ARISING DURING THE BID PERIOD IN REGARDS TO THE CONTRACTOR'S FUNCTIONS, THE SCOPE OF WORK, OR ANY OTHER ISSUE RELATED TO THIS PROJECT SHALL BE BROUGHT UP DURING THE BID PERIOD WITH THE PROJECT MANAGER FOR CLARIFICATION, NOT AFTER THE CONTRACT HAS BEEN AWARDED.
2. ALL ELECTRICAL WORK SHALL BE DONE IN ACCORDANCE WITH CURRENT NATIONAL ELECTRICAL CODES AND ALL STATE AND LOCAL CODES, LAWS, AND ORDINANCES. PROVIDE ALL COMPONENTS AND WIRING SIZES AS REQUIRED TO MEET NEC STANDARDS.
3. LOCATION OF EQUIPMENT, CONDUIT AND DEVICES SHOWN ON THE DRAWINGS ARE APPROXIMATE AND SHALL BE COORDINATED WITH FIELD CONDITIONS PRIOR TO CONSTRUCTION.
4. CONDUIT ROUGH-IN SHALL BE COORDINATED WITH THE MECHANICAL EQUIPMENT TO AVOID LOCATION CONFLICTS. VERIFY WITH THE MECHANICAL EQUIPMENT CONTRACTOR AND COMPLY AS REQUIRED.
5. CONTRACTOR SHALL PROVIDE ALL BREAKERS, CONDUITS AND CIRCUITS AS REQUIRED FOR A COMPLETE SYSTEM.
6. CONTRACTOR SHALL PROVIDE PULL BOXES AND JUNCTION BOXES AS REQUIRED BY THE NEC ARTICLE 314.
7. CONTRACTOR SHALL PROVIDE ALL STRAIN RELIEF AND CABLE SUPPORTS FOR ALL CABLE ASSEMBLIES. INSTALLATION SHALL BE IN ACCORDANCE WITH MANUFACTURER'S SPECIFICATIONS AND RECOMMENDATIONS.
8. ALL DISCONNECTS AND CONTROLLING DEVICES SHALL BE PROVIDED WITH ENGRAVED PHENOLIC NAMEPLATES INDICATING EQUIPMENT CONTROLLED, BRANCH CIRCUITS INSTALLED ON, AND PANEL FIELD LOCATIONS FED FROM.
9. INSTALL AN EQUIPMENT GROUNDING CONDUCTOR IN ALL CONDUITS PER THE SPECIFICATIONS AND NEC 250. THE EQUIPMENT GROUNDING CONDUCTORS SHALL BE BONDED AT ALL JUNCTION BOXES, PULL BOXES, AND ALL DISCONNECT SWITCHES, AND EQUIPMENT CABINETS.
10. ALL NEW MATERIAL SHALL HAVE A U.L. LABEL.
11. PANEL SCHEDULE LOADING AND CIRCUIT ARRANGEMENTS REFLECT POST-CONSTRUCTION EQUIPMENT.
12. CONTRACTOR SHALL BE RESPONSIBLE FOR AS-BUILT PANEL SCHEDULE AND SITE DRAWINGS.
13. ALL TRENCHES IN COMPOUND TO BE HAND DUG

ELECTRICAL NOTES

NO SCALE

2

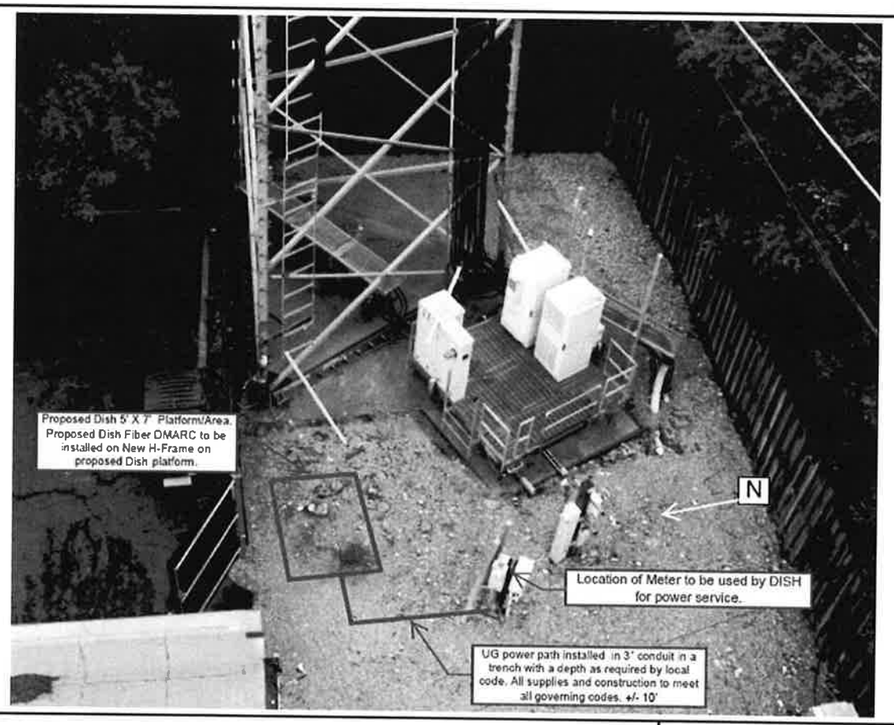

POWER PLAN

NO SCALE

3

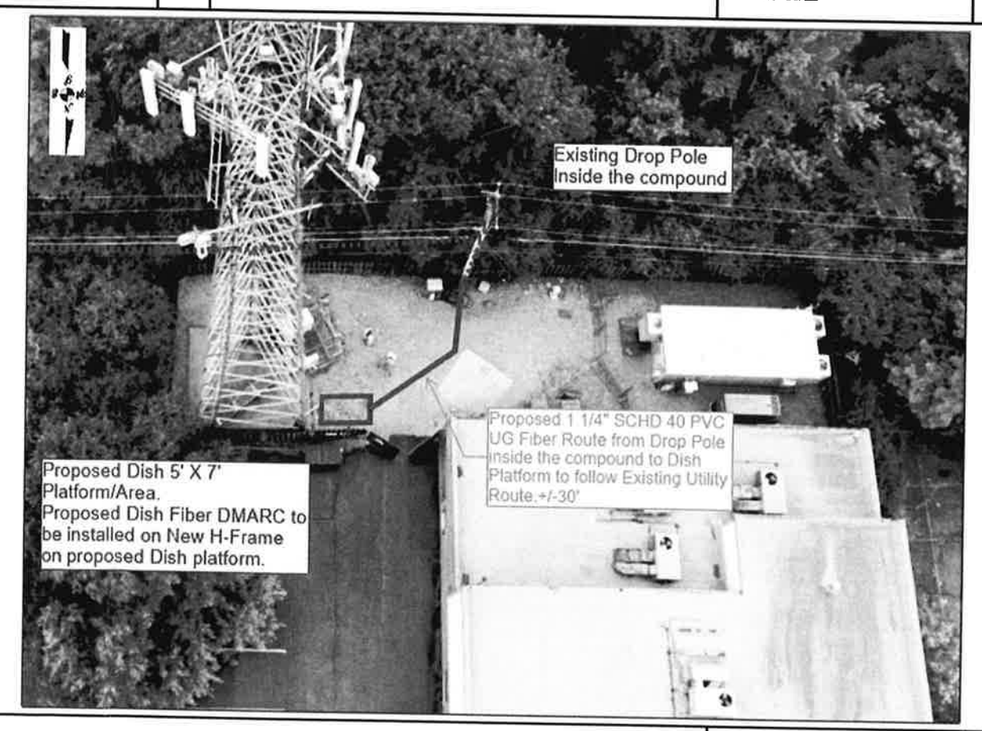

FIBER PLAN

NO SCALE

4

DISH Wireless L.L.C. TEMPLATE VERSION 48 – 2/21/2022

CHRISTOPHER J. WHITE DECLARED LICENSED PROFESSIONAL ENGINEER 062-058466 STATE OF ILLINOIS

INFINIGY ENGINEERING PLLC
LICENSE # 184005973-0002

dish wireless.
5701 SOUTH SANTA FE DRIVE
LITTLETON, CO 80120

CROWN CASTLE
2000 CORPORATE DRIVE
CANONSBURG, PA 15317

INFINIGY
FROM ZERO TO INFINIGY
the solutions are endless
2500 W. HIGGINS RD. SUITE 500 | HOFFMAN ESTATES, IL 60169
PHONE: 847-648-4068 | FAX: 318-690-0793
WWW.INFINIGY.COM

IT IS A VIOLATION OF LAW FOR ANY PERSON, UNLESS THEY ARE ACTING UNDER THE DIRECTION OF A LICENSED PROFESSIONAL ENGINEER, TO ALTER THIS DOCUMENT.

DRAWN BY:	CHECKED BY:	APPROVED BY:
RCD	SS	CJW

RFDS REV #: N/A

CONSTRUCTION DOCUMENTS

SUBMITTALS

REV	DATE	DESCRIPTION
A	07/14/2021	ISSUED FOR REVIEW
0	03/04/2022	ISSUED FOR CONSTRUCTION
1	12/12/2022	ISSUED FOR CONSTRUCTION
2	01/30/2023	ISSUED FOR CONSTRUCTION

A&E PROJECT NUMBER
6039-Z0001-C

DISH Wireless L.L.C.
PROJECT INFORMATION
CHCHI00216A
415 TAFT AVE
GLEN ELLYN, IL 60137

SHEET TITLE
ELECTRICAL/FIBER ROUTE PLANS AND NOTES

SHEET NUMBER
E-1

CARLON EXPANSION FITTINGS

COUPLING END PART#	MALE TERMINAL ADAPTER END PART#	SIZE	STD CTN QTY.	TRAVEL LENGTH
E945D	E945DX	1/2"	20	4"
E945E	E945EX	3/4"	15	4"
E945F	E945FX	1"	10	4"
E945G	E945GX	1 1/4"	5	4"
E945H	E945HX	1 1/2"	5	4"
E945J	E945JX	2"	15	8"
E945K	E945KX	2 1/2"	10	8"
E945L	E945LX	3"	10	8"
E945M	E945MX	3 1/2"	5	8"
E945N	E945NX	4"	5	8"
E945P	E945PX	5"	1	8"
E945R	E945RX	6"	1	8"

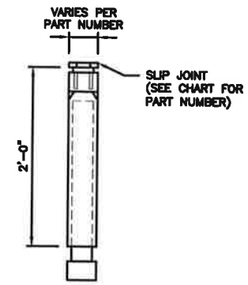

NOTE:
CONTRACTOR TO INSTALL EXPANSION FITTING SLIP JOINT AT METER CENTER CONDUIT TERMINATION, AS PER LOCAL UTILITY POLICY, ORDINANCE AND/OR SPECIFIED REQUIREMENT.

EXPANSION JOINT DETAIL | NO SCALE | 1

TRENCHING NOTES

1. CONTRACTOR SHALL RESTORE THE TRENCH TO ITS ORIGINAL CONDITIONS BY EITHER SEEDING OR SODDING GRASS AREAS, OR REPLACING ASPHALT OR CONCRETE AREAS TO ITS ORIGINAL CROSS SECTION.
2. TRENCHING SAFETY; INCLUDING, BUT NOT LIMITED TO SOIL CLASSIFICATION, SLOPING, AND SHORING, SHALL BE GOVERNED BY THE CURRENT OSHA TRENCHING AND EXCAVATION SAFETY STANDARDS.
3. ALL CONDUITS SHALL BE INSTALLED IN COMPLIANCE WITH THE CURRENT NATIONAL ELECTRIC CODE (NEC) OR AS REQUIRED BY THE LOCAL JURISDICTION, WHICHEVER IS THE MOST STRINGENT.

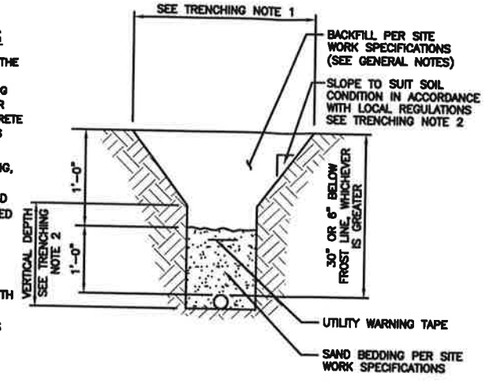

TYPICAL UNDERGROUND TRENCH DETAIL | NO SCALE | 2

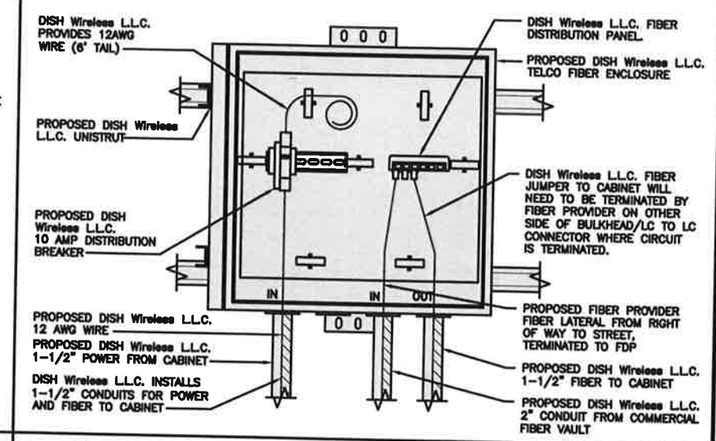

DARK TELCO BOX – INTERIOR WIRING LAYOUT | NO SCALE | 3

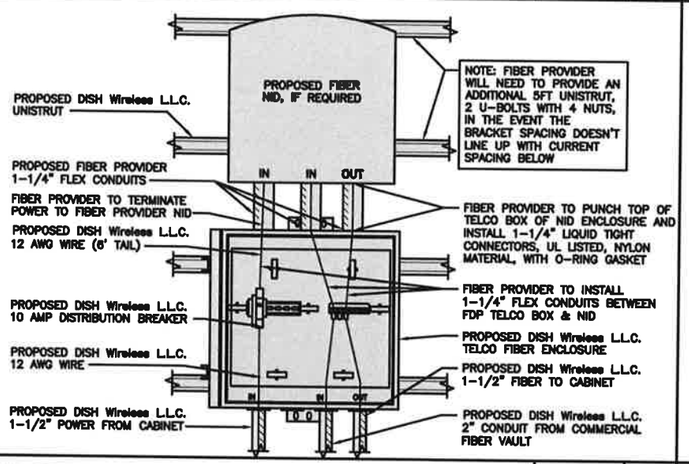

LIT TELCO BOX – INTERIOR WIRING LAYOUT (OPTIONAL) | NO SCALE | 4

NOT USED | NO SCALE | 5

NOT USED | NO SCALE | 6

NOT USED | NO SCALE | 7

NOT USED | NO SCALE | 8

NOT USED | NO SCALE | 9

DISH Wireless L.L.C. TEMPLATE VERSION 48 – 2/21/2022

INFINIGY ENGINEERING PLLC
LICENSE # 184005973-0002

dish wireless.
5701 SOUTH SANTA FE DRIVE
LITTLETON, CO 80120

CROWN CASTLE
2000 CORPORATE DRIVE
CANONSBURG, PA 15317

INFINIGY
FROM ZERO TO INFINIGY
the solutions are endless
2500 W. HIGGINS RD. SUITE 500 | HOFFMAN ESTATES, IL 60169
PHONE: 847-648-4068 | FAX: 518-690-0793
WWW.INFINIGY.COM

IT IS A VIOLATION OF LAW FOR ANY PERSON, UNLESS THEY ARE ACTING UNDER THE DIRECTION OF A LICENSED PROFESSIONAL ENGINEER, TO ALTER THIS DOCUMENT.

DRAWN BY:	CHECKED BY:	APPROVED BY:
RCD	SS	CJW

RFDS REV #: N/A

CONSTRUCTION DOCUMENTS

SUBMITTALS

REV	DATE	DESCRIPTION
A	07/14/2021	ISSUED FOR REVIEW
0	03/04/2022	ISSUED FOR CONSTRUCTION
1	12/12/2022	ISSUED FOR CONSTRUCTION
2	01/30/2023	ISSUED FOR CONSTRUCTION

A&E PROJECT NUMBER
6039-Z0001-C

DISH Wireless L.L.C.
PROJECT INFORMATION

CHCHI00216A
415 TAFT AVE
GLEN ELLYN, IL 60137

SHEET TITLE
ELECTRICAL DETAILS

SHEET NUMBER
E-2

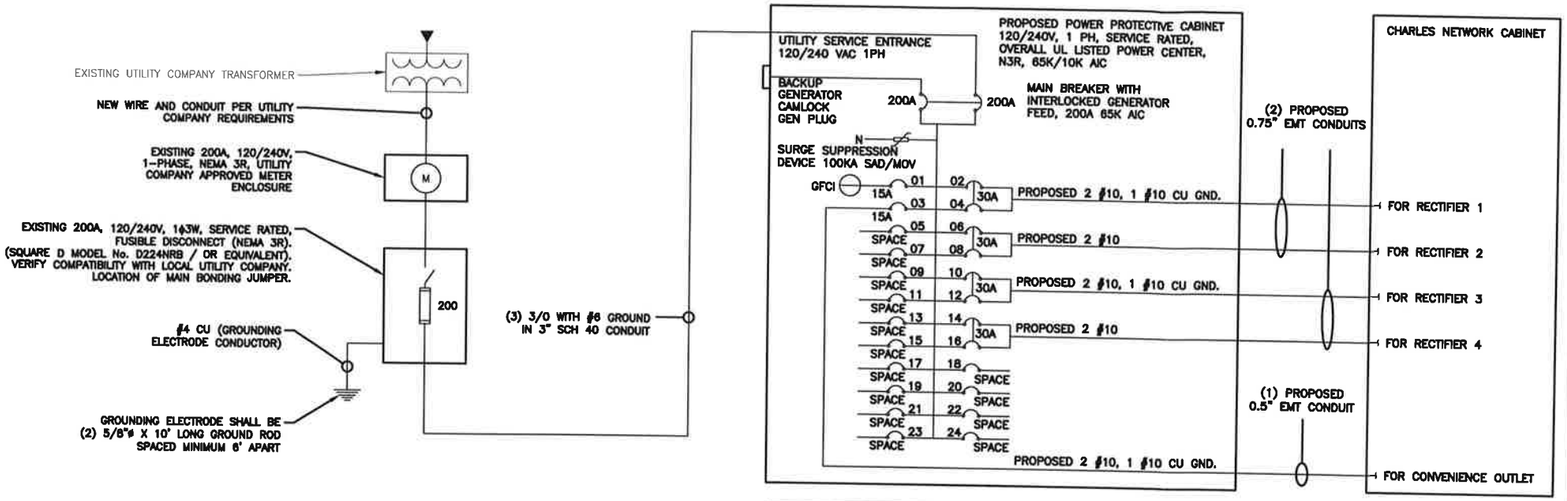

NOTE:
BRANCH CIRCUIT WIRING SUPPLYING RECTIFIERS ARE TO BE RATED UL1015, 105°C, 600V, AND PVC INSULATED, IN THE SIZES SHOWN IN THE ONE-LINE DIAGRAM. CONTRACTOR MAY SUBSTITUTE UL1015 WIRE FOR THWN-2 FOR CONVENIENCE OUTLET BRANCH CIRCUIT.

BREAKERS REQUIRED:
(4) 30A, 2P BREAKER – SQUARE D P/N:QO230
(1) 15A, 1P BREAKER – SQUARE D P/N:QO115

NOTES

THE (2) CONDUITS WITH (4) CURRENT CARRYING CONDUCTORS EACH, SHALL APPLY THE ADJUSTMENT FACTOR OF 80% PER 2014/17 NEC TABLE 310.15(B)(3)(a) OR 2020 NEC TABLE 310.15(C)(1) FOR UL1015 WIRE.

#12 FOR 15A–20A/1P BREAKER: 0.8 x 30A = 24.0A
#10 FOR 25A–30A/2P BREAKER: 0.8 x 40A = 32.0A
#8 FOR 35A–40A/2P BREAKER: 0.8 x 55A = 44.0A
#6 FOR 45A–60A/2P BREAKER: 0.8 x 75A = 60.0A

CONDUIT SIZING: AT 40% FILL PER NEC CHAPTER 9, TABLE 4, ARTICLE 358.
0.5" CONDUIT – 0.122 SQ. IN AREA
0.75" CONDUIT – 0.213 SQ. IN AREA
2.0" CONDUIT – 1.316 SQ. IN AREA
3.0" CONDUIT – 2.907 SQ. IN AREA

CABINET CONVENIENCE OUTLET CONDUCTORS (1 CONDUIT): USING THWN-2, CU.

#10 – 0.0211 SQ. IN X 2 = 0.0422 SQ. IN
#10 – 0.0211 SQ. IN X 1 = 0.0211 SQ. IN <GROUND
TOTAL = 0.0633 SQ. IN

0.5" EMT CONDUIT IS ADEQUATE TO HANDLE THE TOTAL OF (3) WIRES, INCLUDING GROUND WIRE, AS INDICATED ABOVE.

RECTIFIER CONDUCTORS (2 CONDUITS): USING UL1015, CU.

#10 – 0.0266 SQ. IN X 4 = 0.1064 SQ. IN
#10 – 0.0082 SQ. IN X 1 = 0.0082 SQ. IN <BARE GROUND
TOTAL = 0.1146 SQ. IN

0.75" EMT CONDUIT IS ADEQUATE TO HANDLE THE TOTAL OF (5) WIRES, INCLUDING GROUND WIRE, AS INDICATED ABOVE.

PPC FEED CONDUCTORS (1 CONDUIT): USING THWN, CU.

3/0 – 0.2679 SQ. IN X 3 = 0.8037 SQ. IN
#6 – 0.0507 SQ. IN X 1 = 0.0507 SQ. IN <GROUND
TOTAL = 0.8544 SQ. IN

3.0" SCH 40 PVC CONDUIT IS ADEQUATE TO HANDLE THE TOTAL OF (4) WIRES, INCLUDING GROUND WIRE, AS INDICATED ABOVE.

PPC ONE-LINE DIAGRAM

NO SCALE | 1

PROPOSED CHARLES PANEL SCHEDULE

LOAD SERVED	VOLT AMPS (WATTS) L1	VOLT AMPS (WATTS) L2	TRIP	CKT #	PHASE	CKT #	TRIP	VOLT AMPS (WATTS) L1	VOLT AMPS (WATTS) L2	LOAD SERVED
PPC GFCI OUTLET	180		15A	1	A	2	30A	2880		ABB/GE INFINITY RECTIFIER 1
CHARLES GFCI OUTLET		180	15A	3	B	4			2880	
–SPACE–				5	A	6	30A	2880		ABB/GE INFINITY RECTIFIER 2
–SPACE–				7	B	8			2880	
–SPACE–				9	A	10	30A	2880		ABB/GE INFINITY RECTIFIER 3
–SPACE–				11	B	12			2880	
–SPACE–				13	A	14	30A	2880		ABB/GE INFINITY RECTIFIER 4
–SPACE–				15	B	16			2880	
–SPACE–				17	A	18				–SPACE–
–SPACE–				19	B	20				–SPACE–
–SPACE–				21	A	22				–SPACE–
–SPACE–				23	B	24				–SPACE–
VOLTAGE AMPS	180	180						11520	11520	
200A MCB, 1ϕ, 24 SPACE, 120/240V			L1		L2					
MB RATING: 65,000 AIC			11700		11700		VOLTAGE AMPS			
			98		98		AMPS			
			98				MAX AMPS			
			123				MAX 125%			

PANEL SCHEDULE

NO SCALE | 2

NOT USED

NO SCALE | 3

DISH Wireless L.L.C. TEMPLATE VERSION 48 – 2/21/2022

INFINIGY ENGINEERING PLLC
LICENSE # 184005973-0002

dish wireless.
5701 SOUTH SANTA FE DRIVE
LITTLETON, CO 80120

CROWN CASTLE
2000 CORPORATE DRIVE
CANONSBURG, PA 15317

INFINIGY
FROM ZERO TO INFINIGY
the solutions are endless
2500 W. HIGGINS RD. SUITE 500 | HOFFMAN ESTATES, IL 60169
PHONE: 847-648-4068 | FAX: 518-690-0793
WWW.INFINIGY.COM

IT IS A VIOLATION OF LAW FOR ANY PERSON, UNLESS THEY ARE ACTING UNDER THE DIRECTION OF A LICENSED PROFESSIONAL ENGINEER, TO ALTER THIS DOCUMENT.

DRAWN BY:	CHECKED BY:	APPROVED BY:
RCD	SS	CJW

RFDS REV #: N/A

CONSTRUCTION DOCUMENTS

SUBMITTALS

REV	DATE	DESCRIPTION
A	07/14/2021	ISSUED FOR REVIEW
0	03/04/2022	ISSUED FOR CONSTRUCTION
1	12/12/2022	ISSUED FOR CONSTRUCTION
2	01/30/2023	ISSUED FOR CONSTRUCTION

A&E PROJECT NUMBER
6039-Z0001-C

DISH Wireless L.L.C.
PROJECT INFORMATION
CHCHI00216A
415 TAFT AVE
GLEN ELLYN, IL 60137

SHEET TITLE
ELECTRICAL ONE-LINE, FAULT CALCS & PANEL SCHEDULE

SHEET NUMBER
E-3

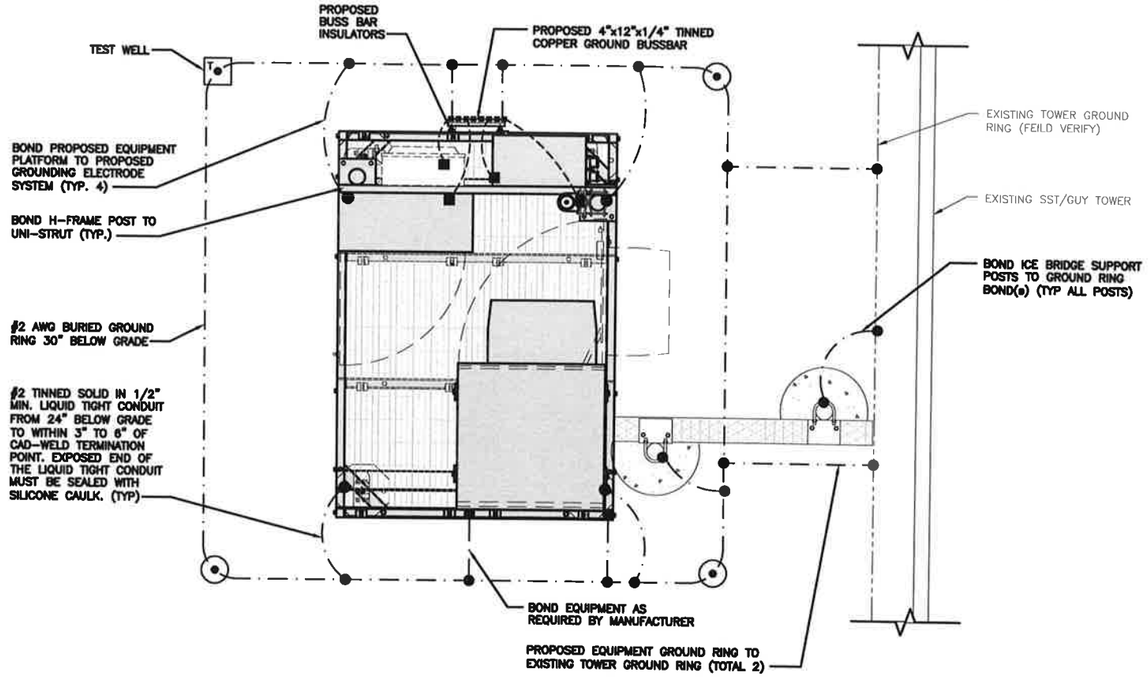

TYPICAL EQUIPMENT GROUNDING PLAN

NO SCALE | 1

NOTES

ANTENNAS AND OVP SHOWN ARE GENERIC AND NOT REFERENCING TO A SPECIFIC MANUFACTURER. THIS LAYOUT IS FOR REFERENCE PURPOSES ONLY

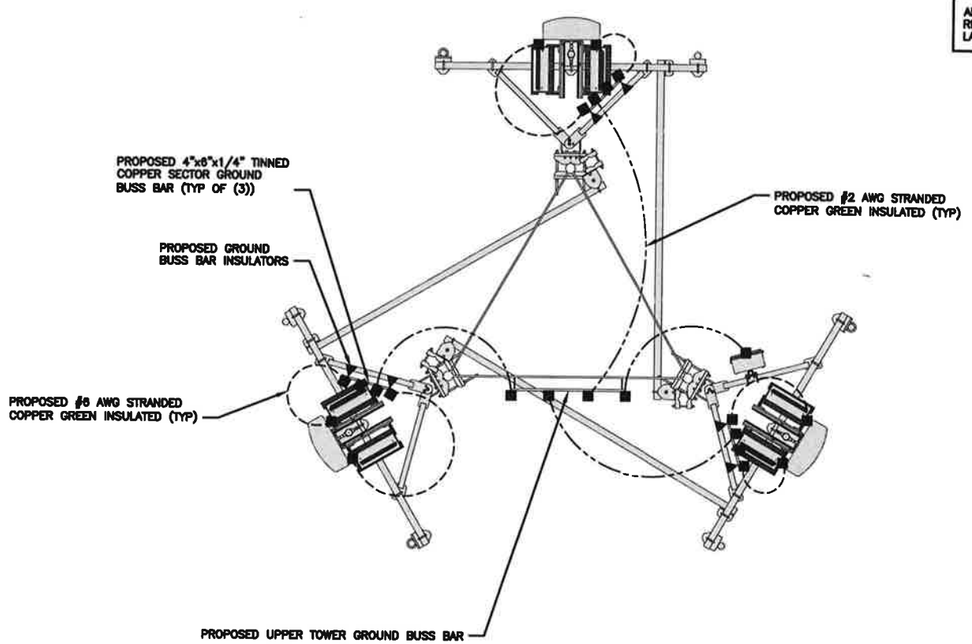

TYPICAL ANTENNA GROUNDING PLAN

NO SCALE | 2

- EXOTHERMIC CONNECTION
- MECHANICAL CONNECTION
- GROUND BUS BAR
- GROUND ROD
- TEST GROUND ROD WITH INSPECTION SLEEVE
- #6 AWG STRANDED & INSULATED
- #2 AWG SOLID COPPER TINNED
- BUSS BAR INSULATOR

GROUNDING LEGEND

1. GROUNDING IS SHOWN DIAGRAMMATICALLY ONLY.
2. CONTRACTOR SHALL GROUND ALL EQUIPMENT AS A COMPLETE SYSTEM. GROUNDING SHALL BE IN COMPLIANCE WITH NEC SECTION 250 AND DISH Wireless L.L.C. GROUNDING AND BONDING REQUIREMENTS AND MANUFACTURER'S SPECIFICATIONS.
3. ALL GROUND CONDUCTORS SHALL BE COPPER; NO ALUMINUM CONDUCTORS SHALL BE USED.

GROUNDING KEY NOTES

(A) EXTERIOR GROUND RING: #2 AWG SOLID COPPER, BURIED AT A DEPTH OF AT LEAST 30 INCHES BELOW GRADE, OR 6 INCHES BELOW THE FROST LINE AND APPROXIMATELY 24 INCHES FROM THE EXTERIOR WALL OR FOOTING.

(B) TOWER GROUND RING: THE GROUND RING SYSTEM SHALL BE INSTALLED AROUND AN ANTENNA TOWER'S LEGS, AND/OR GUY ANCHORS. WHERE SEPARATE SYSTEMS HAVE BEEN PROVIDED FOR THE TOWER AND THE BUILDING, AT LEAST TWO BONDS SHALL BE MADE BETWEEN THE TOWER RING GROUND SYSTEM AND THE BUILDING RING GROUND SYSTEM USING MINIMUM #2 AWG SOLID COPPER CONDUCTORS.

(C) INTERIOR GROUND RING: #2 AWG STRANDED GREEN INSULATED COPPER CONDUCTOR EXTENDED AROUND THE PERIMETER OF THE EQUIPMENT AREA. ALL NON-TELECOMMUNICATIONS RELATED METALLIC OBJECTS FOUND WITHIN A SITE SHALL BE GROUNDED TO THE INTERIOR GROUND RING WITH #6 AWG STRANDED GREEN INSULATED CONDUCTOR.

(D) BOND TO INTERIOR GROUND RING: #2 AWG SOLID TINNED COPPER WIRE PRIMARY BONDS SHALL BE PROVIDED AT LEAST AT FOUR POINTS ON THE INTERIOR GROUND RING, LOCATED AT THE CORNERS OF THE BUILDING.

(E) GROUND ROD: UL LISTED COPPER CLAD STEEL. MINIMUM 1/2" DIAMETER BY EIGHT FEET LONG. GROUND RODS SHALL BE INSTALLED WITH INSPECTION SLEEVES. GROUND RODS SHALL BE DRIVEN TO THE DEPTH OF GROUND RING CONDUCTOR.

(F) CELL REFERENCE GROUND BAR: POINT OF GROUND REFERENCE FOR ALL COMMUNICATIONS EQUIPMENT FRAMES. ALL BONDS ARE MADE WITH #2 AWG UNLESS NOTED OTHERWISE STRANDED GREEN INSULATED COPPER CONDUCTORS. BOND TO GROUND RING WITH (2) #2 SOLID TINNED COPPER CONDUCTORS.

(G) HATCH PLATE GROUND BAR: BOND TO THE INTERIOR GROUND RING WITH TWO #2 AWG STRANDED GREEN INSULATED COPPER CONDUCTORS. WHEN A HATCH-PLATE AND A CELL REFERENCE GROUND BAR ARE BOTH PRESENT, THE CRGB MUST BE CONNECTED TO THE HATCH-PLATE AND TO THE INTERIOR GROUND RING USING (2) TWO #2 AWG STRANDED GREEN INSULATED COPPER CONDUCTORS EACH.

(H) EXTERIOR CABLE ENTRY PORT GROUND BARS: LOCATED AT THE ENTRANCE TO THE CELL SITE BUILDING. BOND TO GROUND RING WITH A #2 AWG SOLID TINNED COPPER CONDUCTORS WITH AN EXOTHERMIC WELD AND INSPECTION SLEEVE.

(I) TELCO GROUND BAR: BOND TO BOTH CELL REFERENCE GROUND BAR OR EXTERIOR GROUND RING.

(J) FRAME BONDING: THE BONDING POINT FOR TELECOM EQUIPMENT FRAMES SHALL BE THE GROUND BUS THAT IS NOT ISOLATED FROM THE EQUIPMENTS METAL FRAMEWORK.

(K) INTERIOR UNIT BONDS: METAL FRAMES, CABINETS AND INDIVIDUAL METALLIC UNITS LOCATED WITH THE AREA OF THE INTERIOR GROUND RING REQUIRE A #6 AWG STRANDED GREEN INSULATED COPPER BOND TO THE INTERIOR GROUND RING.

(L) FENCE AND GATE GROUNDING: METAL FENCES WITHIN 7 FEET OF THE EXTERIOR GROUND RING OR OBJECTS BONDED TO THE EXTERIOR GROUND RING SHALL BE BONDED TO THE GROUND RING WITH A #2 AWG SOLID TINNED COPPER CONDUCTOR AT AN INTERVAL NOT EXCEEDING 25 FEET. BONDS SHALL BE MADE AT EACH GATE POST AND ACROSS GATE OPENINGS.

(M) EXTERIOR UNIT BONDS: METALLIC OBJECTS, EXTERNAL TO OR MOUNTED TO THE BUILDING, SHALL BE BONDED TO THE EXTERIOR GROUND RING. USING #2 TINNED SOLID COPPER WIRE

(N) ICE BRIDGE SUPPORTS: EACH ICE BRIDGE LEG SHALL BE BONDED TO THE GROUND RING WITH #2 AWG BARE TINNED COPPER CONDUCTOR. PROVIDE EXOTHERMIC WELDS AT BOTH THE ICE BRIDGE LEG AND BURIED GROUND RING.

(O) DURING ALL DC POWER SYSTEM CHANGES INCLUDING DC SYSTEM CHANGE OUTS, RECTIFIER REPLACEMENTS OR ADDITIONS, BREAKER DISTRIBUTION CHANGES, BATTERY ADDITIONS, BATTERY REPLACEMENTS AND INSTALLATIONS OR CHANGES TO DC CONVERTER SYSTEMS IT SHALL BE REQUIRED THAT SERVICE CONTRACTORS VERIFY ALL DC POWER SYSTEMS ARE EQUIPPED WITH A MASTER DC SYSTEM RETURN GROUND CONDUCTOR FROM THE DC POWER SYSTEM COMMON RETURN BUS DIRECTLY CONNECTED TO THE CELL SITE REFERENCE GROUND BAR

(P) TOWER TOP COLLECTOR BUSS BAR IS TO BE MECHANICALLY BONDED TO TOWER STEEL. REFER TO DISH Wireless L.L.C. GROUNDING NOTES.

GROUNDING KEY NOTES

NO SCALE | 3

INFINIGY ENGINEERING PLLC
LICENSE # 184005973-0002

dish wireless.
5701 SOUTH SANTA FE DRIVE
LITTLETON, CO 80120

CROWN CASTLE
2000 CORPORATE DRIVE
CANONSBURG, PA 15317

INFINIGY
FROM ZERO TO INFINIGY
the solutions are endless
2500 W. HIGGINS RD. | SUITE 500 | HOFFMAN ESTATES, IL 60169
PHONE: 847-648-4068 | FAX: 518-690-0793
WWW.INFINIGY.COM

IT IS A VIOLATION OF LAW FOR ANY PERSON, UNLESS THEY ARE ACTING UNDER THE DIRECTION OF A LICENSED PROFESSIONAL ENGINEER, TO ALTER THIS DOCUMENT.

DRAWN BY:	CHECKED BY:	APPROVED BY:
RCD	SS	CJW

RFDS REV #: N/A

CONSTRUCTION DOCUMENTS

SUBMITTALS

REV	DATE	DESCRIPTION
A	07/14/2021	ISSUED FOR REVIEW
0	03/04/2022	ISSUED FOR CONSTRUCTION
1	12/12/2022	ISSUED FOR CONSTRUCTION
2	01/30/2023	ISSUED FOR CONSTRUCTION

A&E PROJECT NUMBER
6039-Z0001-C

DISH Wireless L.L.C.
PROJECT INFORMATION

CHCHI00216A
415 TAFT AVE
GLEN ELLYN, IL 60137

SHEET TITLE
GROUNDING PLANS AND NOTES

SHEET NUMBER
G-1

NOTES

EQUIPMENT CABINET OMITTED FOR CLARITY

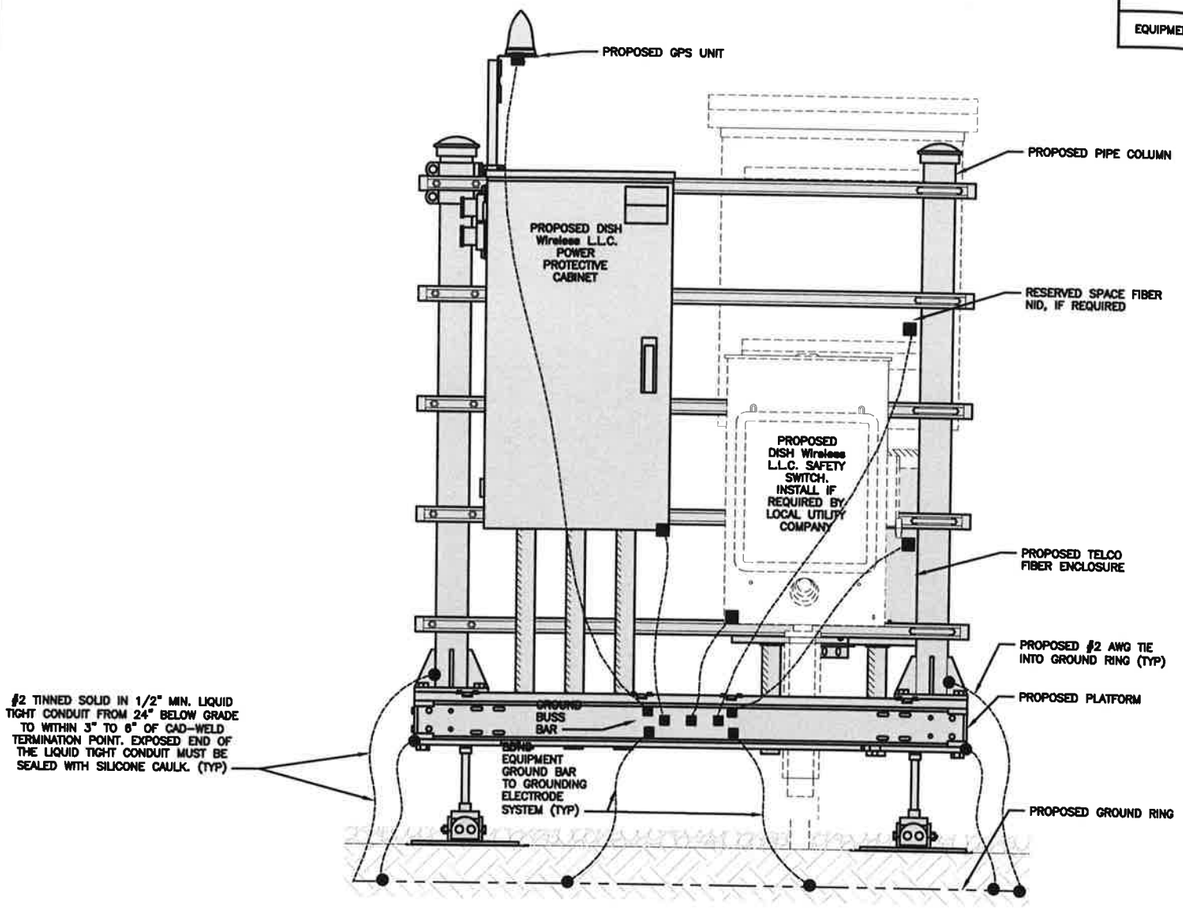

H-FRAME GROUNDING DETAIL | NO SCALE | 1

NOTES

CABLE GROUNDING NOT REQUIRED WHEN ANTENNA IS LESS THAN 10' FROM CABINET

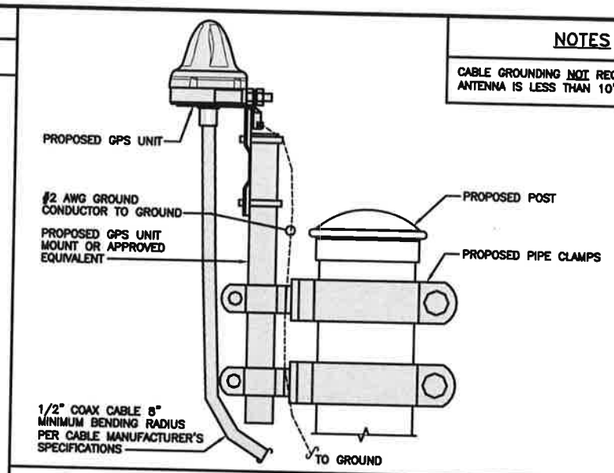

TYPICAL GPS UNIT GROUNDING | NO SCALE | 2

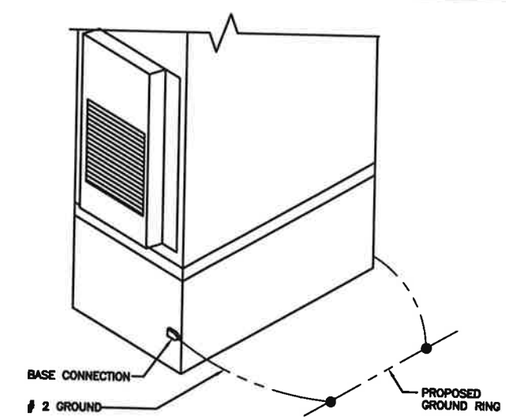

OUTDOOR CABINET GROUNDING | NO SCALE | 3

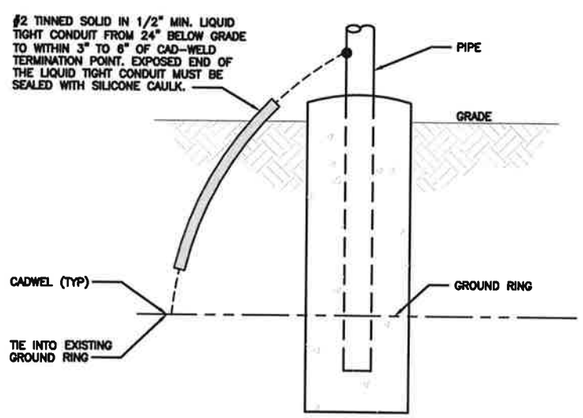

TRANSITIONING GROUND DETAIL | NO SCALE | 4

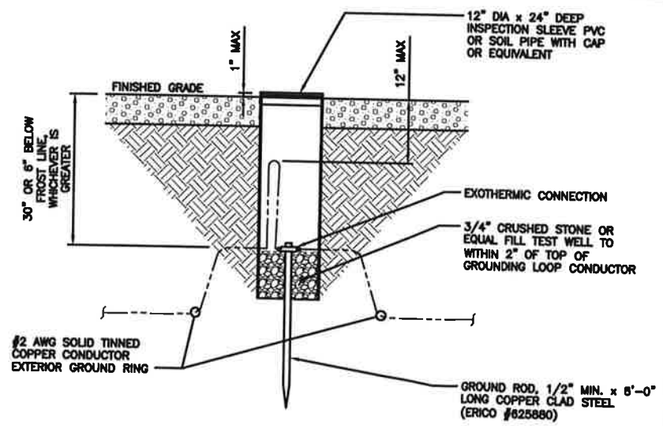

TYPICAL TEST GROUND ROD WITH INSPECTION SLEEVE | NO SCALE | 5

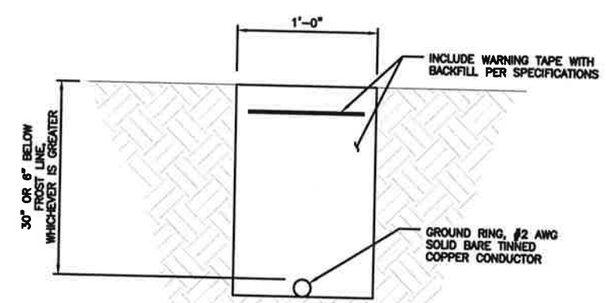

TYPICAL GROUND RING TRENCH | NO SCALE | 6

DISH Wireless L.L.C. TEMPLATE VERSION 48 – 2/21/2022

INFINIGY ENGINEERING PLLC
LICENSE # 184005973-0002

dish wireless.
5701 SOUTH SANTA FE DRIVE
LITTLETON, CO 80120

CROWN CASTLE
2000 CORPORATE DRIVE
CANONSBURG, PA 15317

INFINIGY
FROM ZERO TO INFINIGY
the solutions are endless
2500 W. HIGGINS RD. SUITE 500 | HOFFMAN ESTATES, IL 60169
PHONE: 847-648-4068 | FAX: 518-690-0793
WWW.INFINIGY.COM

IT IS A VIOLATION OF LAW FOR ANY PERSON, UNLESS THEY ARE ACTING UNDER THE DIRECTION OF A LICENSED PROFESSIONAL ENGINEER, TO ALTER THIS DOCUMENT.

DRAWN BY:	CHECKED BY:	APPROVED BY:
RCD	SS	CJW

RFDS REV #: N/A

CONSTRUCTION DOCUMENTS

SUBMITTALS

REV	DATE	DESCRIPTION
A	07/14/2021	ISSUED FOR REVIEW
0	03/04/2022	ISSUED FOR CONSTRUCTION
1	12/12/2022	ISSUED FOR CONSTRUCTION
2	01/30/2023	ISSUED FOR CONSTRUCTION

A&E PROJECT NUMBER
6039-Z0001-C

DISH Wireless L.L.C.
PROJECT INFORMATION

CHCHI00216A
415 TAFT AVE
GLEN ELLYN, IL 60137

SHEET TITLE
GROUNDING DETAILS

SHEET NUMBER
G-2

1. EXOTHERMIC WELD (2) TWO, #2 AWG BARE TINNED SOLID COPPER CONDUCTORS TO GROUND BAR. ROUTE CONDUCTORS TO BURIED GROUND RING AND PROVIDE PARALLEL EXOTHERMIC WELD.
2. ALL EXTERIOR GROUNDING HARDWARE SHALL BE STAINLESS STEEL 3/8" DIAMETER OR LARGER. ALL HARDWARE 18-8 STAINLESS STEEL INCLUDING LOCK WASHERS, COAT ALL SURFACES WITH AN ANTI-OXIDANT COMPOUND BEFORE MATING.
3. FOR GROUND BOND TO STEEL ONLY: COAT ALL SURFACES WITH AN ANTI-OXIDANT COMPOUND BEFORE MATING.
4. DO NOT INSTALL CABLE GROUNDING KIT AT A BEND AND ALWAYS DIRECT GROUND CONDUCTOR DOWN TO GROUNDING BUS.
5. NUT & WASHER SHALL BE PLACED ON THE FRONT SIDE OF THE GROUND BAR AND BOLTED ON THE BACK SIDE.
6. ALL GROUNDING PARTS AND EQUIPMENT TO BE SUPPLIED AND INSTALLED BY CONTRACTOR.
7. THE CONTRACTOR SHALL BE RESPONSIBLE FOR INSTALLING ADDITIONAL GROUND BAR AS REQUIRED.
8. ENSURE THE WIRE INSULATION TERMINATION IS WITHIN 1/8" OF THE BARREL (NO SHINERS).

TYPICAL GROUNDING NOTES | NO SCALE | 1

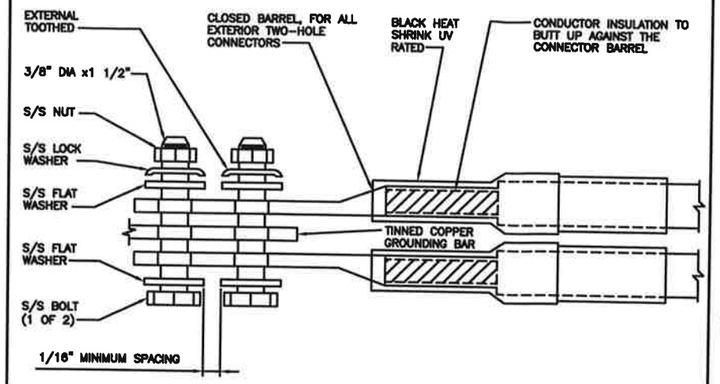

TYPICAL EXTERIOR TWO HOLE LUG | NO SCALE | 2

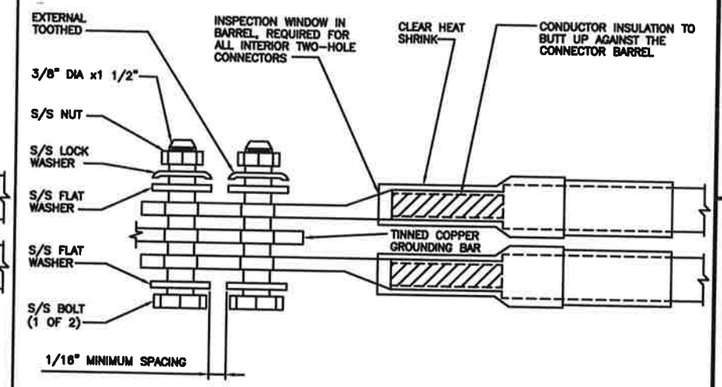

TYPICAL INTERIOR TWO HOLE LUG | NO SCALE | 3

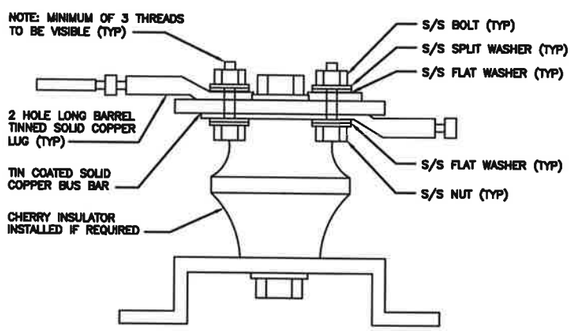

LUG DETAIL | NO SCALE | 4

NOT USED | NO SCALE | 5

NOT USED | NO SCALE | 6

NOT USED | NO SCALE | 7

NOT USED | NO SCALE | 8

NOT USED | NO SCALE | 9

DISH Wireless L.L.C. TEMPLATE VERSION 48 – 2/21/2022

CHRISTOPHER J. WILSON 062.058492 LICENSED PROFESSIONAL ENGINEER STATE OF ILLINOIS

INFINIGY ENGINEERING PLLC
LICENSE # 184005973-0002

dish wireless.
5701 SOUTH SANTA FE DRIVE
LITTLETON, CO 80120

CROWN CASTLE
2000 CORPORATE DRIVE
CANONSBURG, PA 15317

INFINIGY
FROM ZERO TO INFINIGY
the solutions are endless
2500 W. HIGGINS RD. SUITE 500 | HOFFMAN ESTATES, IL 60169
PHONE: 847-648-4068 | FAX: 518-690-0793
WWW.INFINIGY.COM

IT IS A VIOLATION OF LAW FOR ANY PERSON, UNLESS THEY ARE ACTING UNDER THE DIRECTION OF A LICENSED PROFESSIONAL ENGINEER, TO ALTER THIS DOCUMENT.

DRAWN BY:	CHECKED BY:	APPROVED BY:
RCD	SS	CJW

RFDS REV #: N/A

CONSTRUCTION DOCUMENTS

SUBMITTALS

REV	DATE	DESCRIPTION
A	07/14/2021	ISSUED FOR REVIEW
0	03/04/2022	ISSUED FOR CONSTRUCTION
1	12/12/2022	ISSUED FOR CONSTRUCTION
2	01/30/2023	ISSUED FOR CONSTRUCTION

A&E PROJECT NUMBER
6039-Z0001-C

DISH Wireless L.L.C.
PROJECT INFORMATION

CHCHI00216A
415 TAFT AVE
GLEN ELLYN, IL 60137

SHEET TITLE
GROUNDING DETAILS

SHEET NUMBER
G-3

RF JUMPER COLOR CODING

3/4" TAPE WIDTHS WITH 3/4" SPACING

LOW-BAND RRH –
(600MHz N71 BASEBAND) +
(850MHz N26 BAND) +
(700MHz N29 BAND) – OPTIONAL PER MARKET

ADD FREQUENCY COLOR TO SECTOR BAND
(CBRS WILL USE YELLOW BANDS)

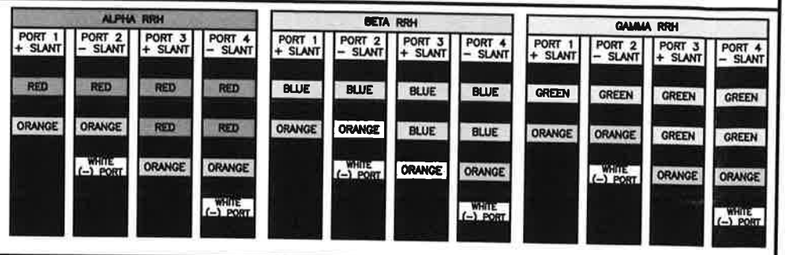

MID-BAND RRH –
(AWS BANDS N66+N70)

ADD FREQUENCY COLOR TO SECTOR BAND
(CBRS WILL USE YELLOW BANDS)

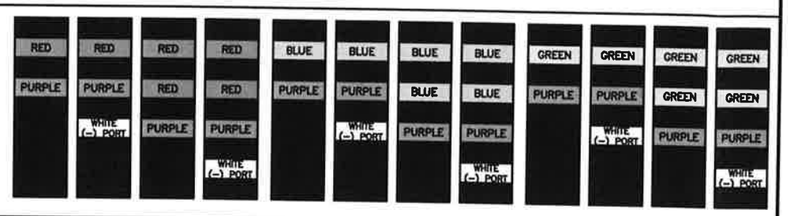

HYBRID/DISCREET CABLES

INCLUDE SECTOR BANDS BEING SUPPORTED ALONG WITH FREQUENCY BANDS

EXAMPLE 1 – HYBRID, OR DISCREET, SUPPORTS ALL SECTORS, BOTH LOW-BANDS AND MID-BANDS

EXAMPLE 2 – HYBRID, OR DISCREET, SUPPORTS CBRS ONLY, ALL SECTORS

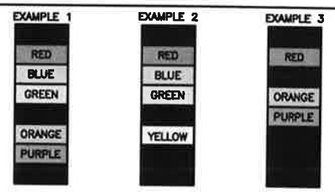

FIBER JUMPERS TO RRHs

LOW-BAND RRH FIBER CABLES HAVE SECTOR STRIPE ONLY

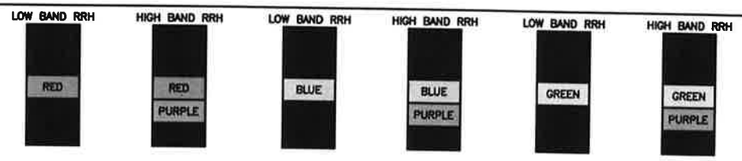

POWER CABLES TO RRHs

LOW-BAND RRH POWER CABLES HAVE SECTOR STRIPE ONLY

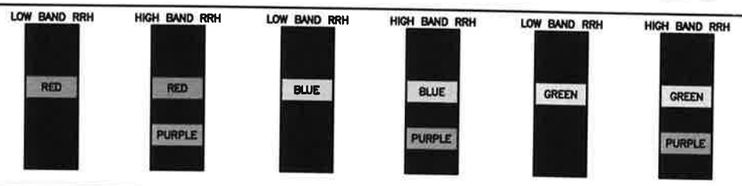

RET MOTORS AT ANTENNAS

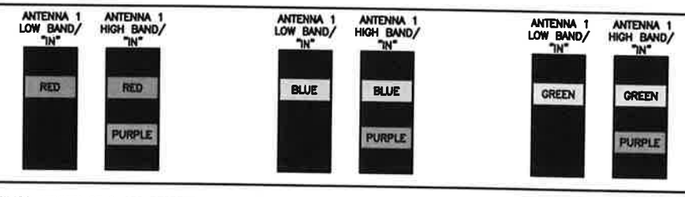

MICROWAVE RADIO LINKS

LINKS WILL HAVE A 1.5–2 INCH WHITE WRAP WITH THE AZIMUTH COLOR OVERLAPPING IN THE MIDDLE. ADD ADDITIONAL SECTOR COLOR BANDS FOR EACH ADDITIONAL MW RADIO.

MICROWAVE CABLES WILL REQUIRE P-TOUCH LABELS INSIDE THE CABINET TO IDENTIFY THE LOCAL AND REMOTE SITE ID'S

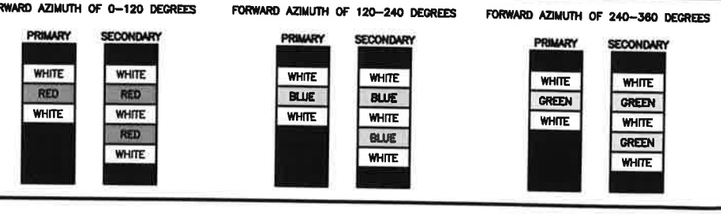

RF CABLE COLOR CODES | NO SCALE | 1

LOW BANDS (N71+N26) OPTIONAL – (N29): ORANGE

AWS (N66+N70+H-BLOCK): PURPLE

CBRS TECH (3 GHz): YELLOW

NEGATIVE SLANT PORT ON ANT/RRH: WHITE

ALPHA SECTOR: RED

BETA SECTOR: BLUE

GAMMA SECTOR: GREEN

COLOR IDENTIFIER | NO SCALE | 2

NOT USED | NO SCALE | 3

NOT USED | NO SCALE | 4

INFINIGY ENGINEERING PLLC
LICENSE # 184005973-0002

dish wireless.
5701 SOUTH SANTA FE DRIVE
LITTLETON, CO 80120

CROWN CASTLE
2000 CORPORATE DRIVE
CANONSBURG, PA 15317

INFINIGY
FROM ZERO TO INFINIGY
the solutions are endless
2500 W. HIGGINS RD. SUITE 500 |
HOFFMAN ESTATES, IL 60169
PHONE: 847-648-4068 | FAX: 518-690-0793
WWW.INFINIGY.COM

IT IS A VIOLATION OF LAW FOR ANY PERSON, UNLESS THEY ARE ACTING UNDER THE DIRECTION OF A LICENSED PROFESSIONAL ENGINEER, TO ALTER THIS DOCUMENT.

DRAWN BY:	CHECKED BY:	APPROVED BY:
RCD	SS	CJW

RFDS REV #: N/A

CONSTRUCTION DOCUMENTS

SUBMITTALS

REV	DATE	DESCRIPTION
A	07/14/2021	ISSUED FOR REVIEW
0	03/04/2022	ISSUED FOR CONSTRUCTION
1	12/12/2022	ISSUED FOR CONSTRUCTION
2	01/30/2023	ISSUED FOR CONSTRUCTION

A&E PROJECT NUMBER
6039-Z0001-C

DISH Wireless L.L.C.
PROJECT INFORMATION

CHCHI00216A
415 TAFT AVE
GLEN ELLYN, IL 60137

SHEET TITLE
RF
CABLE COLOR CODE

SHEET NUMBER
RF-1

EXOTHERMIC CONNECTION
MECHANICAL CONNECTION
BUSS BAR INSULATOR
CHEMICAL ELECTROLYTIC GROUNDING SYSTEM
TEST CHEMICAL ELECTROLYTIC GROUNDING SYSTEM
EXOTHERMIC WITH INSPECTION SLEEVE
GROUNDING BAR
GROUND ROD
TEST GROUND ROD WITH INSPECTION SLEEVE
SINGLE POLE SWITCH
DUPLEX RECEPTACLE
DUPLEX GFCI RECEPTACLE
FLUORESCENT LIGHTING FIXTURE (2) TWO LAMPS 48–T8
SMOKE DETECTION (DC)
EMERGENCY LIGHTING (DC)
SECURITY LIGHT W/PHOTOCELL LITHONIA ALXW LED–1–25A400/51K–SR4–120–PE–DDBTXD
CHAIN LINK FENCE
WOOD/WROUGHT IRON FENCE
WALL STRUCTURE
LEASE AREA
PROPERTY LINE (PL)
SETBACKS
ICE BRIDGE
CABLE TRAY
WATER LINE
UNDERGROUND POWER
UNDERGROUND TELCO
OVERHEAD POWER
OVERHEAD TELCO
UNDERGROUND TELCO/POWER
ABOVE GROUND POWER
ABOVE GROUND TELCO
ABOVE GROUND TELCO/POWER
WORKPOINT
SECTION REFERENCE
DETAIL REFERENCE

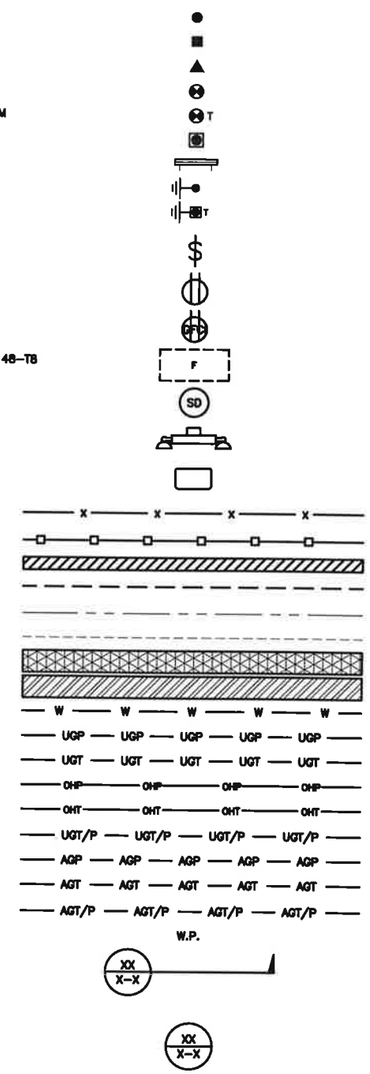

LEGEND

AB	ANCHOR BOLT
ABV	ABOVE
AC	ALTERNATING CURRENT
ADDL	ADDITIONAL
AFF	ABOVE FINISHED FLOOR
AFG	ABOVE FINISHED GRADE
AGL	ABOVE GROUND LEVEL
AIC	AMPERAGE INTERRUPTION CAPACITY
ALUM	ALUMINUM
ALT	ALTERNATE
ANT	ANTENNA
APPROX	APPROXIMATE
ARCH	ARCHITECTURAL
ATS	AUTOMATIC TRANSFER SWITCH
AWG	AMERICAN WIRE GAUGE
BATT	BATTERY
BLDG	BUILDING
BLK	BLOCK
BLKG	BLOCKING
BM	BEAM
BTC	BARE TINNED COPPER CONDUCTOR
BOF	BOTTOM OF FOOTING
CAB	CABINET
CANT	CANTILEVERED
CHG	CHARGING
CLG	CEILING
CLR	CLEAR
COL	COLUMN
COMM	COMMON
CONC	CONCRETE
CONSTR	CONSTRUCTION
DBL	DOUBLE
DC	DIRECT CURRENT
DEPT	DEPARTMENT
DF	DOUGLAS FIR
DIA	DIAMETER
DIAG	DIAGONAL
DIM	DIMENSION
DWG	DRAWING
DWL	DOWEL
EA	EACH
EC	ELECTRICAL CONDUCTOR
EL.	ELEVATION
ELEC	ELECTRICAL
EMT	ELECTRICAL METALLIC TUBING
ENG	ENGINEER
EQ	EQUAL
EXP	EXPANSION
EXT	EXTERIOR
EW	EACH WAY
FAB	FABRICATION
FF	FINISH FLOOR
FG	FINISH GRADE
FIF	FACILITY INTERFACE FRAME
FIN	FINISH(ED)
FLR	FLOOR
FDN	FOUNDATION
FOC	FACE OF CONCRETE
FOM	FACE OF MASONRY
FOS	FACE OF STUD
FOW	FACE OF WALL
FS	FINISH SURFACE
FT	FOOT
FTG	FOOTING
GA	GAUGE
GEN	GENERATOR
GFCI	GROUND FAULT CIRCUIT INTERRUPTER
GLB	GLUE LAMINATED BEAM
GLV	GALVANIZED
GPS	GLOBAL POSITIONING SYSTEM
GND	GROUND
GSM	GLOBAL SYSTEM FOR MOBILE
HDG	HOT DIPPED GALVANIZED
HDR	HEADER
HGR	HANGER
HVAC	HEAT/VENTILATION/AIR CONDITIONING
HT	HEIGHT
IGR	INTERIOR GROUND RING
IN	INCH
INT	INTERIOR
LB(S)	POUND(S)
LF	LINEAR FEET
LTE	LONG TERM EVOLUTION
MAS	MASONRY
MAX	MAXIMUM
MB	MACHINE BOLT
MECH	MECHANICAL
MFR	MANUFACTURER
MGB	MASTER GROUND BAR
MIN	MINIMUM
MISC	MISCELLANEOUS
MTL	METAL
MTS	MANUAL TRANSFER SWITCH
MW	MICROWAVE
NEC	NATIONAL ELECTRIC CODE
NM	NEWTON METERS
NO.	NUMBER
#	NUMBER
NTS	NOT TO SCALE
OC	ON–CENTER
OSHA	OCCUPATIONAL SAFETY AND HEALTH ADMINISTRATION
OPNG	OPENING
P/C	PRECAST CONCRETE
PCS	PERSONAL COMMUNICATION SERVICES
PCU	PRIMARY CONTROL UNIT
PRC	PRIMARY RADIO CABINET
PP	POLARIZING PRESERVING
PSF	POUNDS PER SQUARE FOOT
PSI	POUNDS PER SQUARE INCH
PT	PRESSURE TREATED
PWR	POWER CABINET
QTY	QUANTITY
RAD	RADIUS
RECT	RECTIFIER
REF	REFERENCE
REINF	REINFORCEMENT
REQ'D	REQUIRED
RET	REMOTE ELECTRIC TILT
RF	RADIO FREQUENCY
RMC	RIGID METALLIC CONDUIT
RRH	REMOTE RADIO HEAD
RRU	REMOTE RADIO UNIT
RWY	RACEWAY
SCH	SCHEDULE
SHT	SHEET
SIAD	SMART INTEGRATED ACCESS DEVICE
SIM	SIMILAR
SPEC	SPECIFICATION
SQ	SQUARE
SS	STAINLESS STEEL
STD	STANDARD
STL	STEEL
TEMP	TEMPORARY
THK	THICKNESS
TMA	TOWER MOUNTED AMPLIFIER
TN	TOE NAIL
TOA	TOP OF ANTENNA
TOC	TOP OF CURB
TOF	TOP OF FOUNDATION
TOP	TOP OF PLATE (PARAPET)
TOS	TOP OF STEEL
TOW	TOP OF WALL
TVSS	TRANSIENT VOLTAGE SURGE SUPPRESSION
TYP	TYPICAL
UG	UNDERGROUND
UL	UNDERWRITERS LABORATORY
UNO	UNLESS NOTED OTHERWISE
UMTS	UNIVERSAL MOBILE TELECOMMUNICATIONS SYSTEM
UPS	UNITERRUPTIBLE POWER SYSTEM (DC POWER PLANT)
VIF	VERIFIED IN FIELD
W	WIDE
W/	WITH
WD	WOOD
WP	WEATHERPROOF
WT	WEIGHT

ABBREVIATIONS

INFINIGY ENGINEERING PLLC
LICENSE # 184005973-0002

5701 SOUTH SANTA FE DRIVE
LITTLETON, CO 80120

CROWN CASTLE
2000 CORPORATE DRIVE
CANONSBURG, PA 15317

INFINIGY
FROM ZERO TO INFINIGY
the solutions are endless
2500 W. HIGGINS RD. SUITE 500 | HOFFMAN ESTATES, IL 60169
PHONE: 847-648-4068 | FAX: 518-690-0793
WWW.INFINIGY.COM

IT IS A VIOLATION OF LAW FOR ANY PERSON, UNLESS THEY ARE ACTING UNDER THE DIRECTION OF A LICENSED PROFESSIONAL ENGINEER, TO ALTER THIS DOCUMENT.

DRAWN BY:	CHECKED BY:	APPROVED BY:
RCD	SS	CJW

RFDS REV #: N/A

CONSTRUCTION DOCUMENTS

SUBMITTALS

REV	DATE	DESCRIPTION
A	07/14/2021	ISSUED FOR REVIEW
0	03/04/2022	ISSUED FOR CONSTRUCTION
1	12/12/2022	ISSUED FOR CONSTRUCTION
2	01/30/2023	ISSUED FOR CONSTRUCTION

A&E PROJECT NUMBER
6039–Z0001–C

DISH Wireless L.L.C.
PROJECT INFORMATION

CHCHI00216A
415 TAFT AVE
GLEN ELLYN, IL 60137

SHEET TITLE
LEGEND AND ABBREVIATIONS

SHEET NUMBER
GN-1

SITE ACTIVITY REQUIREMENTS:

1. NOTICE TO PROCEED – NO WORK SHALL COMMENCE PRIOR TO CONTRACTOR RECEIVING A WRITTEN NOTICE TO PROCEED (NTP) AND THE ISSUANCE OF A PURCHASE ORDER. PRIOR TO ACCESSING/ENTERING THE SITE YOU MUST CONTACT THE DISH Wireless L.L.C. AND TOWER OWNER NOC & THE DISH Wireless L.L.C. AND TOWER OWNER CONSTRUCTION MANAGER.

2. "LOOK UP" – DISH Wireless L.L.C. AND TOWER OWNER SAFETY CLIMB REQUIREMENT:

THE INTEGRITY OF THE SAFETY CLIMB AND ALL COMPONENTS OF THE CLIMBING FACILITY SHALL BE CONSIDERED DURING ALL STAGES OF DESIGN, INSTALLATION, AND INSPECTION. TOWER MODIFICATION, MOUNT REINFORCEMENTS, AND/OR EQUIPMENT INSTALLATIONS SHALL NOT COMPROMISE THE INTEGRITY OR FUNCTIONAL USE OF THE SAFETY CLIMB OR ANY COMPONENTS OF THE CLIMBING FACILITY ON THE STRUCTURE. THIS SHALL INCLUDE, BUT NOT BE LIMITED TO: PINCHING OF THE WIRE ROPE, BENDING OF THE WIRE ROPE FROM ITS SUPPORTS, DIRECT CONTACT OR CLOSE PROXIMITY TO THE WIRE ROPE WHICH MAY CAUSE FRICTIONAL WEAR, IMPACT TO THE ANCHORAGE POINTS IN ANY WAY, OR TO IMPEDE/BLOCK ITS INTENDED USE. ANY COMPROMISED SAFETY CLIMB, INCLUDING EXISTING CONDITIONS MUST BE TAGGED OUT AND REPORTED TO YOUR DISH Wireless L.L.C. AND DISH Wireless L.L.C. AND TOWER OWNER POC OR CALL THE NOC TO GENERATE A SAFETY CLIMB MAINTENANCE AND CONTRACTOR NOTICE TICKET.

3. PRIOR TO THE START OF CONSTRUCTION, ALL REQUIRED JURISDICTIONAL PERMITS SHALL BE OBTAINED. THIS INCLUDES, BUT IS NOT LIMITED TO, BUILDING, ELECTRICAL, MECHANICAL, FIRE, FLOOD ZONE, ENVIRONMENTAL, AND ZONING. AFTER ONSITE ACTIVITIES AND CONSTRUCTION ARE COMPLETED, ALL REQUIRED PERMITS SHALL BE SATISFIED AND CLOSED OUT ACCORDING TO LOCAL JURISDICTIONAL REQUIREMENTS.

4. ALL CONSTRUCTION MEANS AND METHODS; INCLUDING BUT NOT LIMITED TO, ERECTION PLANS, RIGGING PLANS, CLIMBING PLANS, AND RESCUE PLANS SHALL BE THE RESPONSIBILITY OF THE GENERAL CONTRACTOR RESPONSIBLE FOR THE EXECUTION OF THE WORK CONTAINED HEREIN, AND SHALL MEET ANSI/ASSE A10.48 (LATEST EDITION); FEDERAL, STATE, AND LOCAL REGULATIONS; AND ANY APPLICABLE INDUSTRY CONSENSUS STANDARDS RELATED TO THE CONSTRUCTION ACTIVITIES BEING PERFORMED. ALL RIGGING PLANS SHALL ADHERE TO ANSI/ASSE A10.48 (LATEST EDITION) AND DISH Wireless L.L.C. AND TOWER OWNER STANDARDS, INCLUDING THE REQUIRED INVOLVEMENT OF A QUALIFIED ENGINEER FOR CLASS IV CONSTRUCTION, TO CERTIFY THE SUPPORTING STRUCTURE(S) IN ACCORDANCE WITH ANSI/TIA–322 (LATEST EDITION).

5. ALL SITE WORK TO COMPLY WITH DISH Wireless L.L.C. AND TOWER OWNER INSTALLATION STANDARDS FOR CONSTRUCTION ACTIVITIES ON DISH Wireless L.L.C. AND TOWER OWNER TOWER SITE AND LATEST VERSION OF ANSI/TIA–1019–A–2012 "STANDARD FOR INSTALLATION, ALTERATION, AND MAINTENANCE OF ANTENNA SUPPORTING STRUCTURES AND ANTENNAS."

6. IF THE SPECIFIED EQUIPMENT CAN NOT BE INSTALLED AS SHOWN ON THESE DRAWINGS, THE CONTRACTOR SHALL PROPOSE AN ALTERNATIVE INSTALLATION FOR APPROVAL BY DISH Wireless L.L.C. AND TOWER OWNER PRIOR TO PROCEEDING WITH ANY SUCH CHANGE OF INSTALLATION.

7. ALL MATERIALS FURNISHED AND INSTALLED SHALL BE IN STRICT ACCORDANCE WITH ALL APPLICABLE CODES, REGULATIONS AND ORDINANCES. CONTRACTOR SHALL ISSUE ALL APPROPRIATE NOTICES AND COMPLY WITH ALL LAWS, ORDINANCES, RULES, REGULATIONS AND LAWFUL ORDERS OF ANY PUBLIC AUTHORITY REGARDING THE PERFORMANCE OF THE WORK. ALL WORK CARRIED OUT SHALL COMPLY WITH ALL APPLICABLE MUNICIPAL AND UTILITY COMPANY SPECIFICATIONS AND LOCAL JURISDICTIONAL CODES, ORDINANCES AND APPLICABLE REGULATIONS.

8. THE CONTRACTOR SHALL INSTALL ALL EQUIPMENT AND MATERIALS IN ACCORDANCE WITH MANUFACTURER'S RECOMMENDATIONS UNLESS SPECIFICALLY STATED OTHERWISE.

9. THE CONTRACTOR SHALL CONTACT UTILITY LOCATING SERVICES INCLUDING PRIVATE LOCATES SERVICES PRIOR TO THE START OF CONSTRUCTION.

10. ALL EXISTING ACTIVE SEWER, WATER, GAS, ELECTRIC AND OTHER UTILITIES WHERE ENCOUNTERED IN THE WORK, SHALL BE PROTECTED AT ALL TIMES AND WHERE REQUIRED FOR THE PROPER EXECUTION OF THE WORK, SHALL BE RELOCATED AS DIRECTED BY CONTRACTOR. EXTREME CAUTION SHOULD BE USED BY THE CONTRACTOR WHEN EXCAVATING OR DRILLING PIERS AROUND OR NEAR UTILITIES. CONTRACTOR SHALL PROVIDE SAFETY TRAINING FOR THE WORKING CREW. THIS WILL INCLUDE BUT NOT BE LIMITED TO A) FALL PROTECTION B) CONFINED SPACE C) ELECTRICAL SAFETY D) TRENCHING AND EXCAVATION E) CONSTRUCTION SAFETY PROCEDURES.

11. ALL SITE WORK SHALL BE AS INDICATED ON THE STAMPED CONSTRUCTION DRAWINGS AND DISH PROJECT SPECIFICATIONS, LATEST APPROVED REVISION.

12. CONTRACTOR SHALL KEEP THE SITE FREE FROM ACCUMULATING WASTE MATERIAL, DEBRIS, AND TRASH AT THE COMPLETION OF THE WORK. IF NECESSARY, RUBBISH, STUMPS, DEBRIS, STICKS, STONES AND OTHER REFUSE SHALL BE REMOVED FROM THE SITE AND DISPOSED OF LEGALLY.

13. ALL EXISTING INACTIVE SEWER, WATER, GAS, ELECTRIC AND OTHER UTILITIES, WHICH INTERFERE WITH THE EXECUTION OF THE WORK, SHALL BE REMOVED AND/OR CAPPED, PLUGGED OR OTHERWISE DISCONTINUED AT POINTS WHICH WILL NOT INTERFERE WITH THE EXECUTION OF THE WORK, SUBJECT TO THE APPROVAL OF DISH Wireless L.L.C. AND TOWER OWNER, AND/OR LOCAL UTILITIES.

14. THE CONTRACTOR SHALL PROVIDE SITE SIGNAGE IN ACCORDANCE WITH THE TECHNICAL SPECIFICATION FOR SITE SIGNAGE REQUIRED BY LOCAL JURISDICTION AND SIGNAGE REQUIRED ON INDIVIDUAL PIECES OF EQUIPMENT, ROOMS, AND SHELTERS.

15. THE SITE SHALL BE GRADED TO CAUSE SURFACE WATER TO FLOW AWAY FROM THE CARRIER'S EQUIPMENT AND TOWER AREAS.

16. THE SUB GRADE SHALL BE COMPACTED AND BROUGHT TO A SMOOTH UNIFORM GRADE PRIOR TO FINISHED SURFACE APPLICATION.

17. THE AREAS OF THE OWNERS PROPERTY DISTURBED BY THE WORK AND NOT COVERED BY THE TOWER, EQUIPMENT OR DRIVEWAY, SHALL BE GRADED TO A UNIFORM SLOPE, AND STABILIZED TO PREVENT EROSION AS SPECIFIED ON THE CONSTRUCTION DRAWINGS AND/OR PROJECT SPECIFICATIONS.

18. CONTRACTOR SHALL MINIMIZE DISTURBANCE TO EXISTING SITE DURING CONSTRUCTION. EROSION CONTROL MEASURES, IF REQUIRED DURING CONSTRUCTION, SHALL BE IN CONFORMANCE WITH THE LOCAL GUIDELINES FOR EROSION AND SEDIMENT CONTROL.

19. THE CONTRACTOR SHALL PROTECT EXISTING IMPROVEMENTS, PAVEMENTS, CURBS, LANDSCAPING AND STRUCTURES. ANY DAMAGED PART SHALL BE REPAIRED AT CONTRACTOR'S EXPENSE TO THE SATISFACTION OF OWNER.

20. CONTRACTOR SHALL LEGALLY AND PROPERLY DISPOSE OF ALL SCRAP MATERIALS SUCH AS COAXIAL CABLES AND OTHER ITEMS REMOVED FROM THE EXISTING FACILITY. ANTENNAS AND RADIOS REMOVED SHALL BE RETURNED TO THE OWNER'S DESIGNATED LOCATION.

21. CONTRACTOR SHALL LEAVE PREMISES IN CLEAN CONDITION. TRASH AND DEBRIS SHOULD BE REMOVED FROM SITE ON A DAILY BASIS.

22. NO FILL OR EMBANKMENT MATERIAL SHALL BE PLACED ON FROZEN GROUND. FROZEN MATERIALS, SNOW OR ICE SHALL NOT BE PLACED IN ANY FILL OR EMBANKMENT.

GENERAL NOTES:

1.FOR THE PURPOSE OF CONSTRUCTION DRAWING, THE FOLLOWING DEFINITIONS SHALL APPLY:

CONTRACTOR:GENERAL CONTRACTOR RESPONSIBLE FOR CONSTRUCTION

CARRIER:DISH Wireless L.L.C.

TOWER OWNER:TOWER OWNER

2. THESE DRAWINGS HAVE BEEN PREPARED USING STANDARDS OF PROFESSIONAL CARE AND COMPLETENESS NORMALLY EXERCISED UNDER SIMILAR CIRCUMSTANCES BY REPUTABLE ENGINEERS IN THIS OR SIMILAR LOCALITIES. IT IS ASSUMED THAT THE WORK DEPICTED WILL BE PERFORMED BY AN EXPERIENCED CONTRACTOR AND/OR WORKPEOPLE WHO HAVE A WORKING KNOWLEDGE OF THE APPLICABLE CODE STANDARDS AND REQUIREMENTS AND OF INDUSTRY ACCEPTED STANDARD GOOD PRACTICE. AS NOT EVERY CONDITION OR ELEMENT IS (OR CAN BE) EXPLICITLY SHOWN ON THESE DRAWINGS, THE CONTRACTOR SHALL USE INDUSTRY ACCEPTED STANDARD GOOD PRACTICE FOR MISCELLANEOUS WORK NOT EXPLICITLY SHOWN.

3. THESE DRAWINGS REPRESENT THE FINISHED STRUCTURE. THEY DO NOT INDICATE THE MEANS OR METHODS OF CONSTRUCTION. THE CONTRACTOR SHALL BE SOLELY RESPONSIBLE FOR THE CONSTRUCTION MEANS, METHODS, TECHNIQUES, SEQUENCES, AND PROCEDURES. THE CONTRACTOR SHALL PROVIDE ALL MEASURES NECESSARY FOR PROTECTION OF LIFE AND PROPERTY DURING CONSTRUCTION. SUCH MEASURES SHALL INCLUDE, BUT NOT BE LIMITED TO, BRACING, FORMWORK, SHORING, ETC. SITE VISITS BY THE ENGINEER OR HIS REPRESENTATIVE WILL NOT INCLUDE INSPECTION OF THESE ITEMS AND IS FOR STRUCTURAL OBSERVATION OF THE FINISHED STRUCTURE ONLY.

4. NOTES AND DETAILS IN THE CONSTRUCTION DRAWINGS SHALL TAKE PRECEDENCE OVER GENERAL NOTES AND TYPICAL DETAILS. WHERE NO DETAILS ARE SHOWN, CONSTRUCTION SHALL CONFORM TO SIMILAR WORK ON THE PROJECT, AND/OR AS PROVIDED FOR IN THE CONTRACT DOCUMENTS. WHERE DISCREPANCIES OCCUR BETWEEN PLANS, DETAILS, GENERAL NOTES, AND SPECIFICATIONS, THE GREATER, MORE STRICT REQUIREMENTS, SHALL GOVERN. IF FURTHER CLARIFICATION IS REQUIRED CONTACT THE ENGINEER OF RECORD.

5. SUBSTANTIAL EFFORT HAS BEEN MADE TO PROVIDE ACCURATE DIMENSIONS AND MEASUREMENTS ON THE DRAWINGS TO ASSIST IN THE FABRICATION AND/OR PLACEMENT OF CONSTRUCTION ELEMENTS BUT IT IS THE SOLE RESPONSIBILITY OF THE CONTRACTOR TO FIELD VERIFY THE DIMENSIONS, MEASUREMENTS, AND/OR CLEARANCES SHOWN IN THE CONSTRUCTION DRAWINGS PRIOR TO FABRICATION OR CUTTING OF ANY NEW OR EXISTING CONSTRUCTION ELEMENTS. IF IT IS DETERMINED THAT THERE ARE DISCREPANCIES AND/OR CONFLICTS WITH THE CONSTRUCTION DRAWINGS THE ENGINEER OF RECORD IS TO BE NOTIFIED AS SOON AS POSSIBLE.

6. PRIOR TO THE SUBMISSION OF BIDS, THE BIDDING CONTRACTOR SHALL VISIT THE CELL SITE TO FAMILIARIZE WITH THE EXISTING CONDITIONS AND TO CONFIRM THAT THE WORK CAN BE ACCOMPLISHED AS SHOWN ON THE CONSTRUCTION DRAWINGS. ANY DISCREPANCY FOUND SHALL BE BROUGHT TO THE ATTENTION OF CARRIER POC AND TOWER OWNER.

7. ALL MATERIALS FURNISHED AND INSTALLED SHALL BE IN STRICT ACCORDANCE WITH ALL APPLICABLE CODES, REGULATIONS AND ORDINANCES. CONTRACTOR SHALL ISSUE ALL APPROPRIATE NOTICES AND COMPLY WITH ALL LAWS, ORDINANCES, RULES, REGULATIONS AND LAWFUL ORDERS OF ANY PUBLIC AUTHORITY REGARDING THE PERFORMANCE OF THE WORK. ALL WORK CARRIED OUT SHALL COMPLY WITH ALL APPLICABLE MUNICIPAL AND UTILITY COMPANY SPECIFICATIONS AND LOCAL JURISDICTIONAL CODES, ORDINANCES AND APPLICABLE REGULATIONS.

8. UNLESS NOTED OTHERWISE, THE WORK SHALL INCLUDE FURNISHING MATERIALS, EQUIPMENT, APPURTENANCES AND LABOR NECESSARY TO COMPLETE ALL INSTALLATIONS AS INDICATED ON THE DRAWINGS.

9. THE CONTRACTOR SHALL INSTALL ALL EQUIPMENT AND MATERIALS IN ACCORDANCE WITH MANUFACTURER'S RECOMMENDATIONS UNLESS SPECIFICALLY STATED OTHERWISE.

10. IF THE SPECIFIED EQUIPMENT CAN NOT BE INSTALLED AS SHOWN ON THESE DRAWINGS, THE CONTRACTOR SHALL PROPOSE AN ALTERNATIVE INSTALLATION FOR APPROVAL BY THE CARRIER AND TOWER OWNER PRIOR TO PROCEEDING WITH ANY SUCH CHANGE OF INSTALLATION.

11. CONTRACTOR IS TO PERFORM A SITE INVESTIGATION, BEFORE SUBMITTING BIDS, TO DETERMINE THE BEST ROUTING OF ALL CONDUITS FOR POWER, AND TELCO AND FOR GROUNDING CABLES AS SHOWN IN THE POWER, TELCO, AND GROUNDING PLAN DRAWINGS.

12. THE CONTRACTOR SHALL PROTECT EXISTING IMPROVEMENTS, PAVEMENTS, CURBS, LANDSCAPING AND STRUCTURES. ANY DAMAGED PART SHALL BE REPAIRED AT CONTRACTOR'S EXPENSE TO THE SATISFACTION OF DISH Wireless L.L.C. AND TOWER OWNER

13. CONTRACTOR SHALL LEGALLY AND PROPERLY DISPOSE OF ALL SCRAP MATERIALS SUCH AS COAXIAL CABLES AND OTHER ITEMS REMOVED FROM THE EXISTING FACILITY. ANTENNAS REMOVED SHALL BE RETURNED TO THE OWNER'S DESIGNATED LOCATION.

14. CONTRACTOR SHALL LEAVE PREMISES IN CLEAN CONDITION. TRASH AND DEBRIS SHOULD BE REMOVED FROM SITE ON A DAILY BASIS.

INFINIGY ENGINEERING PLLC
LICENSE # 184005973-0002

dish wireless.
5701 SOUTH SANTA FE DRIVE
LITTLETON, CO 80120

CROWN CASTLE
2000 CORPORATE DRIVE
CANONSBURG, PA 15317

INFINIGY
FROM ZERO TO INFINIGY
the solutions are endless
2500 W. HIGGINS RD. SUITE 500 | HOFFMAN ESTATES, IL 60169
PHONE: 847-648-4068 | FAX: 518-690-0793
WWW.INFINIGY.COM

IT IS A VIOLATION OF LAW FOR ANY PERSON, UNLESS THEY ARE ACTING UNDER THE DIRECTION OF A LICENSED PROFESSIONAL ENGINEER, TO ALTER THIS DOCUMENT.

DRAWN BY:	CHECKED BY:	APPROVED BY:
RCD	SS	CJW

RFDS REV #: N/A

CONSTRUCTION DOCUMENTS

SUBMITTALS

REV	DATE	DESCRIPTION
A	07/14/2021	ISSUED FOR REVIEW
0	03/04/2022	ISSUED FOR CONSTRUCTION
1	12/12/2022	ISSUED FOR CONSTRUCTION
2	01/30/2023	ISSUED FOR CONSTRUCTION

A&E PROJECT NUMBER
6039–Z0001–C

DISH Wireless L.L.C.
PROJECT INFORMATION

CHCHI00216A
415 TAFT AVE
GLEN ELLYN, IL 60137

SHEET TITLE
GENERAL NOTES

SHEET NUMBER
GN-2

CONCRETE, FOUNDATIONS, AND REINFORCING STEEL:

1. ALL CONCRETE WORK SHALL BE IN ACCORDANCE WITH THE ACI 301, ACI 318, ACI 336, ASTM A184, ASTM A185 AND THE DESIGN AND CONSTRUCTION SPECIFICATION FOR CAST-IN-PLACE CONCRETE.

2. UNLESS NOTED OTHERWISE, SOIL BEARING PRESSURE USED FOR DESIGN OF SLABS AND FOUNDATIONS IS ASSUMED TO BE 1000 psf.

3. ALL CONCRETE SHALL HAVE A MINIMUM COMPRESSIVE STRENGTH (f'c) OF 3000 psi AT 28 DAYS, UNLESS NOTED OTHERWISE. NO MORE THAN 90 MINUTES SHALL ELAPSE FROM BATCH TIME TO TIME OF PLACEMENT UNLESS APPROVED BY THE ENGINEER OF RECORD. TEMPERATURE OF CONCRETE SHALL NOT EXCEED 90°f AT TIME OF PLACEMENT.

4. CONCRETE EXPOSED TO FREEZE-THAW CYCLES SHALL CONTAIN AIR ENTRAINING ADMIXTURES. AMOUNT OF AIR ENTRAINMENT TO BE BASED ON SIZE OF AGGREGATE AND F3 CLASS EXPOSURE (VERY SEVERE). CEMENT USED TO BE TYPE II PORTLAND CEMENT WITH A MAXIMUM WATER-TO-CEMENT RATIO (W/C) OF 0.45.

5. ALL STEEL REINFORCING SHALL CONFORM TO ASTM A615. ALL WELDED WIRE FABRIC (WWF) SHALL CONFORM TO ASTM A185. ALL SPLICES SHALL BE CLASS "B" TENSION SPLICES, UNLESS NOTED OTHERWISE. ALL HOOKS SHALL BE STANDARD 90 DEGREE HOOKS, UNLESS NOTED OTHERWISE. YIELD STRENGTH (Fy) OF STANDARD DEFORMED BARS ARE AS FOLLOWS:

#4 BARS AND SMALLER 40 ksi

#5 BARS AND LARGER 60 ksi

6. THE FOLLOWING MINIMUM CONCRETE COVER SHALL BE PROVIDED FOR REINFORCING STEEL UNLESS SHOWN OTHERWISE ON DRAWINGS:

- CONCRETE CAST AGAINST AND PERMANENTLY EXPOSED TO EARTH 3"
- CONCRETE EXPOSED TO EARTH OR WEATHER:
- #6 BARS AND LARGER 2"
- #5 BARS AND SMALLER 1-1/2"
- CONCRETE NOT EXPOSED TO EARTH OR WEATHER:
- SLAB AND WALLS 3/4"
- BEAMS AND COLUMNS 1-1/2"

7. A TOOLED EDGE OR A 3/4" CHAMFER SHALL BE PROVIDED AT ALL EXPOSED EDGES OF CONCRETE, UNLESS NOTED OTHERWISE, IN ACCORDANCE WITH ACI 301 SECTION 4.2.4.

ELECTRICAL INSTALLATION NOTES:

1. ALL ELECTRICAL WORK SHALL BE PERFORMED IN ACCORDANCE WITH THE PROJECT SPECIFICATIONS, NEC AND ALL APPLICABLE FEDERAL, STATE, AND LOCAL CODES/ORDINANCES.

2. CONDUIT ROUTINGS ARE SCHEMATIC. CONTRACTOR SHALL INSTALL CONDUITS SO THAT ACCESS TO EQUIPMENT IS NOT BLOCKED AND TRIP HAZARDS ARE ELIMINATED.

3. WIRING, RACEWAY AND SUPPORT METHODS AND MATERIALS SHALL COMPLY WITH THE REQUIREMENTS OF THE NEC.

4. ALL CIRCUITS SHALL BE SEGREGATED AND MAINTAIN MINIMUM CABLE SEPARATION AS REQUIRED BY THE NEC.

4.1. ALL EQUIPMENT SHALL BEAR THE UNDERWRITERS LABORATORIES LABEL OF APPROVAL, AND SHALL CONFORM TO REQUIREMENT OF THE NATIONAL ELECTRICAL CODE.

4.2. ALL OVERCURRENT DEVICES SHALL HAVE AN INTERRUPTING CURRENT RATING THAT SHALL BE GREATER THAN THE SHORT CIRCUIT CURRENT TO WHICH THEY ARE SUBJECTED, 22,000 AIC MINIMUM. VERIFY AVAILABLE SHORT CIRCUIT CURRENT DOES NOT EXCEED THE RATING OF ELECTRICAL EQUIPMENT IN ACCORDANCE WITH ARTICLE 110.24 NEC OR THE MOST CURRENT ADOPTED CODE PRE THE GOVERNING JURISDICTION.

5. EACH END OF EVERY POWER PHASE CONDUCTOR, GROUNDING CONDUCTOR, AND TELCO CONDUCTOR OR CABLE SHALL BE LABELED WITH COLOR-CODED INSULATION OR ELECTRICAL TAPE (3M BRAND, 1/2" PLASTIC ELECTRICAL TAPE WITH UV PROTECTION, OR EQUAL). THE IDENTIFICATION METHOD SHALL CONFORM WITH NEC AND OSHA.

6. ALL ELECTRICAL COMPONENTS SHALL BE CLEARLY LABELED WITH LAMICOID TAGS SHOWING THEIR RATED VOLTAGE, PHASE CONFIGURATION, WIRE CONFIGURATION, POWER OR AMPACITY RATING AND BRANCH CIRCUIT ID NUMBERS (i.e. PANEL BOARD AND CIRCUIT ID'S).

7. PANEL BOARDS (ID NUMBERS) SHALL BE CLEARLY LABELED WITH PLASTIC LABELS.

8. TIE WRAPS ARE NOT ALLOWED.

9. ALL POWER AND EQUIPMENT GROUND WIRING IN TUBING OR CONDUIT SHALL BE SINGLE COPPER CONDUCTOR (#14 OR LARGER) WITH TYPE THHW, THWN, THWN-2, XHHW, XHHW-2, THW, THW-2, RHW, OR RHW-2 INSULATION UNLESS OTHERWISE SPECIFIED.

10. SUPPLEMENTAL EQUIPMENT GROUND WIRING LOCATED INDOORS SHALL BE SINGLE COPPER CONDUCTOR (#6 OR LARGER) WITH TYPE THHW, THWN, THWN-2, XHHW, XHHW-2, THW, THW-2, RHW, OR RHW-2 INSULATION UNLESS OTHERWISE SPECIFIED.

11. POWER AND CONTROL WIRING IN FLEXIBLE CORD SHALL BE MULTI-CONDUCTOR, TYPE SOOW CORD (#14 OR LARGER) UNLESS OTHERWISE SPECIFIED.

12. POWER AND CONTROL WIRING FOR USE IN CABLE TRAY SHALL BE MULTI-CONDUCTOR, TYPE TC CABLE (#14 OR LARGER), WITH TYPE THHW, THWN, THWN-2, XHHW, XHHW-2, THW, THW-2, RHW, OR RHW-2 INSULATION UNLESS OTHERWISE SPECIFIED.

13. ALL POWER AND GROUNDING CONNECTIONS SHALL BE CRIMP-STYLE, COMPRESSION WIRE LUGS AND WIRE NUTS BY THOMAS AND BETTS (OR EQUAL). LUGS AND WIRE NUTS SHALL BE RATED FOR OPERATION NOT LESS THAN 75° C (90° C IF AVAILABLE).

14. RACEWAY AND CABLE TRAY SHALL BE LISTED OR LABELED FOR ELECTRICAL USE IN ACCORDANCE WITH NEMA, UL, ANSI/IEEE AND NEC.

15. ELECTRICAL METALLIC TUBING (EMT), INTERMEDIATE METAL CONDUIT (IMC), OR RIGID METAL CONDUIT (RMC) SHALL BE USED FOR EXPOSED INDOOR LOCATIONS.

16. ELECTRICAL METALLIC TUBING (EMT) OR METAL-CLAD CABLE (MC) SHALL BE USED FOR CONCEALED INDOOR LOCATIONS.

17. SCHEDULE 40 PVC UNDERGROUND ON STRAIGHTS AND SCHEDULE 80 PVC FOR ALL ELBOWS/90s AND ALL APPROVED ABOVE GRADE PVC CONDUIT.

18. LIQUID-TIGHT FLEXIBLE METALLIC CONDUIT (LIQUID-TITE FLEX) SHALL BE USED INDOORS AND OUTDOORS, WHERE VIBRATION OCCURS OR FLEXIBILITY IS NEEDED.

19. CONDUIT AND TUBING FITTINGS SHALL BE THREADED OR COMPRESSION-TYPE AND APPROVED FOR THE LOCATION USED. SET SCREW FITTINGS ARE NOT ACCEPTABLE.

20. CABINETS, BOXES AND WIRE WAYS SHALL BE LABELED FOR ELECTRICAL USE IN ACCORDANCE WITH NEMA, UL, ANSI/IEEE AND THE NEC.

21. WIREWAYS SHALL BE METAL WITH AN ENAMEL FINISH AND INCLUDE A HINGED COVER, DESIGNED TO SWING OPEN DOWNWARDS (WIREMOLD SPECMATE WIREWAY).

22. SLOTTED WIRING DUCT SHALL BE PVC AND INCLUDE COVER (PANDUIT TYPE E OR EQUAL).

23. CONDUITS SHALL BE FASTENED SECURELY IN PLACE WITH APPROVED NON-PERFORATED STRAPS AND HANGERS. EXPLOSIVE DEVICES (i.e. POWDER-ACTUATED) FOR ATTACHING HANGERS TO STRUCTURE WILL NOT BE PERMITTED. CLOSELY FOLLOW THE LINES OF THE STRUCTURE, MAINTAIN CLOSE PROXIMITY TO THE STRUCTURE AND KEEP CONDUITS IN TIGHT ENVELOPES. CHANGES IN DIRECTION TO ROUTE AROUND OBSTACLES SHALL BE MADE WITH CONDUIT OUTLET BODIES. CONDUIT SHALL BE INSTALLED IN A NEAT AND WORKMANLIKE MANNER. PARALLEL AND PERPENDICULAR TO STRUCTURE WALL AND CEILING LINES. ALL CONDUIT SHALL BE FISHED TO CLEAR OBSTRUCTIONS. ENDS OF CONDUITS SHALL BE TEMPORARILY CAPPED FLUSH TO FINISH GRADE TO PREVENT CONCRETE, PLASTER OR DIRT FROM ENTERING. CONDUITS SHALL BE RIGIDLY CLAMPED TO BOXES BY GALVANIZED MALLEABLE IRON BUSHING ON INSIDE AND GALVANIZED MALLEABLE IRON LOCKNUT ON OUTSIDE AND INSIDE.

24. EQUIPMENT CABINETS, TERMINAL BOXES, JUNCTION BOXES AND PULL BOXES SHALL BE GALVANIZED OR EPOXY-COATED SHEET STEEL. SHALL MEET OR EXCEED UL 50 AND BE RATED NEMA 1 (OR BETTER) FOR INTERIOR LOCATIONS AND NEMA 3 (OR BETTER) FOR EXTERIOR LOCATIONS.

25. METAL RECEPTACLE, SWITCH AND DEVICE BOXES SHALL BE GALVANIZED, EPOXY-COATED OR NON-CORRODING; SHALL MEET OR EXCEED UL 514A AND NEMA OS 1 AND BE RATED NEMA 1 (OR BETTER) FOR INTERIOR LOCATIONS AND WEATHER PROTECTED (WP OR BETTER) FOR EXTERIOR LOCATIONS.

26. NONMETALLIC RECEPTACLE, SWITCH AND DEVICE BOXES SHALL MEET OR EXCEED NEMA OS 2 (NEWEST REVISION) AND BE RATED NEMA 1 (OR BETTER) FOR INTERIOR LOCATIONS AND WEATHER PROTECTED (WP OR BETTER) FOR EXTERIOR LOCATIONS.

27. THE CONTRACTOR SHALL NOTIFY AND OBTAIN NECESSARY AUTHORIZATION FROM THE CARRIER AND/OR DISH Wireless L.L.C. AND TOWER OWNER BEFORE COMMENCING WORK ON THE AC POWER DISTRIBUTION PANELS.

28. THE CONTRACTOR SHALL PROVIDE NECESSARY TAGGING ON THE BREAKERS, CABLES AND DISTRIBUTION PANELS IN ACCORDANCE WITH THE APPLICABLE CODES AND STANDARDS TO SAFEGUARD LIFE AND PROPERTY.

29. INSTALL LAMICOID LABEL ON THE METER CENTER TO SHOW "DISH Wireless L.L.C.".

30. ALL EMPTY/SPARE CONDUITS THAT ARE INSTALLED ARE TO HAVE A METERED MULE TAPE PULL CORD INSTALLED.

INFINIGY ENGINEERING PLLC
LICENSE # 184005973-0002

5701 SOUTH SANTA FE DRIVE
LITTLETON, CO 80120

CROWN CASTLE
2000 CORPORATE DRIVE
CANONSBURG, PA 15317

INFINIGY
FROM ZERO TO INFINIGY
the solutions are endless
2500 W. HIGGINS RD. SUITE 500 | HOFFMAN ESTATES, IL 60169
PHONE: 847-648-4068 | FAX: 518-690-0793
WWW.INFINIGY.COM

IT IS A VIOLATION OF LAW FOR ANY PERSON, UNLESS THEY ARE ACTING UNDER THE DIRECTION OF A LICENSED PROFESSIONAL ENGINEER, TO ALTER THIS DOCUMENT.

DRAWN BY:	CHECKED BY:	APPROVED BY:
RCD	SS	CJW

RFDS REV #: N/A

CONSTRUCTION DOCUMENTS

SUBMITTALS

REV	DATE	DESCRIPTION
A	07/14/2021	ISSUED FOR REVIEW
0	03/04/2022	ISSUED FOR CONSTRUCTION
1	12/12/2022	ISSUED FOR CONSTRUCTION
2	01/30/2023	ISSUED FOR CONSTRUCTION

A&E PROJECT NUMBER
6039-Z0001-C

DISH Wireless L.L.C.
PROJECT INFORMATION

CHCHI00216A
415 TAFT AVE
GLEN ELLYN, IL 60137

SHEET TITLE
GENERAL NOTES

SHEET NUMBER
GN-3

GROUNDING NOTES:

1. ALL GROUND ELECTRODE SYSTEMS (INCLUDING TELECOMMUNICATION, RADIO, LIGHTNING PROTECTION AND AC POWER GES'S) SHALL BE BONDED TOGETHER AT OR BELOW GRADE, BY TWO OR MORE COPPER BONDING CONDUCTORS IN ACCORDANCE WITH THE NEC.

2. THE CONTRACTOR SHALL PERFORM IEEE FALL-OF-POTENTIAL RESISTANCE TO EARTH TESTING (PER IEEE 1100 AND 81) FOR GROUND ELECTRODE SYSTEMS, THE CONTRACTOR SHALL FURNISH AND INSTALL SUPPLEMENTAL GROUND ELECTRODES AS NEEDED TO ACHIEVE A TEST RESULT OF 5 OHMS OR LESS.

3. THE CONTRACTOR IS RESPONSIBLE FOR PROPERLY SEQUENCING GROUNDING AND UNDERGROUND CONDUIT INSTALLATION AS TO PREVENT ANY LOSS OF CONTINUITY IN THE GROUNDING SYSTEM OR DAMAGE TO THE CONDUIT AND PROVIDE TESTING RESULTS.

4. METAL CONDUIT AND TRAY SHALL BE GROUNDED AND MADE ELECTRICALLY CONTINUOUS WITH LISTED BONDING FITTINGS OR BY BONDING ACROSS THE DISCONTINUITY WITH #6 COPPER WIRE UL APPROVED GROUNDING TYPE CONDUIT CLAMPS.

5. METAL RACEWAY SHALL NOT BE USED AS THE NEC REQUIRED EQUIPMENT GROUND CONDUCTOR. STRANDED COPPER CONDUCTORS WITH GREEN INSULATION, SIZED IN ACCORDANCE WITH THE NEC, SHALL BE FURNISHED AND INSTALLED WITH THE POWER CIRCUITS TO BTS EQUIPMENT.

6. EACH CABINET FRAME SHALL BE DIRECTLY CONNECTED TO THE MASTER GROUND BAR WITH GREEN INSULATED SUPPLEMENTAL EQUIPMENT GROUND WIRES, #6 STRANDED COPPER OR LARGER FOR INDOOR BTS; #2 BARE SOLID TINNED COPPER FOR OUTDOOR BTS.

7. CONNECTIONS TO THE GROUND BUS SHALL NOT BE DOUBLED UP OR STACKED BACK TO BACK CONNECTIONS ON OPPOSITE SIDE OF THE GROUND BUS ARE PERMITTED.

8. ALL EXTERIOR GROUND CONDUCTORS BETWEEN EQUIPMENT/GROUND BARS AND THE GROUND RING SHALL BE #2 SOLID TINNED COPPER UNLESS OTHERWISE INDICATED.

9. ALUMINUM CONDUCTOR OR COPPER CLAD STEEL CONDUCTOR SHALL NOT BE USED FOR GROUNDING CONNECTIONS.

10. USE OF 90° BENDS IN THE PROTECTION GROUNDING CONDUCTORS SHALL BE AVOIDED WHEN 45° BENDS CAN BE ADEQUATELY SUPPORTED.

11. EXOTHERMIC WELDS SHALL BE USED FOR ALL GROUNDING CONNECTIONS BELOW GRADE.

12. ALL GROUND CONNECTIONS ABOVE GRADE (INTERIOR AND EXTERIOR) SHALL BE FORMED USING HIGH PRESS CRIMPS.

13. COMPRESSION GROUND CONNECTIONS MAY BE REPLACED BY EXOTHERMIC WELD CONNECTIONS.

14. ICE BRIDGE BONDING CONDUCTORS SHALL BE EXOTHERMICALLY BONDED OR BOLTED TO THE BRIDGE AND THE TOWER GROUND BAR.

15. APPROVED ANTIOXIDANT COATINGS (i.e. CONDUCTIVE GEL OR PASTE) SHALL BE USED ON ALL COMPRESSION AND BOLTED GROUND CONNECTIONS.

16. ALL EXTERIOR GROUND CONNECTIONS SHALL BE COATED WITH A CORROSION RESISTANT MATERIAL.

17. MISCELLANEOUS ELECTRICAL AND NON-ELECTRICAL METAL BOXES, FRAMES AND SUPPORTS SHALL BE BONDED TO THE GROUND RING, IN ACCORDANCE WITH THE NEC.

18. BOND ALL METALLIC OBJECTS WITHIN 6 ft OF MAIN GROUND RING WITH (1) #2 BARE SOLID TINNED COPPER GROUND CONDUCTOR.

19. GROUND CONDUCTORS USED FOR THE FACILITY GROUNDING AND LIGHTNING PROTECTION SYSTEMS SHALL NOT BE ROUTED THROUGH METALLIC OBJECTS THAT FORM A RING AROUND THE CONDUCTOR, SUCH AS METALLIC CONDUITS, METAL SUPPORT CLIPS OR SLEEVES THROUGH WALLS OR FLOORS. WHEN IT IS REQUIRED TO BE HOUSED IN CONDUIT TO MEET CODE REQUIREMENTS OR LOCAL CONDITIONS, NON-METALLIC MATERIAL SUCH AS PVC CONDUIT SHALL BE USED. WHERE USE OF METAL CONDUIT IS UNAVOIDABLE (i.e., NONMETALLIC CONDUIT PROHIBITED BY LOCAL CODE) THE GROUND CONDUCTOR SHALL BE BONDED TO EACH END OF THE METAL CONDUIT.

20. ALL GROUNDS THAT TRANSITION FROM BELOW GRADE TO ABOVE GRADE MUST BE #2 BARE SOLID TINNED COPPER IN 3/4" NON-METALLIC, FLEXIBLE CONDUIT FROM 24" BELOW GRADE TO WITHIN 3" TO 6" OF CAD-WELD TERMINATION POINT. THE EXPOSED END OF THE CONDUIT MUST BE SEALED WITH SILICONE CAULK. (ADD TRANSITIONING GROUND STANDARD DETAIL AS WELL).

21. BUILDINGS WHERE THE MAIN GROUNDING CONDUCTORS ARE REQUIRED TO BE ROUTED TO GRADE, THE CONTRACTOR SHALL ROUTE TWO GROUNDING CONDUCTORS FROM THE ROOFTOP, TOWERS, AND WATER TOWERS GROUNDING RING, TO THE EXISTING GROUNDING SYSTEM, THE GROUNDING CONDUCTORS SHALL NOT BE SMALLER THAN 2/0 COPPER. ROOFTOP GROUNDING RING SHALL BE BONDED TO THE EXISTING GROUNDING SYSTEM, THE BUILDING STEEL COLUMNS, LIGHTNING PROTECTION SYSTEM, AND BUILDING MAIN WATER LINE (FERROUS OR NONFERROUS METAL PIPING ONLY). DO NOT ATTACH GROUNDING TO FIRE SPRINKLER SYSTEM PIPES.

INFINIGY ENGINEERING PLLC
LICENSE # 184005973-0002

dish wireless.
5701 SOUTH SANTA FE DRIVE
LITTLETON, CO 80120

CROWN CASTLE
2000 CORPORATE DRIVE
CANONSBURG, PA 15317

INFINIGY
FROM ZERO TO INFINIGY
the solutions are endless
2500 W. HIGGINS RD. SUITE 500 |
HOFFMAN ESTATES, IL 60169
PHONE: 847-648-4068 | FAX: 518-690-0793
WWW.INFINIGY.COM

IT IS A VIOLATION OF LAW FOR ANY PERSON, UNLESS THEY ARE ACTING UNDER THE DIRECTION OF A LICENSED PROFESSIONAL ENGINEER, TO ALTER THIS DOCUMENT.

DRAWN BY:	CHECKED BY:	APPROVED BY:
RCD	SS	CJW

RFDS REV #: N/A

CONSTRUCTION DOCUMENTS

SUBMITTALS

REV	DATE	DESCRIPTION
A	07/14/2021	ISSUED FOR REVIEW
0	03/04/2022	ISSUED FOR CONSTRUCTION
1	12/12/2022	ISSUED FOR CONSTRUCTION
2	01/30/2023	ISSUED FOR CONSTRUCTION

A&E PROJECT NUMBER
6039-Z0001-C

DISH Wireless L.L.C.
PROJECT INFORMATION

CHCHI00216A
415 TAFT AVE
GLEN ELLYN, IL 60137

SHEET TITLE
GENERAL NOTES

SHEET NUMBER
GN-4

BOUNDARY SURVEY

OF LEASE PARCEL
POTION OF TAX P.I.N. 05-23-102-018-0000
VILLAGE OF GLEN ELLYN, ILLINOIS
FOR: PINNACLE TOWERS INC.

VICINITY MAP
NOT TO SCALE

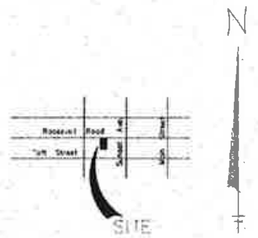

PARENT PARCEL LEGAL DESCRIPTION:

LOT 9 AND THE WEST ½ OF VACATED ALLEY LYING EAST OF AND ADJOINING AND LOT 10 IN BLOCK 79 IN WHEATON ESTATES, BEING A SUBDIVISION IN SECTION 22 AND 23, TOWNSHIP 39 NORTH, RANGE 10, EAST OF THE THIRD PRINCIPAL MERIDIAN, ACCORDING TO THE PLAT THEREOF RECORDED AUGUST 7, 1925, AS DOCUMENT 197514, IN DUPAGE COUNTY, ILLINOIS.

TOWER PARCEL LEGAL DESCRIPTION:

THE SOUTH 29.92 FEET OF LOT 9 AND THE SOUTH 29.92 FEET OF THE WEST ½ OF VACATED ALLEY LYING EAST OF AND ADJOINING SAID LOT 9 AND THE SOUTH 29.92 FEET OF LOT 10 IN BLOCK 79 IN WHEATON ESTATES, BEING A SUBDIVISION IN SECTION 22 AND SECTION 23, TOWNSHIP 39 NORTH, RANGE 10, EAST OF THE THIRD PRINCIPAL MERIDIAN, ACCORDING TO THE PLAT THEREOF RECORDED AUGUST 7, 1925 AS DOCUMENT 197514, IN DUPAGE COUNTY, ILLINOIS

ACCESS EASEMENT LEGAL DESCRIPTION

THAT PART OF LOT 9 OF BLOCK 79 IN WHEATON ESTATES, BEING A SUBDIVISION IN SECTION 22 AND SECTION 23, TOWNSHIP 39 NORTH, RANGE 10, EAST OF THE THIRD PRINCIPAL MERIDIAN, ACCORDING TO THE PLAT RECORDED AUGUST 7, 1925 AS DOCUMENT 197514, BOUNDED AND DESCRIBED AS FOLLOWS: COMMENCING AT THE SOUTHEAST CORNER OF SAID LOT 9; THENCE SOUTH 89 DEGREES [illegible] MINUTES [illegible] SECONDS WEST ALONG THE SOUTH LINE OF SAID LOT 9, 16.82 FEET; THENCE NORTH 00 53 MINUTES 00 SECONDS WEST, 3.78 FEET TO [illegible] DESCRIBED LEASE AREA; THENCE NORTH 57 DEGREES 27 MINUTES 43 SECONDS WEST, ALONG THE SOUTHWESTERLY LINE OF SAID LEASE AREA, 7.00 FEET TO THE POINT OF BEGINNING; THENCE SOUTH 32 DEGREES 32 MINUTES 17 SECONDS WEST, 3.15 FEET TO THE SOUTH LINE OF SAID LOT 9; THENCE SOUTH 89 DEGREES 01 MINUTES 00 SECONDS WEST, 22.79 FEET; THENCE NORTH 00 DEGREES 13 MINUTES 56 SECONDS WEST, 5.00 FEET; THENCE NORTH 89 DEGREES 01 MINUTES 00 SECONDS EAST, 27.19 FEET; THENCE NORTH 32 DEGREES 32 MINUTES 17 SECONDS EAST, 5.46 FEET TO THE SOUTHWEST CORNER OF THE HEREON DESCRIBED LEASE AREA; THENCE SOUTH 57 DEGREES 27 MINUTES 43 SECONDS EAST, ALONG SAID SOUTHWESTERLY LINE, 5.00 FEET TO THE POINT OF BEGINNING, CONTAINING 185.35 SQUARE FEET, IN DUPAGE COUNTY.

BENCHMARK [illegible]
ELEVATION=737.39(NAVD29)
DESCRIPTION: 300 FT. WEST OF [illegible] INTERSECTION ON THE NORTH SIDE OF ILLINOIS RT. [illegible] 10.20 FT. NORTH OF THE BACK OF ACCESS CURB AND 10.50 FT. EAST OF THE BACK OF ACCESS CURB. A 10 FT. MONUMENT ESTABLISHED IN CONCRETE BASE AND SURFACE SLEEVE WITH ACCESS COVER STAMPED "DUPAGE COUNTY MAPS AND PLATS"

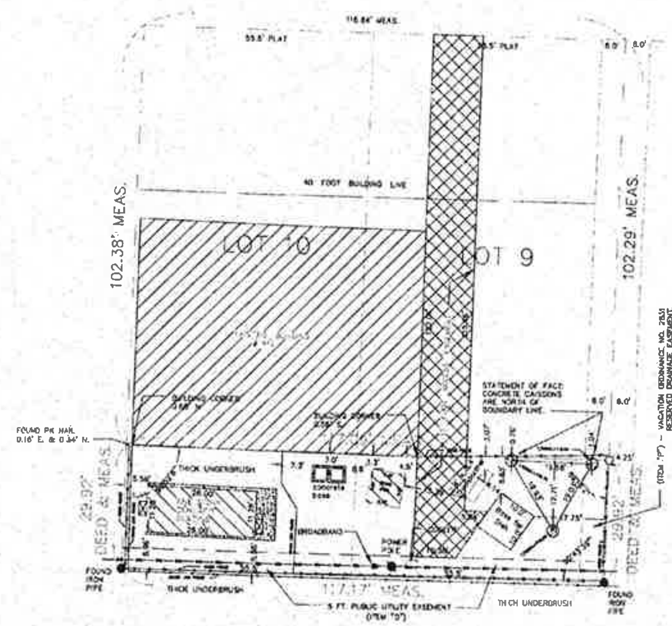

SURVEYOR'S CERTIFICATION

I, RONALD A. SHAPIRO, do hereby certify to Pinnacle Towers Acquisition LLC, Chicago Title Insurance Company and the Morgan Stanley Asset Funding, its Successors and/or Assigns. That this survey was made on the ground under my personal supervision and that this plat is a true, correct and accurate, as to the best of my knowledge and belief, representation of the facts as found at the time of the survey, and more specifically, I do hereby certify that the survey conforms to the conditions and stipulations as checked (x) below.

(X) 1. The boundary lines and dimensions of the land indicated hereon and each individual parcel thereof indicated hereon is correct.

(X) 2. To the extent the land indicated hereon is part of a parent parcel, such land is located within the boundaries of the record title legal description of such parent parcel as described and referenced on the Plat shown hereon.

(X) 3. Iron pipes are set at each property corner unless otherwise indicated hereon.

(X) 4. The distance from the nearest intersecting public street or road is as shown hereon.

(X) 5. Correctly shows the location and dimension of all alleys, streets, roads, rights-of-way, easement and other matters of record which the surveyor has been advised affects the subject property (each has been identified by instrument volume and page number if applicable).

(X) 6. Except as shown, there are no visible easements, rights-of-way, party walls or conflicts; further, this survey is not subject to any easements or rights-of-way not visible on the ground.

(X) 7. The location of all buildings, structures and other improvements of visible items, if shown, are as indicated hereon.

(X) 8. Except as shown, there are no visible protrusions on adjoining premises, streets or alleys by any building, structure or other improvements situated on the subject property.

(X) 9. Except as shown, there are no visible encroachments onto the subject property by any building, structure or other improvements situated on adjoining premises.

(X) 10. Correctly shows the location and areas contained in all portions of the subject property which are located in an area designated as a "FLOOD PRONE AREA (ZONE A)" as defined by the U.S. Department of Housing and Urban Development pursuant to the Flood Disaster Act of 1973. [illegible] Community Panel No.

(X) 11. Correctly describes and shows the location of all public streets and roads visibly providing access to and from the subject property and correctly sets forth the municipal address of the subject property.

(X) 12. Correctly shows the latitude and longitude [illegible] of the tower(s) location(s), to the nearest tenth of a second, the elevation above mean sea level of the base and tip of each tower, plus or minus 20 feet, the elevation of the tip of each tower as measured from ground level, and additionally, the elevation of the tip of the highest appurtenance on the tower as measured from ground level, if such appurtenance is higher in elevation than the highest point of the tower structure itself, to the nearest foot, on the survey drawing and on a separate 8½/2 x11 certified attached.

(X) 13. Survey meets or exceeds the minimum technical standards for Land Boundary Surveys set forth by Illinois State Law.

(X) 14. The subject property is currently zoned O-4.

(X) 15. If the survey is developed electronically (CAD file), such file has been provided to GEOLINE Surveying, Inc.

STATE OF ILLINOIS)
) SS:
COUNTY OF COOK)

"On behalf of Shapiro Surveying, P.C., I hereby certify that the above described property was surveyed under my supervision and that the annexed plat is a correct representation of said survey. This professional service conforms to the current Illinois minimum standards for a boundary survey."

Ronald A. Shapiro

RONALD A. SHAPIRO
LAND SURVEYOR – ILLINOIS #035-002708
Date of Survey: AUGUST 2, 2004
Date of Last Revision: ____________

Preliminary

SITE #6067-001
SITE
DuPage, Glen Ellyn, Illinois

SURVEY WORK PERFORMED BY:

SHAPIRO SURVEYING, P.C.
3800 S. ROBERTS ROAD
SUITE 200
PALOS HILLS, ILLINOIS, 60465
TELEPHONE: 708-430-4077
FAX: 708-598-0696
E-mail: shapirosurveying@sbcglobal.net

NATIONAL SURVEY SERVICES COORDINATION BY:

GEOLINE SURVEYING, INC.

FLOOD NOTE

According to my interpretations of Community Panel No. 170207 0005 C of the Flood Insurance Rate Maps for Glen Ellyn, DuPage County, Illinois, dated 01/22/82 the subject property is in Flood Zone "AH" areas of 100-year flood".

TOWER LOCATION INFORMATION
172.8'±1' METAL TOWER
ON 3-3.0' DIA. CONCRETE CAISSONS
LATITUDE = 41°51'29.32"± N.
LONGITUDE = -88°04'18.23"± W
ELEVATION OF GROUND AT BASE OF TOWER = 746.68'±0.1'
ELEVATION OF TOP OF TOWER = 919.46'±10'
TOP OF TOWER HEIGHT ABOVE GROUND = 172.8'±1'
HEIGHT OF TALLEST APPURTENANCE ABOVE TOP OF TOWER = 5'±1'

JOB NO. 237423

EXHIBIT A

PROFESSIONALS ASSOCIATED SURVEY, INC.

Property - Alta - Topo - Condo - Mortgage Surveys

PROFESSIONAL DESIGN FIRM REGISTRATION NO. 0011129145

7100 N. TRIPP AVENUE
LINCOLNWOOD, ILLINOIS 60712
TEL: (847) 675-3000
FAX: (847) 675-2167

PLAT OF SURVEY

OF

NORTH

LOT 9 AND WEST 1/2 OF VACATED ALLEY LYING EAST OF AND ADJOINING AND LOT 10 IN BLOCK 79 IN WHEATON ESTATES, BEING A SUBDIVISION IN SECTION 22 AND SECTION 23, TOWNSHIP 39 NORTH, RANGE 10, EAST OF THE THIRD PRINCIPAL MERIDIAN, ACCORDING TO THE PLAT THEREOF RECORDED AUGUST 7, 1925 AS DOCUMENT 197514, IN DUPAGE COUNTY, ILLINOIS.

COMMONLY KNOWN AS: 415 TAFT AVENUE, GLEN ELLYN, ILLINOIS.

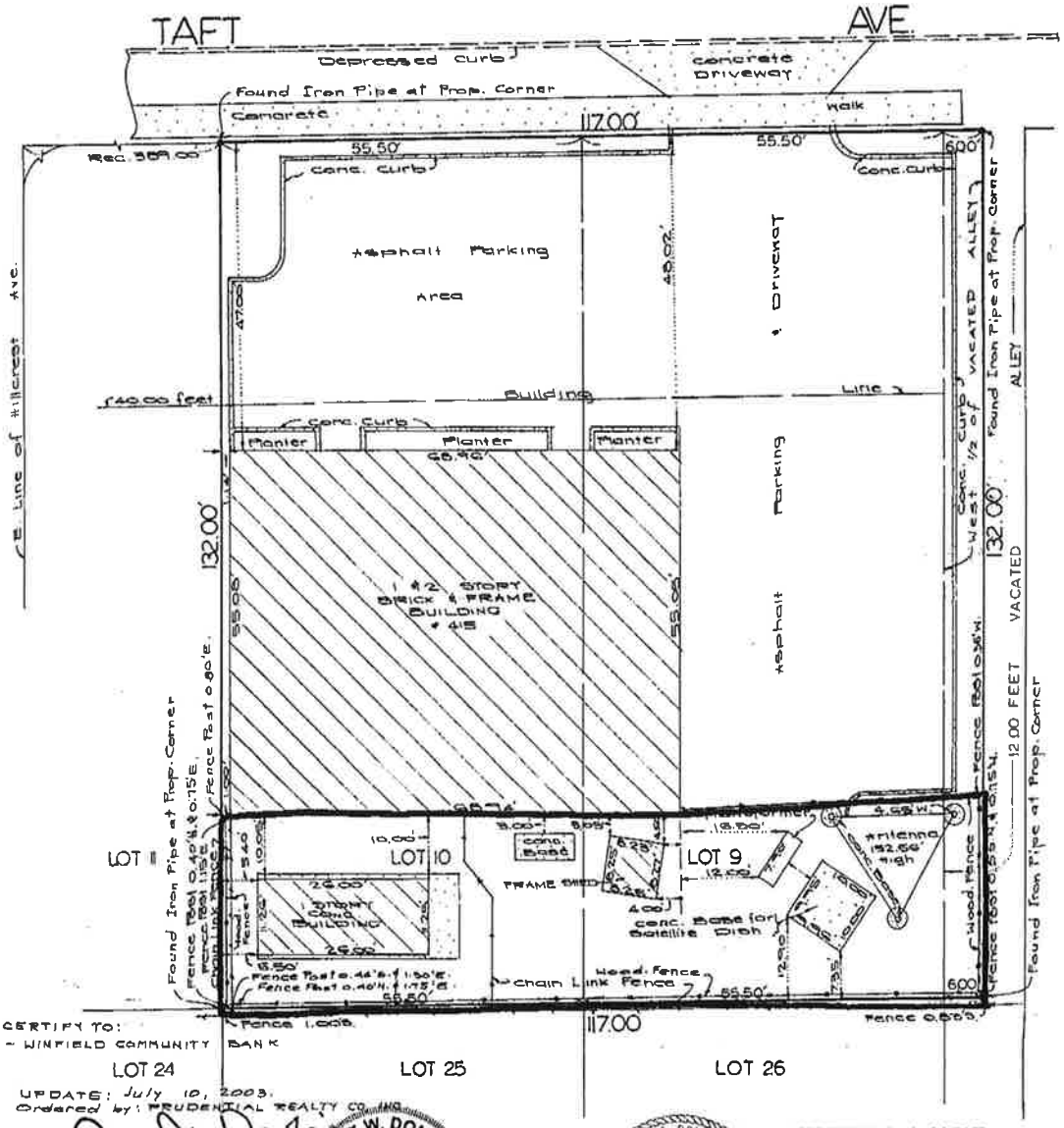

CERTIFY TO:
- WINFIELD COMMUNITY BANK

UPDATE: July 10, 2003.
Ordered by: PRUDENTIAL REALTY CO. INC.

IL. PROF. LAND SURVEYOR - LICENSE EXP. DATE NOV. 30, 2004. 35-2281

☐ CHECK (✓) IN BOX MEANS THAT SURVEY HAS BEEN MADE FOR USE IN CONNECTION WITH A REAL ESTATE OR MORTGAGE LOAN TRANSACTION AND IS NOT TO BE USED FOR CONSTRUCTION.

DIMENSIONS ARE NOT TO BE ASSUMED FROM SCALING.

BUILDING LINES AND EASEMENTS ARE SHOWN ONLY WHERE THEY ARE RECORDED IN THE MAPS. OTHERWISE REFER TO YOUR DEED OR ABSTRACT.

THIS SURVEY HAS BEEN ORDERED FOR SURFACE DIMENSIONS ONLY, NOT FOR ELEVATIONS.
THIS IS NOT AN ALTA SURVEY

PROFESSIONAL LAND SURVEYOR
State of Illinois
County of Cook

We, PROFESSIONALS ASSOCIATED, do hereby certify that we have located the building on the above property.

PROF. IL. LAND SURVEYOR

We, PROFESSIONALS ASSOCIATED, do hereby certify that we have surveyed the above described property and that the plat hereon contains a correct representation of said survey.

PROF. IL. LAND SURVEYOR

Order No. 96-37615
Scale: 1 inch = 15 feet
Date October 1, 1996
Ordered by PRUDENTIAL REALTY COMPANY

CROWN CASTLE

3025 Highland Pkwy Suite 510
Downers Grove, IL 60515

Phone: (630) 480-5164
www.crowncastle.com

February 9, 2023

Village of Glen Ellyn
Community Development Department
535 Duane Street
Glen Ellyn, IL 60137

Re: Narrative on 5G Concerns for Special Use Permit to allow the Installation and Operation of New DISH Wireless
Network Equipment to the Existing Tower at 415 Taft Ave
DISH Site CHCHI00216A / Crown Site 873681

To Whom It May Concern,

Fullerton Engineering on behalf of DISH Wireless, and Tower Owner Crown Castle, submit for review and approval, a Special Use Application for the proposed addition of DISH Wireless Antennas and Support Equipment to the telecommunications tower at 415 Taft Ave. DISH Wireless is proposing to install their telecommunication equipment on the tower and on the ground within a leased space. Crown Castle is the owner of the telecommunications tower located at this referenced tower location. Currently, there are (3) other carriers located on the tower.

DISH Wireless would install their equipment on the third space on the tower from the top for operation. This centerline for installation is located on the tower at the 126' high mark. The antenna equipment that DISH is proposing to install on the tower would support 5G technology. This is a key offering that their network would provide to their consumers. The proposed new co-location of DISH antennas does not present any detrimental effect to the community public safety, health and/or welfare. Even with the 5G capable technology that the equipment would bring to the community.

DISH Wireless is a division of the company we all know to be the satellite television provider. In recent years, DISH has become one of the major wireless carriers. Their focus will be providing 5G wireless connectivity to power the Smart Cities of the future. Smart Homes, Factories, Driverless Cars, and Artificial Intelligence...in addition to the millions of wearables, sensors, devices, and robots that will support them. Additional information regarding the DISH Story is available on their web site at https://about.dish.com/company-info.

Wireless Communications have been designated Critical Infrastructure by the Federal Government and should be considered Essential Services in all Comprehensive Plans. As DISH Wireless is constructing this new network, every new facility in the network is essential to the seamless operation. This Crown Castle tower,

CROWN CASTLE
3025 Highland Pkwy Suite 510
Downers Grove, IL 60515
Phone: (630) 480-5164
www.crowncastle.com

located at 415 Taft Ave, was selected to fill a gap in the DISH Wireless network. The tower height and location are important factors in determining how network coverage can be expanded. Structure height is key in extending that coverage. The higher the structure the farther the coverage will extend.

On the Crown Castle tower, DISH Wireless would be installing their antennas, radio equipment, and associated cabling at top location on the tower. At the base of the tower, within the fenced compound area, DISH would install an ice bridge, a 5' x 7' metal platform, and an equipment cabinet. The proposed addition of DISH Wireless's equipment will not cause an increase in the height of the tower or in the existing leased ground space.

The new antenna equipment would support 5G technology. This would be in addition to other technologies that would the DISH network would offer to consumers. As an example, another technology supported by this antenna would be 4G. There is no hazard emission that is produced from the use of 5G technology. Consumers would only be able to utilize this 5G network if they should purchase a cellular device that has 5G capable technologies.

Submitted with the Special Use Permit Application, we have included a radio frequency interference statement provided by DISH RF Engineers confirming that all frequencies utilized by DISH Wireless will follow guidelines enforced by the Federal Communications Commission. This is further confirmation the proposed new Co-location of DISH antennas does not present any detrimental effect to the community public safety, health and/or welfare. Even with the 5G technology capability provided by the new antennas.

It is also worth mentioning that the antenna equipment DISH Wireless is utilizing would be of similar make and models that other carriers are installing on their telecommunication towers to support their network. As technology improves for cellular networks there will always be the need for future equipment upgrades to DISH Wireless's network. This need would be the same for any carrier in the cellular market.

In the coming years, DISH Wireless will continue to expand their network. As mentioned previously, every new facility in the DISH network is essential to the seamless operation of this new network. This Crown Castle tower, located at 415 Taft Avenue, was selected to fill a gap in the DISH Wireless network.

The proposed addition of the DISH Wireless equipment at this location, even with the 5G technology offered by the antennas, this tower will not be hazardous to the community surrounding this property. As confirmed in the radio frequency statement provided by the DISH RF Engineering Manager, DISH Wireless shall comply with all FCC rules regarding interference to other radio services and human exposure to radio frequency energy.

CROWN CASTLE

3025 Highland Pkwy Suite 510
Downers Grove, IL 60515

Phone: (630) 480-5164
www.crowncastle.com

If there are still any outstanding questions or concerns, please feel free to reach out using any of my contact information listed below in my signature. Addressing all concerns for this project is of utmost importance to myself, and Crown Castle.

Best regards,

Ariel Stouder
Senior Zoning and Permitting Specialist
Fullerton Engineering, on behalf of Crown Castle
M: 574-849-8420
Email: astouder@fullertonengineering.com

CROWN CASTLE

3025 Highland Pkwy Suite 510
Downers Grove, IL 60515

Phone: (630) 480-5164
www.crowncastle.com

February 9, 2023

Village of Glen Ellyn
Community Development Department
535 Duane Street
Glen Ellyn, IL 60137

Re: Narrative on 5G Concerns for Special Use Permit to allow the Installation and Operation of New DISH Wireless
Network Equipment to the Existing Tower at 415 Taft Ave
DISH Site CHCHI00216A / Crown Site 873681

To Whom It May Concern,

Fullerton Engineering on behalf of DISH Wireless, and Tower Owner Crown Castle, submit for review and approval, a Special Use Application for the proposed addition of DISH Wireless Antennas and Support Equipment to the telecommunications tower at 415 Taft Ave. DISH Wireless is proposing to install their telecommunication equipment on the tower and on the ground within a leased space. Crown Castle is the owner of the telecommunications tower located at this referenced tower location. Currently, there are (3) other carriers located on the tower.

DISH Wireless would install their equipment on the third space on the tower from the top for operation. This centerline for installation is located on the tower at the 126' high mark. The antenna equipment that DISH is proposing to install on the tower would support 5G technology. This is a key offering that their network would provide to their consumers. The proposed new co-location of DISH antennas does not present any detrimental effect to the community public safety, health and/or welfare. Even with the 5G capable technology that the equipment would bring to the community.

DISH Wireless is a division of the company we all know to be the satellite television provider. In recent years, DISH has become one of the major wireless carriers. Their focus will be providing 5G wireless connectivity to power the Smart Cities of the future. Smart Homes, Factories, Driverless Cars, and Artificial Intelligence...in addition to the millions of wearables, sensors, devices, and robots that will support them. Additional information regarding the DISH Story is available on their web site at https://about.dish.com/company-info.

Wireless Communications have been designated Critical Infrastructure by the Federal Government and should be considered Essential Services in all Comprehensive Plans. As DISH Wireless is constructing this new network, every new facility in the network is essential to the seamless operation. This Crown Castle tower,

CROWN CASTLE
3025 Highland Pkwy Suite 510
Downers Grove, IL 60515
Phone: (630) 480-5164
www.crowncastle.com

located at 415 Taft Ave, was selected to fill a gap in the DISH Wireless network. The tower height and location are important factors in determining how network coverage can be expanded. Structure height is key in extending that coverage. The higher the structure the farther the coverage will extend.

On the Crown Castle tower, DISH Wireless would be installing their antennas, radio equipment, and associated cabling at top location on the tower. At the base of the tower, within the fenced compound area, DISH would install an ice bridge, a 5' x 7' metal platform, and an equipment cabinet. The proposed addition of DISH Wireless's equipment will not cause an increase in the height of the tower or in the existing leased ground space.

The new antenna equipment would support 5G technology. This would be in addition to other technologies that would the DISH network would offer to consumers. As an example, another technology supported by this antenna would be 4G. There is no hazard emission that is produced from the use of 5G technology. Consumers would only be able to utilize this 5G network if they should purchase a cellular device that has 5G capable technologies.

Submitted with the Special Use Permit Application, we have included a radio frequency interference statement provided by DISH RF Engineers confirming that all frequencies utilized by DISH Wireless will follow guidelines enforced by the Federal Communications Commission. This is further confirmation the proposed new Co-location of DISH antennas does not present any detrimental effect to the community public safety, health and/or welfare. Even with the 5G technology capability provided by the new antennas.

It is also worth mentioning that the antenna equipment DISH Wireless is utilizing would be of similar make and models that other carriers are installing on their telecommunication towers to support their network. As technology improves for cellular networks there will always be the need for future equipment upgrades to DISH Wireless's network. This need would be the same for any carrier in the cellular market.

In the coming years, DISH Wireless will continue to expand their network. As mentioned previously, every new facility in the DISH network is essential to the seamless operation of this new network. This Crown Castle tower, located at 415 Taft Avenue, was selected to fill a gap in the DISH Wireless network.

The proposed addition of the DISH Wireless equipment at this location, even with the 5G technology offered by the antennas, this tower will not be hazardous to the community surrounding this property. As confirmed in the radio frequency statement provided by the DISH RF Engineering Manager, DISH Wireless shall comply with all FCC rules regarding interference to other radio services and human exposure to radio frequency energy.

CROWN CASTLE

3025 Highland Pkwy Suite 510
Downers Grove, IL 60515

Phone: (630) 480-5164
www.crowncastle.com

If there are still any outstanding questions or concerns, please feel free to reach out using any of my contact information listed below in my signature. Addressing all concerns for this project is of utmost importance to myself, and Crown Castle.

Best regards,

Ariel Stouder
Senior Zoning and Permitting Specialist
Fullerton Engineering, on behalf of Crown Castle
M: 574-849-8420
Email: astouder@fullertonengineering.com

CROWN CASTLE

9045 River Rd,
Indianapolis, IN 46240

Phone: (317) 249-2028
www.crowncastle.com

RECEIVED
FEB 10 2023
VILLAGE OF GLEN ELLYN

February 7, 2023

IL – Glen Ellyn
Village of Glen Ellyn
Community Development Department
535 Duane Street
Glen Ellyn, IL 60137

Via Mail

************NOTICE OF ELIGIBLE FACILITIES REQUEST************

RE: Request for Minor Modification to Existing Wireless Facility – Section 6409
Site Address: 415 Taft Avenue, Glen Ellyn, IL 60137
Crown Site Number: 873681 / Crown Site Name: Chicago
Customer Site Number: CHCHI00216A / Application Number: 559909

Dear Staff:

On behalf of DISH Wireless L.L.C. ("Dish Wireless" or "Applicant"), Crown Castle USA Inc. ("Crown Castle") is pleased to submit this request to modify the existing wireless facility noted above through the collocation, replacement and/or removal of the Applicant's equipment as an eligible facilities request for a minor modification under Section 6409[1] and the rules of the Federal Communications Commission ("FCC").[2]

Section 6409 mandates that state and local governments must approve any eligible facilities request for the modification of an existing wireless tower or base station that does not substantially change the physical dimensions of such tower or base station. Under Section 6409, to toll the review period, if the reviewing authority determines that the application is incomplete, it must provide written notice to the applicant within 30 days, which clearly and specifically delineates all missing documents or information reasonably related to whether the request meets the federal requirements.[3] Additionally, if a state or local government, fails to issue any approvals required for this request within 60 days, these approvals are deemed granted. The FCC has clarified that the 30-day and 60-day deadlines begins when an applicant: (1) takes the first step required under state or local law; and (2) submits information sufficient to inform the jurisdiction that this modification qualifies under the federal law[4]. Please note that with the submission of this letter and enclosed items, the thirty and sixty-day review periods have started. Based on this filing, the deadline for written notice of incomplete application is March 10, 2022, and the deadline for issuance of approval is April 14, 2023.

The proposed scope of work for this project includes:

---

[1] Middle Class Tax Relief and Job Creation Act of 2012, Pub. L. No. 112-96, § 6409 (2012) (codified at 47 U.S.C. § 1455).
[2] *Acceleration of Broadband Deployment by Improving Wireless Facility Siting Policies*, 29 FCC Rcd. 12865 (2014) (codified at 47 CFR § 1.6100); and *Implementation of State & Local Governments' Obligation to Approve Certain Wireless Facility Modification Requests Under Section 6409(a) of the Spectrum Act of 2012*, WT Docket No. 19-250 (June 10, 2020).
[3] *See* 47 CFR § 1.6100 (c)(3). [4] *See* 2020 Upgrade Order at paragraph 16.

CROWN CASTLE

9045 River Rd,
Indianapolis, IN 46240

Phone: (317) 249-2028
www.crowncastle.com

Collocation of antennas, ancillary equipment, and ground equipment as per plans for a new carrier on an existing wireless communication facility.

At the end of this letter is a checklist of the applicable substantial change criteria under Section 6409. Additionally, please find enclosed the following information in support of this request:

(1) Special Use Permit Application;
(2) Existing Plat of Survey;
(3) RF Interference Statement;
(4) Project Narrative;
(5) $1,000.00 Escrow;
(6) Construction Drawings;
(7) Structural Analysis; and
(8) Section 6409 Substantial Change Checklist.

As these documents indicate, (i) the modification involves the collocation, removal or replacement of transmission equipment; and (ii) such modification will not substantially change the physical dimensions of such tower or base station. As such, it is an "eligible facilities request" as defined in the FCC's rules to which the 60-day deadline for approval applies. Accordingly, Applicant requests all authorization necessary for this proposed minor modification under Section 6409.

Our goal is to work with you to obtain approvals earlier than the deadline. We will respond promptly to any request for related information you may have in connection with this request. Please let us know how we can work with you to expedite the approval process. We look forward to working with you on this important project, which will improve wireless telecommunication services in your community using collocation on existing infrastructure. If you have any questions, please do not hesitate to contact me.

Regards,

Crown Castle
Agent for Applicant

CROWN CASTLE

9045 River Rd,
Indianapolis, IN 46240

Phone: (317) 249-2028
www.crowncastle.com

Section 6409 Substantial Change Checklist
Towers Outside of the Public Right of Way

The Federal Communications Commission has determined that a modification substantially changes the physical dimension of a wireless tower or base station under 47 U.S.C. § 1455(a) if it meets one of six enumerated criteria under 47 C.F.R. § 1.6100.

Criteria for Towers Outside the Public Rights of Way

YES/NO **NO**	Does the modification increase the height of the tower by more than the greater of: (a) 10% (b) or, the height of an additional antenna array plus separation of up to 20 feet from the top of the nearest existing antenna?
YES/NO **NO**	Does the modification add an appurtenance to the body of the tower that would protrude from the edge of the tower more than 20 feet or more than the width of the tower structure at the level of the appurtenance, whichever is greater?
YES/NO **NO**	Does the modification involve the installation of more than the standard number of new equipment cabinets for the technology involved or add more than four new equipment cabinets?
YES/NO **NO**	Does the modification entail any excavation or deployment outside the current site by more than 30 feet in any direction, not including any access or utility easements?
YES/NO **NO**	Does the modification defeat the concealment elements of the eligible support structure?
YES/NO **NO**	Does the modification violate conditions associated with the siting approval with the prior approval the tower or base station other than as specified in 47 C.F.R. § 1.6100(c)(7)(i) – (iv)?

If all questions in the above section are answered "NO," then the modification does not constitute a substantial change to the existing tower under 47 C.F.R. § 1.6100.

DISH Wireless L.L.C.
9601 S. Meridian Blvd.
Englewood, CO 80112
303.723.1000

Village of Glen Ellyn, Building Division
535 Duane Street
Glen Ellyn, IL 60137

12/28/2022

RE: Project Description and Location: CHCHI00216A – 415 Taft Av, Glen Ellyn (the "Project")

To whom it may concern:

This letter responds to your request for information about the Project referenced above, specifically the potential to interfere with communication facilities located nearby and conformance with the Federal Communications Commission ("FCC") rules governing human exposure to radio frequency energy (see FCC OET Bulletin 65 guidelines). DISH Wireless L.L.C. ("DISH") shall comply with all FCC rules regarding interference with other radio services and all FCC rules concerning human exposure to radio frequency energy.

The FCC has granted licenses for the use of certain radio frequencies exclusively by wireless service providers, including DISH. Each wireless service provider uses specific frequencies (channels) on which to transmit and receive radio signals. Pursuant to these licenses, DISH is authorized to provide wireless service nationwide.

Wireless transmitters must be type-accepted by the FCC to ensure compliance with technical standards that limit the frequencies, output power, radio frequency emissions, spurious radio noise, and other technical parameters. Wireless licensees like DISH are required to use type-accepted equipment. The assignment of frequencies and the FCC rules keep cellular radio signals from interfering with, or being interfered with by, other radio transmissions and provide guidelines outlining the limits for permissible human radio frequency exposure.

DISH shall comply with all FCC rules regarding interference to other radio services and human exposure to radio frequency energy. In the unlikely event that interference does occur, DISH agrees to fully cooperate with the entity experiencing interference to identify and correct, to the extent reasonably possible, any issues caused by the DISH installation.

Very truly yours,

Imran Khan
RF Engineering Manager – Chicago

NOTICE OF PUBLIC HEARING

Fullerton Engineering Consultants, LCC, on behalf of DISH Wireless LLC and OBO Crown Castle USA Inc., is requesting approval of a Special Use Permit in accordance with Sections 10-4-16(E)2 and 10-8-8 of the Zoning Code to allow an addition of DISH Wireless 5G capable antennas and support equipment to the existing cellular tower at 415 Taft Avenue. The Glen Ellyn Plan Commission will conduct a public hearing to consider the Special Use Permit on **Thursday, April 27, 2023, at 7:00 p.m.** in the Galligan Board Room on the 3rd floor of the Glen Ellyn Civic Center, 535 Duane Street, Glen Ellyn, Illinois, 60137.

The property is located in the C4-Office District and legally described as follows:

LOT 9 AND THE WEST ½ OF THE VACATED ALLEY LYING EAST OF AND ADJOINING SAID LOT 9 AND LOT 10 IN BLOCK 79 IN WHEATON ESTATES, BEING A SUBDIVISION IN SECTION 22 AND SECTION 23, TOWNSHIP 39 NORTH, RANGE 10, EAST OF THE THIRD PRINCIPAL MERIDIAN, ACCORDING TO THE PLAT THEREOF RECORDED AUGUST 7, 1925 AS DOCUMENT 197514.

P.I.N. 05-23-102-018

All persons who are interested are invited to attend the public hearing of the Plan Commission to listen and be heard. Information related to the request, including the plans for the proposed project are available for public review at any time before or after the meeting between the hours of 8:00am and 4:30pm in the Community Development Department of the Civic Center, 535 Duane Street, Glen Ellyn, Illinois. Questions related to the request should be directed to Brad Iwicki, Planning Intern, biwicki@glenellyn.org. All public comments received by 4:30 pm on Thursday, April 27, 2023, will be read into the record at the public hearing.

Village of Glen Ellyn
350 Foot Buffer from 415 Taft Ave
NEWTON AVE
HILLC
GREENWOOD ST
ROOSEVELT RD
TAFT AVE
352
368-370
376-386
404
420
428-440
444
480
357
369-373
375
395
405
415
425
445
455
467
479-483
401
415
435
441
449
455
475
Glen Ellyn Village Links
Subject properties
350ft Buffer from properties
Parcels within 350ft
0 35 70 140 Feet
N
GIS consortium

NOTICE OF PUBLIC HEARING

Fullerton Engineering Consultants, LCC, on behalf of DISH Wireless LLC and OBO Crown Castle USA Inc., is requesting approval of a Special Use Permit in accordance with Sections 10-4-16(E)2 and 10-8-8 of the Zoning Code to allow an addition of DISH Wireless antennas and support equipment to the existing cellular tower at 415 Taft Avenue. The Glen Ellyn Plan Commission will conduct a public hearing to consider the Special Use Permit on **Thursday, April 27, 2023, at 7:00 p.m.** in the Galligan Board Room on the 3rd floor of the Glen Ellyn Civic Center, 535 Duane Street, Glen Ellyn, Illinois, 60137.

The property is located in the C4-Office District and legally described as follows:

LOT 9 AND THE WEST ½ OF THE VACATED ALLEY LYING EAST OF AND ADJOINING SAID LOT 9 AND LOT 10 IN BLOCK 79 IN WHEATON ESTATES, BEING A SUBDIVISION IN SECTION 22 AND SECTION 23, TOWNSHIP 39 NORTH, RANGE 10, EAST OF THE THIRD PRINCIPAL MERIDIAN, ACCORDING TO THE PLAT THEREOF RECORDED AUGUST 7, 1925 AS DOCUMENT 197514.

P.I.N. 05-23-102-018

All persons who are interested are invited to attend the public hearing of the Plan Commission to listen and be heard. Information related to the request, including the plans for the proposed project are available for public review at any time before or after the meeting between the hours of 8:00am and 4:30pm in the Community Development Department of the Civic Center, 535 Duane Street, Glen Ellyn, Illinois. Questions related to the request should be directed to Brad Iwicki, Planning Intern, biwicki@glenellyn.org. All public comments received by 4:30 pm on Thursday, April 27, 2023, will be read into the record at the public hearing.

Published in Daily Herald April 12, 2023 (4598268)

RECEIVED

APR 21 2023

VILLAGE OF GLEN ELLYN

3I

CERTIFICATE OF PUBLICATION

Paddock Publications, Inc.

DuPage County

Daily Herald

Corporation organized and existing under and by virtue of the laws of the State of Illinois, DOES HEREBY CERTIFY that it is the publisher of the **DuPage County DAILY HERALD**. That said **DuPage County DAILY HERALD** is a secular newspaper, published in Naperville, DuPage County, State of Illinois, and has been in general circulation daily throughout DuPage County, continuously for more than 50 weeks prior to the first Publication of the attached notice, and a newspaper as defined by 715 ILCS 5/5.

I further certify that the **DuPage County DAILY HERALD** is a newspaper as defined in "an Act to revise the law in relation to notices" as amended in 1992 Illinois Compiled Statutes, Chapter 715, Act 5, Section 1 and 5. That a notice of which the annexed printed slip is a true copy, was published 04/12/2023 in said **DuPage County DAILY HERALD**. This notice was also placed on a statewide public notice website as required by 5 ILCS 5/2.1.

BY Paula Baltzer

Designee of the Publisher of the Daily Herald

Control # 4598268

PADDOCK PUBLICATIONS, INC. Corporate SEAL ILLINOIS

Glen Ellyn Plan Commission
535 Duane Street
Glen Ellyn, IL 60137

Meeting 5/25/2023 7:00 PM
Department: Community Development
Department Head: Marty Scott
Category: Commission Recommendation
Prepared By: Scott Viger

AGENDA ITEM (ID # 2023-570)

DOC ID: 2023-570

Discussion and Recommendation - Proposed Zoning Text Amendments: Possible amendments to the Zoning Code relating to the keeping of hens.

Statement of the Issue:
Please see the attached staff report.

Analysis:
Please see the attached staff report.

Budget Impact:
N/A

Contribution to Strategic Plan (if applicable)

Action Requested:
The Plan Commission should consider the proposed text amendments and provide a recommendation to approve, recommendation with conditions, or recommendation to not proceed.

Attachments:
1. PC Memo - Village Code Text Amendments - Hens - 5-25-23
2. Downers Grove - Hen Permit Application Packet
3. 03-09-23 Plan Commission Special Meeting Minutes-FINAL
4. Draft Motions to Approve - Hens - 5-25-23

STAFF REPORT

TO: Glen Ellyn Plan Commission

FROM: Martin Scott, AICP, Community Development Director
Scott R. Viger, AICP, Planning Consultant

DATE: May 19, 2023, 20223

FOR: May 25, 2023, Plan Commission Meeting

SUBJECT: Village Code Text Amendment, Keeping of Hens

PETITIONER: The Village of Glen Ellyn

REQUEST: Village staff is requesting review of a text amendment regarding the keeping of hens to the Village Code at a public hearing and subsequent recommendations to the Village Board.

PUBLIC NOTICE: Notice of the public hearing was published in the February 21, 2023, edition of The Daily Herald advertising a public hearing to be held on Thursday, March 9, 2023. The meeting was continued until Thursday April 27, 2023, and then again to Thursday, May 25, 2023.

SUMMARY: Several months ago, a local group known as Hen Ellyn approached the Village Board seeking code changes to allow the keeping of hens. The Board directed staff to begin researching the issue and to bring the results to the Plan Commission for consideration. Draft text amendments were brought forward to the Plan Commission during the March 9, 2023, meeting. The Commission reviewed the draft regulations, held a public hearing, and then asked a series of questions. Members of Hen Ellyn and other residents voiced their support for the code amendments and promised to provide additional suggestions and resources. Answers to the Commission questions are listed below with feedback provided by Hen Ellyn in parentheses.

- *Limit on coop size?*
  - Maximum shed size in town is 150 SQ.FT. At maximum 8 hens that's 18.75 SQFT/hen. That would be an overly large coop and is not recommended.
  - Most towns seem to rest at 150 SQFT. Maximum. Westmont is 50 SQFT and 6 hens (8.33 SQ.FT./hen).
  - Easiest to regulate it as a shed (150 SQFT) it would be an odd occurrence that a coop would get that large. The setbacks will protect abutting properties.
  - (We should have minimum SQ.FT per hen. 3 SQ.FT./hen)-Hen Ellyn

- *Licensing for keeping hens?*
  - Not necessary since a permit is required and the regulations would be enforced by the Community Development Department.
  - Towns have expressed increased staff workload etc. as reason not to do yearly inspections or in Crystal Lake's example, a reason not to allow hens at all.
  - Free registration with Illinois Dept. of Agriculture? Bensenville required this but we haven't seen it anywhere else. This way the State can contact people regarding epidemic outbreaks.

- *Are minimum lot sizes a typical requirement?*
  - No. Most communities simply allow them on Single-Family Zoned lots. We do not anticipate townhomes, apartments or condominiums looking for hens.
  - (Hen Ellyn is not sure about limiting to only Single-Family lots, calling it an "equity issue").

- *Typical setbacks from lot lines, accessory structures, and principal structures*
  - Typical regulations include 10' setback from all lot lines, and 5-10' separation of coop from house / principal structure.
  - Some towns have distance to house on abutting properties. The on-site setbacks would suffice.

- *Why are ducks sometimes included? Are quail typically allowed as well?*
  - It is unclear why quail and ducks have been included in some ordinance and not others. Quail fly easily out of uncovered fenced areas and can get through smaller holes in fencing. The draft ordinance language is now restricted to hens only.
  - (Billy Joe Mills wasn't sure why Hen Ellyn included. He will ask the group).

- *Are privacy fences required?*
  - Sometimes 5 – 6' fences are required (e.g. Darien, Naperville, St Charles). The question here is purpose of the fencing. Is the privacy fence around the entire rear yard? This addresses the "neighbor's dog barking at the chickens " issue but would dramatically raise the cost of a chicken coop.
  - Naperville is an either/or, while Darien requires the entire yard be fenced. St. Charles just around the coop itself and any enclosed outdoor pen.

- *Typical size of run and coop?*
  - This is very dependent on the number of hens and whether or not the remainder of the yard is fenced-in.
  - Most runs appear to be rather small; ≤50 SQFT.

- *Clarify permitted/prohibited location of coops (e.g. not allowed in the residence or garage, only in coops, etc.)*
  - "Residence" as a location for hens has been removed from the draft language.

- *How would non-conforming lots be affected by these rules? Would they be allowed to add hens?*
    - Inasmuch as there are adequate setbacks and other regulations applied, we would recommend not distinguishing between conforming and non-conforming lots. Permission to keep hens would be treated like any other request to improve a rear yard.

- *How would coops count toward regulations regarding the number of accessory structures and lot coverage?*
    - Yes, coops would be considered as accessory structures and all applicable regulations would apply.

- *Does our GE waste hauler allow chicken waste in normal pick-ups?*
    - Yes, it would be collected with general trash pick up.

- *Clarify what colors are regulated, allowed or are ordinances mostly silent?*
    - Codes are mostly silent. The goal is to ensure that garish color are not utilized.

- *Are retail sales of eggs typically banned?*
    - Most codes are silent on this issue. We have heard antidotally that neighbors will barter/trade eggs (e.g., food scraps traded for eggs, etc.)

- *Types of inspections? Initial inspection and/or annual?*
    - Initial inspections are standard and then sometimes yearly follow ups.
    - The initial inspection is recommended and any follow-up inspections as a Code Enforcement issue or complaint driven.

- *Which communities considered hens did approve them and <u>why</u>?*
    - Crystal Lake has discussed hens two or three times (2020 & 2023) and decided not moved forward. The Council felt that as an urban environment it was not appropriate, fresh eggs are readily available nearby concerns included animal abandonment, noise from the chickens and neighboring barking dogs, disease, and predators as well as staff time dedicated for licensing and annual inspections.
    - Park Ridge simply felt it was not appropriate for their community.
    - Municipalities that have decided not to allow the keeping of hens referenced a few specific items, noise also noise from neighboring dogs, predators, odor, and questioning their compatibility with residential neighborhoods.
    - Other towns, Lombard, St. Charles, and others have experienced no adverse impacts or complaints. Bensenville had only one or two complaints regarding roosters that Code Enforcement quickly resolved as roosters were prohibited.
    - In some cases, groups such as Hen Ellyn asked and no one really objected, so the towns approved it (or created a pilot program first, and the approved code amendments).
    - Hens do not seem to have caused issues where they have been approved.

- *Commission would like some feedback from local residential realtors/brokers on whether or not an ordinance allowing hens has an impact on property values.*
  - Staff reached out to several realtors and only one responded with a neutral response.

Staff has drafted the attached revised text amendment for your consideration. The language of the revised text amendment draft was prepared utilizing prior staff experience with this issue in other communities, as well as peer community research, best practices research and discussions with the local community group Hen Ellyn. Hen Ellyn has provided additional background information which will be forwarded to you via email well in advance of the meeting.

The revised draft alters several aspects of the prior edition, including limiting the ordinance to hens (deleting roosters, ducks, and quail), including a minimum of 2 hens along with the maximum of 8, specifying a minimum coop size per chicken along with an overall minimum and maximum coop size, maintaining the prior locational requirements while simplifying the language, and regulating a coop as an accessory structure.

The brief table below highlights some of the proposed requirements:

Minimum & Maximum number of Chickens/Hens	8 as a maximum (Hen Ellyn suggests a min. of 2 to a max. of 8)
Minimum Coop Size	6 SQFT
Maximum Coop Size	100
SQFT/Chicken	3 - 5 SQFT
Maximum Coop Height	15’
Minimum Lot Size	No
Coop location	Rear Yard Only; and only lots that already contain a single family home.
Setbacks	10' from all property lines
Coop colors (Architectural Guidelines)	Suggested to remain
Privacy fence	Not recommended *
Roosters	No
Other Fowl (Ducks, Quails)	No
Licensing	No, permit and regulations will suffice
Inspections	Initial, then complaint driven
Retail Sales	No
Slaughter of chickens on site	No
Neighbor consent form	Possible additional requirement**

*A privacy fence would greatly increase the cost of obtaining a coop

** Commissioner Brown also suggested the possible inclusion of regulation used by Downers Grove which requires a neighbor consent form to be completed as part of the permit process. The details are attached. This type of form is not common with most communities who allow hens but is sometimes used in relation to large construction projects, etc.

PLAN COMMISSION ACTION:

Staff is seeking Plan Commission feedback regarding these draft regulations. If the Commission believes the issues raised at the March meeting have been addressed, then these amendments would proceed to the Village Board. If further refinement is deemed necessary, staff can return with revisions at a future meeting.

The Plan Commission should review and discuss the attached proposed Zoning Code text amendment. The Commission may recommend approval, approval with revisions, or denial of the proposed amendment.

DRAFT ZONING CODE TEXT AMENDMENTS
May 25, 2023

Underlined = New Text; ~~Strikethrough~~ = Deleted Text

PROPOSED AMENDMENTS TO CHAPTER 2 (DEFINITIONS), AND CHAPTER 5 (SUPPLEMENTARY REGULATIONS) OF THE ZONING CODE AND OF THE GLEN ELLYN VILLAGE CODE.

1. **Amend Section 10-2-2 – Terms Defined: Add "Hen"**

Definitions:

Hen: the female of the species Gallus gallus domesticus (chicken). ~~Female Anas platyrhynchos (duck), or females from the family Odontophoridae (quail).~~

2. **Amend Section 10-5-23 – Add a new section 23 titled "Keeping of Hens"**

(A) Regulations:

1. The keeping of hens is permitted on any single-family residentially zoned property, which is improved with a single family residential structure.
2. Hens shall not be permitted to run at large in the Village.

3. No person shall keep or harbor more than eight (8) hens on any residential lot.
4. No person shall keep or harbor any rooster. ~~For a period exceeding 24 hours at a time for the purpose of mating hens. The rooster must be promptly removed from the property.~~
5. Hens may be allowed outside in a fenced rear yard or other permanently fenced area or temporarily fenced area while in the presence of their owners or keepers.
6. There shall be no slaughtering of any poultry outdoors on any residential lot.
7. When left unattended, hens shall be kept in a covered outside enclosure ~~or inside a residence,~~ which shall at all times maintain a habitable temperature.
8. Coop ~~Hen Shelter~~ Regulations:
    a. Confinement enclosures are prohibited in all Front, Corner Side and Side Yards areas.
    b. Coops shall not exceed 100 SQ.FT. in area.
    c. A coop shall be located only in the rear yard of a lot and no closer than ten feet (10') of either side lot line and no closer than ten feet (10') from any rear lot line.
    d. The maximum coop ridge height shall not exceed fifteen feet (15').
    e. Coops are subject to all lot coverage ratio regulations as well as the total number of accessory buildings permitted (10-5-4 (3)).
    f. Coops shall be designed to be architecturally compatible with the principal residence or any existing accessory structure or the principal residence's rear yard landscape theme and shall be constructed of quality durable building materials.
    g. Coops shall be constructed in a workmanlike manner and maintained to be weatherproof in order to withstand inclement and extreme weather.
    h. All coops shall be designed and constructed with adequate ventilation and in a manner that allows them to be easily cleaned.
    i. The interior area of any coop and the rear yard area shall be maintained in a sanitary condition.
    j. All feed shall be maintained in rodent proof containers.

Other Proposed Village Code amendments; Title 6 – Police Regulations; Chapter 3 - Animal Control; Section 8 - Prohibited Animals:

Amend Section 6-3-8 – Prohibited animals. Remove "chickens".

6-3-8. - Prohibited animals.

It shall be unlawful to stable or house horses, ponies, burros, mules, goats, cattle, swine, sheep, ~~chickens~~ or other similar animals within the Village.

Village of Downers Grove
801 Burlington Avenue, Downers Grove, IL 60515
Phone: 630-434-5515

- HEN PERMIT APPLICATION -

DATE_____ **Permit Number:** ___ ___ -___ ___ - ___ ___ ___ - ___ ___ ___ ___
(Office Use Only)

PRINT CLEARLY

	Site Address:	**Parcel Pin #**
	Applicant Name:	**Phone: Day: ( )** **Evening: ( )** **Email:**

Number of hens to be kept _____. (Maximum 4 hens; No roosters allowed.)

Initial:

_____ 1) I am aware that owners and adult tenants of all adjacent properties (i.e., all properties that contact the subject property at any point) must give their written consent for any hen permit application to be approved.

_____ 2) I am aware that I first must receive approval from the Village prior to obtaining hens.

_____ 3) I will follow all Village ordinances and state laws relating to the care and keeping of animals.

_____ 4) I grant the right for Village staff to enter onto my property to inspect the coop as necessary to comply with permit requirements.

_____ 5) I am aware that I am responsible for keeping hens within the confines of my property at all times.

_____ 6) I acknowledge that I live in a single-family detached dwelling as per zoning code.

_____ 7) I understand that the permit is a limited license for the activity and no vested zoning rights arise from the permit being issued and that the permit does not transfer to a new owner should the property be sold. The permit is valid for five years from the date of issuance.

_____ 8) I understand the private restrictions on the use of the property shall remain enforceable and shall supersede the permit. I affirm that there are no private restrictions including, but not limited to, deed restrictions, neighborhood or homeowners' association bylaws, covenants, and restrictions and rental agreements. A permit issued to a person whose property is subject to private restrictions that prohibit keeping of hens is void.

- HEN PERMIT APPLICATION -

Attach a current plat of survey *showing the potential location of the coop and identify the adjacent properties by street address*

Describe the hen coop and pen including materials used and cubic feet

Under Penalty of Intentional Misrepresentation and/or Perjury, I declare that I have examined and/or made this applications and it is true and correct to the best of my knowledge and belief. I agree to construct said improvement in compliance with all provisions of the applicable ordinances. I realize that the information that I have affirmed hereon forms a basis for the issuance of the permit(s) herein applied for and approval of plans in connection there with shall not be construed to permit any construction upon said premises or use thereof in violation of any provision of any applicable ordinance or to excuse the owner from complying therewith.

Applicant Signature	Printed Applicant Name	Date
Property Owner		Date
Received by Staff	Title	Date
Approved by Staff	Title	Date

- HEN PERMIT APPLICATION -

NEIGHBOR CONSENT FORM
THIS PAGE MUST BE SUBMITTED AT TIME OF APPLICATION

The Village of Downers Grove requires that any person wanting to keep hens shall first receive written approval from all property owners and adult tenants adjacent to the subject property. Adjacent means all parcels of property that share a property line with the applicant's property including properties that contact each other only at one point.

Applicant Name:

Site Address:

Attached is a current plat of survey with a sketch of where the coop and pen will be. I/We, being the adjacent property owner(s), have no objections to the above named person, keeping hens in accordance with Village of Downers Grove Municipal Code.

OWNER/TENANT NAME	OWNER/TENANT ADDRESS	OWNER/TENANT PHONE	SIGNATURE

MINUTES
REGULAR PLAN COMMISSION MEETING
March 9, 2023

Call to Order and Roll Call

Chairperson Tim Loftus called the meeting to order at 7:05 p.m. and explained the Plan Commission's function and operating procedure as an advisory body. He described the public hearing protocol including for public comment and announced that comments would be recorded. Mr. Loftus introduced Trustee Liaison Steve Thompson, Community Development Director Marty Scott, Senior Planner Atrian Fard, Recording Secretary Barbara Dutton-Thomas and new student member Emma Smith. Roll was called. Chairperson Loftus, Plan Commissioners Arango, Brown, Dawson, Kreuzer, Saeed, Thakkar and Wyant; Commissioner Cooper was absent.

Approval of Minutes

Commissioner Dawson moved to approve the draft minutes of the December 8, 2022, Plan Commission meeting; seconded by Commissioner Saeed, the motion passed by voice vote.

Public Comment Non-Agenda Items

Village President Mark Senak, on behalf of the Village Board and the residents of the community, thanked the Plan Commission members for their input and their effort to serve the community.

Public Hearing – 1102 Hill Avenue

Commissioner Arango moved to open the Public Hearing to consider approval of a special use permit to allow an addition of DISH Wireless 5G antennas and support equipment to an existing cellular tower. Seconded by Commissioner Brown, the motion passed by voice vote.

Staff Introduction

Sworn in, Atrian Fard, Sr. Planner, 535 Duane, reported receiving an email from the attorney of the Petitioner requesting that the hearing be continued to the next regular meeting date. Commissioner Kreuzer, seconded by Commissioner Wyant, moved to continue the Public Hearing until April 27, 2023. The motion passed by voice vote, with all voting, "Yes," except Commissioner Dawson, who voted, "No."

Public Hearing – Proposed Text Amendments

Commissioner Saeed moved to open the Public Hearing to consider text amendments to the Zoning Code. Seconded by Commissioner Brown, the motion passed by voice vote. Chair Loftus noted that each proposed amendment could be discussed separately to provide direction to staff and possible recommendations to the Village Board

KEEPING HENS

Staff Introduction

Sworn in, Marty Scott, Director of Community Development, 535 Duane, Glen Ellyn, gave an overview of the process for updating zoning text, and introduced the topic of keeping of hens in the Village. He explained that a local community group named Hen Ellyn that has been part of the process, and that peer community research had been performed, as well. Mr. Scott said the proposed focuses on type and number of birds and said that a coop would be treated like other structure put in a yard – like a shed or a deck – and has to be compatible with the home, and that a fenced yard would be required. He related his experience in regulating hen-keeping, mentioning that complaints are rare, and cited benefits of the practice, including environmental and educational.

Commissioner Questions

Chairperson Loftus remarked that he didn't see any proposed concerning licensing, as well as observed that a range of setbacks mentioned in regulations and wondered if zoning districts need to be defined for hen-keeping purposes. Development Director Scott stated that most communities haven't delineated zones, as coops are looked at as similar to accessory structures, such as playhouses. Wondering if a distinction needs to be made between hen shelter and associated outdoor area, and perceiving a conflict relative to building permitting, Mr. Loftus suggested additional language to clarify the requirements. Mr. Scott noted that a large space isn't needed for eight hens, but saw no problem in defining a size specifically for the coop. In response to a query from Commissioner Arango, Mr. Scott said a permit would be required to verify all aspects of a proposed set-up. Ms. Arango asked about aesthetics, to which Mr. Scott said that people spend [considerable] money on coops and speculated that the worst-case scenario would be a cedar or natural application.

Commissioner Wyant asked why some communities don't allow keeping hens. Director Scott responded that concerns in one town arose about yards not being big enough as well as a fear of cleanliness issues. Mr. Wyant suggested talking to some communities that rejected the idea and cited a University of Minnesota study that yielded concerns over disease, noise, odor, pests and waste management. Mr. Scott related that noise, if any, is minimal, and that in his observation, cleanliness was not a factor. Commissioner Wyant expressed concern over coops, given the trend toward outdoor living and the incidence of coyotes. Commissioner Saeed asked if hens had any environmental impacts, to which Mr. Scott replied that he is not aware of any, adding that chicken droppings are used as fertilizer. Relating that she has seen neighbors with hens, Ms. Brown asked how this is currently regulated. Mr. Scott replied that responses to such situations are complaint-driven. Commissioner Kreuzer asked how waste is addressed in other communities. Mr. Scott said that it is typically bagged, separately, for garbage pick-up. Mr. Kreuzer asked if the Village's waste hauler would allow this waste; Mr. Scott said this is a good question. Mr. Kreuzer asked about the proposal for keeping ducks and about fence type required, to which Mr. Scott deferred the duck question to Hen Ellyn, and said the fencing he's observed is typically at least 4-ft. high. In response to a query from Mr. Kreuzer about commercial sales of eggs, Director Scott said he believes it would be prohibited from homes. To a question about lot-size requirements, he said this is a consideration of the Commission, but there's "no real science to it."

Commissioner Dawson asked if any restrictions might be placed on paint colors for coops. Calling this the "weakest link" in the proposed ordinance, Mr. Scott said Staff would take on the risk of monitoring this, though guidelines could be drawn up. Mr. Dawson argued for a minimum lot size requirement and asked if periodic inspections would be performed. Mr. Scott replied that there were no complaints in three years of experience he had with a hen-keeping ordinance, and that hen owners tend to be responsible, though said there's a possibility of performing inspections. Mr. Dawson asked if proportional aspects of setback calculations for non-conforming lots would prohibit hen space. Sworn in, Ms. Fard, Sr. Planner, 535 Duane, explained that this regulation, unlike setbacks for a house, specifies 10 ft. from the rear and side, a flat rate, she said, that, if there is an objection to it, could be adjusted to reflect lot width. Commissioner Wyant said he's not sure how the community feels about having chickens near their homes, so would like some quantifiable data from communities that have disallowed hens, as well as opinions of realtors as to the effect of hens on home valuations. Chairperson Loftus asked if power would be needed to maintain a habitable temperature. Mr. Scott said he can't speak to this, but that it would probably be covered by the initial permit. Ms. Brown suggested tabling the discussion, pending further information.

Public comment

The following individuals, sworn in, made respective comments:

Emily Henkels, 779 Harding Ave., representing Hen Ellyn, a group promoting hen-keeping in the community, said she doesn't intend to keep hens herself, but would like to have neighbors who do. She invited questions to the group.

Jenna Lindman, 365 S. Kenilworth, said she's always wanted to keep chickens, and having lived near people who kept them on narrow lots, observed that the practice had never been a nuisance. She said hens were a joy to see and that they typically only take up a small space.

Matthew Guadette, 409 Hill, who stated that he had kept four hens on a 5,600SF lot in Oak Park, said waste was put into the trash but it could also be composted. He added that hen-keeping is educational for children, and gives them a sense of how food ends up on a plate.

William Weicher, 241 Traver, asked the Commission to take some time in its decision and to draw on available resources for more information. He said having hens gives children a reason to get outside and interact with nature and to learn where food comes from. He maintained that a hen's cluck is not as loud as a dog's bark.

Billy Joe Mills, 611 Maiden Lane, who introduced himself as a co-organizer of Hen Ellyn, said the community is already surrounded by hens, pointing to nearby towns including Lombard and Lisle. He urged Glen Ellyn to be a leader in encouraging development of a local food supply and fostering resilience.

Margaret Kamm, 230 Crest Road, said she almost didn't move to Glen Ellyn because it didn't allow chickens, but real estate choices narrowed for her as properties in towns with a hen-keeping ordinance

were snapped up quickly. She added that chickens teach sustainability, particularly in this age of high egg prices.

Patrick Lopardo, 365 S. Kenilworth Ave., said he'd assumed Glen Ellyn already allowed chickens, and upon learning it didn't, got involved in the hen-keeping movement, and has come to the meeting to express support for the practice.

Angel Oakley, 641 Prairie, said she didn't come to the meeting over the hen question, but applauds the thoughtful commentary of the evening. She said she's familiar with hen-keeping through family members who kept chickens on small lots in an expensive area of California. She favored a 3-ft. setback.

Stephanie Giancarli, 84 N. Parkside, expressed concerns over the safety of 5G wireless, but was told by the Chairperson that the Public Hearing on the proposed cell tower had been continued to April 27, 2023.

A motion was made by Commissioner Dawson to close the Public Hearing; seconded by Commissioner Saeed, the motion passed by voice vote.

Commissioner Discussion

Commissioners Saeed and Thakkar agreed that any ordinance should cover hens only. Commissioner Brown said she is not well enough informed to make a determination about hens in the Village based on the information provided and the language within the proposed text amendment. Director Scott said he could come back with a report addressing a wide variety of topics. Commissioner Wyant said run-size guidance is needed. While voicing support for hens in the Village, Commissioner Dawson said he can't vote on the ordinance as written, wishing to see the maximum number of chickens reduced to four, setback deficiencies addressed, and a minimum lot size set. Mr. Kreuzer requested definitions of coop/run dimensions and shed height. Ms. Fard noted that relevant regulations for accessory structure placement already exist in the Code, and recommended against broadening restrictions, thereby creating a less inclusive environment. Chairperson Loftus favored tabling the discussion to allow opportunity to enhance ordinance language for review. Commissioner Thakkar moved to table the topic concerning an updated amendment for keeping hens until the April 27, 2023 Commission meeting. Seconded by Commissioner Brown, the motion passed by roll call vote, with all Commissioners present voting, "Yes."

OUTDOOR DINING AND PLATFORMS; FOOD TRUCKS; AND TOBACCO, VAPE AND SMOKE SHOPS

A motion to open the Public Hearing to consider amendments to text of the Zoning Code governing outdoor dining and platforms, food trucks, and tobacco, vape and smoke shops was made by Commissioner Thakkar; seconded by Commissioner Wyant, the motion carried by voice vote. Sworn in, Marty Scott, Director of Community Development, 535 Duane, Glen Ellyn, stated that these ordinances are already in place, but the Village is working to enhance them. He said that some of the outdoor dining perhaps enjoyed in the past year or two were pilot programs, for which more specifics are desired to help Staff manage application. Hence, he explained, proposed is new language, which also addresses outdoor dining platforms such as those constructed at A Toda Madre. New regulations, continued Mr.

Scott, apply to public and private spaces, whether on right-of-ways (ROW) or into a side yard. The focus, he indicated, is on permission, allowable dates, safety and so forth. Platforms, he added, present some challenges, specifically location, structural integrity, pedestrian traffic safety, maintenance and upkeep, lighting compliance, proper site management.

Chairperson Loftus asked for a description of wind blocks, to which Mr. Scott explained that they are add-ons (e.g., fencing, lattice) for stability, but that "igloos" wouldn't be allowed to infringe. Commissioner Wyant noted date exceptions (for flexibility). The Chairperson asked if platform size is limited by Code, to which Mr. Scott replied, "No," but said they are reviewed for ADA and pedestrian/vehicle safety by Staff and Public Works, respectively. Emphasizing the value of restauranteur feedback, Commissioner Wyant asked if Glen Ellyn is considering closing Main Street in summer months, as Wheaton does, to accommodate street dining. Mr. Scott said he hasn't heard of any such conversations. Commission Arango asked if the process to extend for good weather is seamless (i.e., not a lot of red tape) for restaurants, to which Mr. Scott replied affirmatively. To respond to a query by Commissioner Kreuzer about lighting near residential space above restaurants, Atrian Fard, Sr. Planner, 535 Duane St., was sworn in. She explained that when apartments are above dining establishments, though the mixed-use building is considered commercial, a ½ foot candle restriction applies. Observing that the Code was written before LED technology was invented, Commissioner Kreuzer said that nothing in the ordinances addresses it (e.g., color and temperature). Ms. Fard said LED considerations can be addressed in the final Zoning Code cleanup. He then asked how noise is measured. Mr. Scott responded that loud noise (i.e., diner) or disturbing amplified music is likely complaint-driven and addressed by the Police Department. Commissioner Kreuzer asked if restaurants will be asked to turn off their outdoor dining lights when they close, to which Ms. Fard explained that outdoor dining is subject to regular restaurant operation rules, which stipulate lights be turned off at closing. Commissioner Brown moved for the following:

After conducting a public hearing and deliberating on the requests of the petitioner, the Village of Glen Ellyn, for approval of proposed amendments to Chapter 2 and Chapter 5 of the Zoning Code as well as Chapter 1 (Streets and Sidewalks) of the Public Ways and Property of the Glen Ellyn Village Code, the Plan Commission hereby recommends:

1. Approval as discussed or amended at the Plan Commission public hearing on March 9, 2023, which are hereby incorporated into the Motions by reference as though fully set forth herein, and a copy of which will be attached to the minutes of this meeting and kept on file as part of the permanent records of the Village, of proposed amendments to Chapter 2 (Definitions) and Chapter 5 (Supplementary Regulations) of the Zoning Code as well as Chapter 1 (Streets and Sidewalks) of the Public Ways and Property of the Glen Ellyn Village Code, all relating to outdoor dining and outdoor platform regulations.

Seconded by Commissioner Arango, the motion passed on a roll call vote with Commission members Brown, Arango, Dawson, Kreuzer, Saeed, Thakkar and Wyant and Chairperson Loftus voting, "Yes."

Director Scott introduced the next set of proposed text amendments by saying that food truck activity also stems from a pilot program. He indicated that to respond to this commercial endeavor via code requirements, best practices from other communities, namely St. Charles, were examined. Staff, he continued, focused on location, products sold, compliance with Health Department, site management, sales tax procedure, and number of days and hours of operation. He said he anticipates food trucks would be allowed on private property to supplement existing businesses and at special events if invited by local taxing bodies and not-for-profits but prohibited from street operation on random days.

In response to a query from Chairperson Loftus about parking on public ROWs, Director Scott said ROW parking would only be allowed at a public event, such as one sponsored by the Park District or the College of DuPage. The Chairperson then asked whether a truck could be on a street if the Village-sponsored an event. Mr. Scott replied that it would only be permitted on the site unless a Board waiver is granted. Chairperson Loftus asked for a definition of accessibility in a food truck context. Mr. Scott said accessibility refers to placement of the truck to allow disabled individuals access to it. Mr. Loftus asked if a food truck is permitted to be on a sidewalk; on a private one, replied Mr. Scott. Sworn in, audience member Dawn Smith, 147 Kenilworth, related that trucks are on the road leading to the Boathouse and sit on brick pavers on Lenox along Lake Ellyn Park, as well as park in back of municipal lots during the French Market. Mr. Scott special events would be looked at on a case-by-case basis. Chairperson Loftus asked about a power source. Noting that generators are loud and circuit overload is a concern, Director Scott said requirements could be reviewed to see if any flexibility is needed. Mr. Loftus asked if private lot parking is curtailed by food trucks, in violation of Code; Mr. Scott noted that situations are temporary. Chairperson Loftus asked if a three-day limit would be more appropriate than a two-day limit. Ms. Smith related that the carnival lasts one week, “The Taste” runs four days, and everything else is a one-day event. Mr. Scott said language could perhaps be added pertinent to extended limits for special events. Ms. Smith suggested language be included to prevent grease being dumped into sewers. Mr. Scott said it’s not a bad idea to call this out. In response to a question from the Chairperson about hour restrictions, Mr. Scott said he doesn’t think a truck would operate beyond eight hours, while Commissioner Kreuzer observed that trucks usually run out of food after two to three hours. Commissioner Wyant wondered whether restaurants look at food trucks as cutting into their business, expressing a wish for feedback on this, while Commissioner Arango stressed a need to be specific about proximity to restaurants. Sworn in, Trustee Steve Thompson, 535 Duane St., Glen Ellyn, observed that local restaurants typically don’t want to participate in “Taste,” and don’t view food trucks as competition, seeing them as temporary, while Mr. Kreuzer noted that restaurants benefit from takeout by Beer Cellar patrons. The distinction between food trucks and vendor carts, and the desire for flexibility in regulating temporary signage were discussed. Commissioner Dawson moved for the following:

After conducting a public hearing and deliberating on the requests of the petitioner, the Village of Glen Ellyn, for approval of proposed amendments to Chapter 5 (Supplementary Regulations) of the Glen Ellyn Zoning Code, the Plan Commission hereby recommends:

1. Approval as discussed or amended at the Plan Commission public hearing on March 9, 2023, which are hereby incorporated into the Motions by reference as though fully set forth herein, and a copy of which will be attached to the minutes of this meeting and kept on file as part of the permanent records of the Village, of proposed amendments to Chapter 5 (Supplementary Regulations) of the Zoning Code, relating to food truck regulations.
2. No dumping of grease in the Village storm or sanitary sewer.
3. For food truck hours and duration, Staff to provide final language to address Plan Commission concerns.
4. To item 12 add "unless expressly approved by the Village" to the end of the sentence.
5. Strike final sentence from item #10.

Seconded by Commissioner Arango, the motion carried on a roll call vote with Commission members Dawson, Arango, Brown, Kreuzer, Saeed, Thakkar and Wyant and Chairperson Loftus voting, "Yes."

Director Scott related that tobacco shops and vape stores are currently permitted uses in the C3 District, which is entirely along Roosevelt Road, and that it is proposed to reclassify them as special uses. While saying these are fine businesses that serve a need, Director Scott said they have a connotation to them that goes along with garish signs, names and lighting, and that complaints received are being addressed.

Mr. Saeed asked if verbiage "and other places of worship" be added to references to churches and temples. Commissioner Wyant asked where dispensaries fit in, to which Director Scott replied they aren't permitted. Trustee Thompson interjected that medical use is permitted, but not recreational. Commissioner Dawson moved for the following:

After conducting a public hearing and deliberating on the requests of the petitioner, the Village of Glen Ellyn, for approval of proposed amendments to Chapter 4 (District Regulations) of the Glen Ellyn Zoning Code, the Plan Commission hereby recommends:

1. Approval as discussed or amended at the Plan Commission public hearing on March 9, 2023, which are hereby incorporated into the Motions by reference as though fully set forth herein, and a copy of which will be attached to the minutes of this meeting and kept on file as part of the permanent records of the Village, of proposed amendments to Chapter 4 (District Regulations) of the Zoning Code, relating to tobacco, vape, and smoke shop regulations.
2. Add to item 10-4-15 (B5) "or other places of worship."
3. Add to item 10-4-15 (E1) "or other places of worship."

Seconded by Commissioner Saeed, the motion passed on a roll call vote with Commission members Dawson, Saeed, Arango, Brown, Kreuzer, Thakkar and Wyant and Chairperson Loftus voting, "Yes."

A motion to close the Public Hearing was made by Commissioner Saeed; seconded by Commissioner Wyant, the motion passed by voice vote.

<u>Official Zoning Map</u>

Sr. Planner Fard explained that the Illinois Compiled Statutes require that the Village publish an updated Zoning Map by April 1st of each year. This update, she explicated, typically includes annexations, zoning map amendments, and the correction of any platting errors. Staff, she said, requests the Plan Commission review and make a recommendation regarding the Official Zoning Map of 2023 to the Village Board. She proceeded to describe the changes to the map adopted by the Village Board in 2022:

Harding Glen Townhomes: This is a zoning map amendment and a re-subdivision for a 23-unit residential townhome development to be known as Harding Townhomes. The property was rezoned from R2 Residential to R4 Multi-family Development District.

413 N. Main Street: The ordinance rezoned an area of the building from the C5A to C5B to accommodate the redevelopment of the back half of the existing building on the property to accommodate 12 loft-style apartments. (C5A, she noted, doesn't allow apartment use on the first floor.)

Glen Estates Subdivision: P.J. Murphy sub-divided a big lot into eight lots, seven of which will include single-family homes, a process underway.

Arboretum Estates East: This change encompasses the annexation of 28 properties, which were added to the map.

She outlined Plan Commission action on the Official Zoning Map for 2023. Chairperson Loftus declared that the recommendation is, "Let's go with it."

Trustee's Report

Trustee Thompson said the Board is engaged in multiple Village initiatives, listing the Streetscape, the train station, the US Bank property, the hotel site, the Comprehensive Plan and the McKee House, Glenwood Station, Apex garage, and the Katy's site. He invited questions.

Staff Report

Sr. Planner Fard said there are several cases under review, but nothing scheduled for the March meeting. Commissioner Dawson expressed that he'd rather attend an additional meeting than have to endure an exceptionally long one.

Adjournment

Chairperson Loftus adjourned the meeting at 10:40 p.m., following passage by voice vote of a motion by Commissioner Thakkar and seconded by Commissioner Saeed.

Respectfully submitted,

Barbara Dutton-Thomas, Recording Secretary

(DRAFT) MOTION TO RECOMMEND APPROVAL OF PROPOSED AMENDMENTS TO CHAPTER 2 (DEFINITIONS) AND CHAPTER 5 (SUPPLEMENTARY REGULATIONS) OF THE ZONING CODE, AND TITLE 6 (POLICE REGULATIONS) OF THE GLEN ELLYN VILLAGE CODE.

After conducting a public hearing and deliberating on the requests of the petitioner, the Village of Glen Ellyn, for approval of proposed amendments to Chapter 2 (Definitions) and Chapter 5 (Supplementary Regulations) of the Zoning Code, and Title 6 (Police Regulations) of the Glen Ellyn Village Code, the Plan Commission hereby recommends:

1. Approval as discussed or amended at the Plan Commission public hearing on March 9, 2023, (and subsequently consideration on April 27, 2023 and May 25, 2023), which are hereby incorporated into the Motions by reference as though fully set forth herein, and a copy of which will be attached to the minutes of this meeting and kept on file as part of the permanent records of the Village, of proposed amendments to Chapter 2 (Definitions) and Chapter 5 (Supplementary Regulations) of the Zoning Code, as well as Title 6 (Police Regulations) of the Glen Ellyn Village Code, relating to keeping of hens regulations.

Motion by: _____ Seconded by: _____