Agenda
Village of Glen Ellyn
Regular Meeting
Monday, February 11, 2019
7:00 PM
Glen Ellyn Civic Center, Galligan Board Room

Village Board Meeting Procedures Statement

Visitors are most welcome to attend all meetings of the Village Board and can find copies of the Agenda on their chairs or online at www.glenellyn.org prior to the meeting. Meetings are taped and also televised on WideOpenWest Channel 6, AT&T Channel 99, and Comcast Cable Services Channel 10. Any individual with a disability requiring a reasonable accommodation in order to participate in a meeting should contact The Village of Glen Ellyn ADA Coordinator, 630-469-5000, at least five (5) business days in advance of the next scheduled meeting. All matters on the Agenda may be discussed, amended, and acted upon.

A. Call to Order

B. Pledge of Allegiance

C. Roll Call

D. Village Recognition: (Village Clerk)

1. Village Planner Purvis and the Zoning Board of Appeals received a thank you letter from a resident for their diligence while assisting with a public hearing regarding their home.

2. The Public Works Department received several compliments for their dedication to making roads safe during the recent winter storms.

E. Audience Participation

1. Open:

   Members of the public are welcome to speak to any item not specifically listed on tonight's agenda for up to (3) three minutes. For those items which are on tonight's agenda, the public will have the opportunity to comment at the time the item is discussed. In either case, please complete the Audience Participation form and turn it in to the Village Clerk. It is requested that, if possible, one spokesman for a group be appointed to present the views of the entire group. Speakers who are recognized are requested to step to a microphone and state their name, their topic and the group, if any, they are representing prior to addressing the Village Board. Individuals wishing to address the Board shall exercise proper decorum and respect for the proceedings and the business of the Village Board, and shall refrain from abusive demeanor and language. The practice of ceding time to other speakers shall be prohibited, except in the discretion of the presiding officer of the meeting. Public officials are not obligated to respond to questions.

F. Consent Agenda - The following items are considered routine business by the Village Board and will be approved in a single vote in the form listed below:

Motion to approve the following items including Payroll and Vouchers totaling $1,361,002.42 (Trustee Ladesic):

1. Total Expenditures (Payroll and Vouchers) - $1,361,002.42. The vouchers have been reviewed by Manager Franz prior to this meeting, and are consistent with the Village's purchasing policy.

2. January 22, 2019 Regular Board Workshop Minutes

3. January 28, 2019 Regular Board Meeting Minutes

4. Waive competitive bidding and approve the purchase of a fixed LPR camera system from Minuteman Security Technologies in the amount of $47,958.68 to be expensed to the Forfeiture Fund and waive competitive bidding and approve the purchase of a LPR parking enforcement camera system from Minuteman Security Technologies in the amount of $46,783.00 to be expensed to the Parking Fund (Police Chief Norton)

5. Waive competitive bidding and approve the purchase of two electronic kiosks from Total Parking Solutions in the amount of $23,100 to be expensed to the Parking Fund (Police Chief Norton)

6. Motion pursuant to Section 1-10-7 of the Glen Ellyn Village Code to adopt the competitive bidding procedures of the U.S. Communities Program in lieu of the provisions of Chapter 10 on Village Contracts and approve Purchase of 65 LED Street Light Fixtures for Residential Streets in the amount of $24,938, to be expensed to the General Fund (Public Works Director Hansen)

7. Waive competitive bidding and approve emergency repair service by John Neri Company, in an amount not-to-exceed $24,000 and approve future repair service by John Neri Company, in an amount not-to-exceed $21,000, to be expensed to the Water & Sanitary Sewer Fund (Public Works Director Hansen)

8. Waive competitive bidding for a purchase which requires individual skill or expertise, which is an authorized exception in Section 1-10-2 of the Village Code and approve an amount not to exceed $45,000 to commission Max-Cast, Inc. of Kalona, Iowa to build a bronze replica of the Horse Trough built as a water fountain and refurbish the original Horse Trough, to be expensed to the Capital Projects Fund (Public Works Director Hansen)

9. Resolution No. 19-03, A Resolution Adopting the Village of Glen Ellyn Complete Streets Policy (Public Works Director Hansen)

G. Raising Cane (Presented by Planning and Development Director Springer) (Trustee Ladesic)

1. Ordinance No. 6673, An Ordinance Approving a Special Use Permit, Variations from the Zoning Code, and Variations from the Sign Code for the Construction and Operation of a Raising Cane's Chicken Fingers Restaurant with a Drive-thru Proposed on Property Commonly Known as 495-499 Roosevelt Road

H. Reminders

1. A Village Board Workshop is scheduled for Tuesday, February 19, 2019 at 7:00PM in Room 301 of the Glen Ellyn Civic Center.

2. A Village Board Meeting is scheduled for Monday, February 25, 2019 at 7:00PM in the Galligan Board Room of the Glen Ellyn Civic Center.

I. Other Business

J. Adjournment

Glen Ellyn Village Board
535 Duane Street
Glen Ellyn, IL 60137

Meeting: 02/11/19 07:00 PM
Department: Finance
Department Head: Christina Coyle
Category: Vouchers
Prepared By: Lori Thomas

SCHEDULED

AGENDA ITEM (ID # 3804) DOC ID: 3804

Total Expenditures (Payroll and Vouchers) - $1,361,002.42. The vouchers have been reviewed by Manager Franz prior to this meeting, and are consistent with the Village's purchasing policy.

Please see the attached report.

ATTACHMENTS:

- Vouchers 2019-02-11 (PDF)

Approval of Vouchers
For the Village Board Meeting of February 11, 2019

EXPENDITURES:

Accounts Payable Warrant 0119-4	1/25/2019	$57,168.97		
Accounts Payable Warrant 0119-5	1/31/2019	$349,757.60		
Accounts Payable Warrant 0219-1	2/1/2019	$391,793.86		
Sub-Total		**$798,720.43**	**Warrant Total**	**$798,720.43**

PAYROLL EXPENDITURES

		February 1, 2019		
Net Employee Payroll Checks	$	351,241.96		
Employee & Employer Payroll Deductions:				
Employee Deductions*	$	161,140.72		
IMRF - Employer contribution	$	20,566.57		
Social Security/Medicare Tax Withheld - Employer portion	$	29,332.74		
Total Payroll	**$**	**562,281.99**	**$**	**562,281.99**

GRAND TOTAL **$1,361,002.42**

* Employee deductions include contributions for pensions, health insurance, union dues and other employee directed deductions such as tax withholdings, 457 & 125 plan contributions and supplemental life insurance.

02/01/2019 13:19 | VILLAGE OF GLEN ELLYN | P 1
lthomas | VENDOR INVOICE LIST | apinvlst

DOCUMENT	P.O.	INV DATE	VOUCHER	WARRANT	CHECK #	INVOICE NET	DUE DATE	TYPE	STS	INVOICE DESCRIPTION
11488 3/7 PATHWAY CAFE LLC										
94428		01/05/2019		0219-1	234251	266.75	01/31/2019	INV	PD	SUPERVISOR MEETING 1/17/19
INVOICE:3705			CHECKDATE:02/01/2019							
2007 AHEAD INC.										
94124		01/16/2019		0119-4	234195	1,058.60	01/22/2019	INV	PD	PRODUCT RESALE
INVOICE:INV0396263			CHECKDATE:01/25/2019							
94125		01/16/2019		0119-4	234195	1,285.05	01/22/2019	INV	PD	PRODUCT RESALE
INVOICE:INV0396272			CHECKDATE:01/25/2019							
						2,343.65				
10480 ARAMARK UNIFORM & CAREER APPAREL GROUP, INC										
94108		12/25/2018		0119-4	234196	1,030.87	01/22/2019	INV	PD	LINEN SERVICE
INVOICE:2081852188			CHECKDATE:01/25/2019							
94123		01/15/2019		0119-4	234196	899.92	01/22/2019	INV	PD	LINEN SERVICE
INVOICE:2081880195			CHECKDATE:01/25/2019							
						1,930.79				
65 AT&T										
94121		01/22/2019		0119-4	234197	500.00	01/22/2019	INV	PD	CR199150 GARAGE CONSTRUCTION E
INVOICE:12219			CHECKDATE:01/25/2019							
94335		01/16/2019		0219-1	234252	63.59	01/29/2019	INV	PD	630 Z99-0131 540 7 0119
INVOICE:630Z99013101-6			CHECKDATE:02/01/2019							
						563.59				
8254 AUTOMATIC SYSTEMS CO										
94417		12/18/2018		0219-1	234253	181.13	01/31/2019	INV	PD	CABLES, SWITCHES
INVOICE:33025S			CHECKDATE:02/01/2019							
1725 BRIAN D BECK										
94337		01/12/2019		0219-1	234254	24.99	01/29/2019	INV	PD	SCALE REIMBURSEMENT
INVOICE:ER012919			CHECKDATE:02/01/2019							
11487 JOHN A PHILLIPS										
94336		01/12/2019		0219-1	234255	800.00	01/29/2019	INV	PD	INTERNET TRAINING
INVOICE:A92F9C			CHECKDATE:02/01/2019							
11482 ROBERT CAHILL										
94212		01/23/2019		0119-4	234198	20.00	01/23/2019	INV	PD	BUSINESS REGISTRATION OVERPAYM
INVOICE:12319			CHECKDATE:01/25/2019							
120 CANON SOLUTIONS AMERICA, INC										
94394		01/13/2019		0219-1	234256	277.32	01/29/2019	INV	PD	COPIER IRC3530 MAINT
INVOICE:19620516			CHECKDATE:02/01/2019							
94376		01/13/2019		0219-1	234256	117.00	01/17/2019	INV	PD	COPIER IR4225 MAINT

DOCUMENT	P.O.	INV DATE	VOUCHER	WARRANT	CHECK #	INVOICE NET	DUE DATE	TYPE	STS	INVOICE DESCRIPTION
INVOICE:19637104		CHECKDATE:02/01/2019								
						394.32				
10505 CDM SMITH INC										
94306	20170019	01/15/2019		0219-1	234257	23,194.07	01/28/2019	INV	PD	METRA DESIGN, PHASE I ENGINEER
INVOICE:90064660/5		CHECKDATE:02/01/2019								
11084 CHASE BANK NA										
94400		01/31/2019		0119-5	22007	1,456.89	01/31/2019	DIR	PD	DUE FROM GWA JAN 2019
INVOICE:13119		CHECKDATE:01/31/2019								
94401		01/31/2019		0119-5	22008	10,358.22	01/31/2019	DIR	PD	DUE FROM LIBRARY JAN 2019
INVOICE:13119-1		CHECKDATE:01/31/2019								
892124		01/07/2019		0119-5	21895	16.00	01/21/2019	DIR	PD	QUALITY BLUEPRINT-COPIES
INVOICE:ACOA-4		CHECKDATE:01/23/2019								
892147		01/07/2019		0119-5	21896	342.00	01/21/2019	DIR	PD	A RELIABLE-HOLIDAY GIFT CARD H
INVOICE:ALLN-27		CHECKDATE:01/23/2019								
94181		01/07/2019		0119-5	21897	151.42	01/21/2019	DIR	PD	GARVEYS-OFFICE SUPPLIES
INVOICE:ALLN-28		CHECKDATE:01/23/2019								
892014		01/07/2018		0119-5	21898	290.99	01/21/2019	DIR	PD	AMAZON-TIME CLOCK
INVOICE:BBAL-5		CHECKDATE:01/23/2019								
892157		01/07/2019		0119-5	21899	141.46	01/21/2019	DIR	PD	AMAZON-ELECTRIC STAPLER, RJ11
INVOICE:BINM-20		CHECKDATE:01/23/2019								
94182		01/07/2019		0119-5	21900	108.40	01/21/2019	DIR	PD	ROAR POSTAL-METER SUPPLIES
INVOICE:BINM-21		CHECKDATE:01/23/2019								
892086		01/07/2019		0119-5	21901	335.00	01/21/2019	DIR	PD	DAILY HERALD-GWA JOB AD
INVOICE:BROP-14		CHECKDATE:01/23/2019								
892167		01/07/2019		0119-5	21870	1,000.00	01/21/2019	DIR	PD	APWA-MEETING 20 ATTENDEES
INVOICE:BUCD-33		CHECKDATE:01/23/2019								
94163		01/07/2019		0119-5	21871	77.87	01/21/2019	DIR	PD	AMAZON-PHONE CASES
INVOICE:BUCD-34		CHECKDATE:01/23/2019								
94164		01/07/2019		0119-5	21872	1,585.00	01/21/2019	DIR	PD	IL ARBORIST ASSN-TRAINING
INVOICE:BUCD-35		CHECKDATE:01/23/2019								
94165		01/07/2019		0119-5	21873	67.50	01/21/2019	DIR	PD	RUSSO POWER-SIGN POST POUNDER
INVOICE:BUCD-36		CHECKDATE:01/23/2019								
94166		01/07/2019		0119-5	21874	242.06	01/21/2019	DIR	PD	DTN-WEATHER SERVICE
INVOICE:BUCD-37		CHECKDATE:01/23/2019								
892175		01/07/2019		0119-5	21902	32.99	01/21/2019	DIR	PD	AMAZON-DOOR CHIME
INVOICE:CAMM-13		CHECKDATE:01/23/2019								
94183		01/07/2019		0119-5	21903	154.98	01/21/2019	DIR	PD	SHIP STICKS-CLUB SHIPPING
INVOICE:CAMM-14		CHECKDATE:01/23/2019								
892107		01/07/2019		0119-5	21904	75.00	01/21/2019	DIR	PD	GE CHAMBER-CHAMBER E-BLAST
INVOICE:CHAB-69		CHECKDATE:01/23/2019								
94184		01/07/2019		0119-5	21905	95.94	01/21/2019	DIR	PD	BINNY'S-WINE FOR BANQUET
INVOICE:CHAB-70		CHECKDATE:01/23/2019								
94185		01/07/2019		0119-5	21906	178.80	01/21/2019	DIR	PD	JEWEL-FOOD, HOH COOKIES, PLATE
INVOICE:CHAB-71		CHECKDATE:01/23/2019								
94186		01/07/2019		0119-5	21907	100.00	01/21/2019	DIR	PD	N2 PUBLISHING-ADVERTISING
INVOICE:CHAB-72		CHECKDATE:01/23/2019								
94187		01/07/2019		0119-5	21908	7.99	01/21/2019	DIR	PD	POSTER MY WALL-GRAPHIC DESIGN
INVOICE:CHAB-73		CHECKDATE:01/23/2019								
94188		01/07/2019		0119-5	21909	18.50	01/21/2019	DIR	PD	DOLLAR TREE-NYE KIDS TOYS
INVOICE:CHAB-74		CHECKDATE:01/23/2019								
94189		01/07/2019		0119-5	21910	14.99	01/21/2019	DIR	PD	SPOTIFY-MUSIC SERVICE

02/01/2019 13:19 | VILLAGE OF GLEN ELLYN | P 3
lthomas | VENDOR INVOICE LIST | apinvlst

DOCUMENT	P.O.	INV DATE	VOUCHER	WARRANT	CHECK #	INVOICE NET	DUE DATE	TYPE	STS	INVOICE DESCRIPTION
INVOICE:CHAB-75		CHECKDATE:01/23/2019								
94190		01/07/2019		0119-5	21911	28.00	01/21/2019	DIR	PD	PATCH-E-BLAST
INVOICE:CHAB-76		CHECKDATE:01/23/2019								
94191		01/07/2019		0119-5	21912	296.84	01/21/2019	DIR	PD	PARTY CITY-NYE KIDS TOYS
INVOICE:CHAB-77		CHECKDATE:01/23/2019								
94193		01/07/2019		0119-5	21914	441.56	01/21/2019	DIR	PD	COMCAST-DEC/JAN
INVOICE:CHAB-78		CHECKDATE:01/23/2019								
94192		01/07/2019		0119-5	21913	88.70	01/21/2019	DIR	PD	FACEBOOK-ADVERTISING
INVOICE:CHAB-79		CHECKDATE:01/23/2019								
891936		01/07/2019		0119-5	21875	77.55	01/21/2019	DIR	PD	AMAZON-COAT HOOKS, FOLDERS
INVOICE:COYC-15		CHECKDATE:01/23/2019								
94167		01/07/2019		0119-5	21876	30.00	01/21/2019	DIR	PD	PAYFLOW-ONLINE BILL PAY
INVOICE:COYC-16		CHECKDATE:01/23/2019								
94168		01/07/2019		0119-5	21877	103.71	01/21/2019	DIR	PD	JASON'S PIZZA-HOLIDAY LUNCH BE
INVOICE:COYC-17		CHECKDATE:01/23/2019								
94169		01/07/2019		0119-5	21878	91.53	01/21/2019	DIR	PD	JAVIS BURRITOS-HOLIDAY LUNCH E
INVOICE:COYC-18		CHECKDATE:01/23/2019								
94170		01/07/2019		0119-5	21879	35.10	01/21/2019	DIR	PD	FEDEX-MAILING OF BOND DOCUMENT
INVOICE:COYC-19		CHECKDATE:01/23/2019								
891947		01/07/2019		0119-5	21997	7.49	01/21/2019	DIR	PD	KOHL'S-HOLIDAY TRIVIA GIFT
INVOICE:DAVS-14		CHECKDATE:01/28/2019								
94398		01/07/2019		0119-5	22005	35.00	01/21/2019	DIR	PD	DOLLAR TREE-HOLIDAY PARTY, TRI
INVOICE:DAVS-15		CHECKDATE:01/31/2019								
94399		01/07/2019		0119-5	22006	26.42	01/21/2019	DIR	PD	JEWEL-HOLIDAY PARTY SUPPLIES
INVOICE:DAVS-16		CHECKDATE:01/31/2019								
892057		01/07/2019		0119-5	21867	61.93	01/21/2019	DIR	PD	HOBBY LOBBY-FRAMES, CANDLES
INVOICE:DETA-64		CHECKDATE:01/21/2019								
94104		01/07/2019		0119-5	21868	747.91	01/21/2019	DIR	PD	AMAZON-INADVERT CHG, LAPTOP, C
INVOICE:DETA-65		CHECKDATE:01/21/2019								
94105		01/07/2019		0119-5	21869	273.56	01/21/2019	DIR	PD	VISTAPRINT-BUS CARDS, MAILING
INVOICE:DETA-66		CHECKDATE:01/21/2019								
94301		01/07/2019		0119-5	21992	14.99	01/21/2019	DIR	PD	ADOBE-PRO SOFTWARE
INVOICE:DETA-67		CHECKDATE:01/28/2019								
94302		01/07/2019		0119-5	21993	405.00	01/21/2019	DIR	PD	EVENTECTIVE-ONLINE MARKETING
INVOICE:DETA-68		CHECKDATE:01/28/2019								
94303		01/07/2019		0119-5	21994	500.00	01/21/2019	DIR	PD	GOOGLE-ADVERTISING
INVOICE:DETA-69		CHECKDATE:01/28/2019								
94304		01/07/2019		0119-5	21995	150.00	01/21/2019	DIR	PD	TRIPLESEAT-BANQUET SOFTWARE
INVOICE:DETA-70		CHECKDATE:01/28/2019								
94305		01/07/2019		0119-5	21996	235.00	01/21/2019	DIR	PD	SHERLOCK SQUEEGY-WINDOW CLEANI
INVOICE:DETA-71		CHECKDATE:01/28/2019								
919813		01/07/2019		0119-5	21915	39.35	01/21/2019	DIR	PD	JEWEL-FOOD RESALE
INVOICE:FOTT-16		CHECKDATE:01/23/2019								
94194		01/07/2019		0119-5	21916	161.98	01/21/2019	DIR	PD	AMAZON-SALAD SPINNER, SCOOPS
INVOICE:FOTT-17		CHECKDATE:01/23/2019								
94195		01/07/2019		0119-5	21917	242.62	01/21/2019	DIR	PD	MIDWEST IMPORTS-NYE PASTRIES
INVOICE:FOTT-18		CHECKDATE:01/23/2019								
94196		01/07/2019		0119-5	21918	5.99	01/21/2019	DIR	PD	ECOLAB-SUPPLIES
INVOICE:FOTT-19		CHECKDATE:01/23/2019								
892187		01/07/2019		0119-5	21919	79.71	01/21/2019	DIR	PD	AHWLLC-MOWER DECK BLADES #253
INVOICE:FRAF-33		CHECKDATE:01/23/2019								
94197		01/07/2019		0119-5	21920	68.40	01/21/2019	DIR	PD	APEX MATERIAL-SPRING #632
INVOICE:FRAF-34		CHECKDATE:01/23/2019								
94198		01/07/2019		0119-5	21921	85.05	01/21/2019	DIR	PD	IL TOLLWAY-IPASS
INVOICE:FRAF-35		CHECKDATE:01/23/2019								

02/01/2019 13:19 | VILLAGE OF GLEN ELLYN | P 4
lthomas | VENDOR INVOICE LIST | apinvlst

DOCUMENT	P.O.	INV DATE	VOUCHER	WARRANT	CHECK #	INVOICE NET	DUE DATE	TYPE	STS	INVOICE DESCRIPTION
94199		01/07/2019		0119-5	21922	54.68	01/21/2019	DIR	PD	LOMBARD TOYOTA-SWITCH ASSY
INVOICE:FRAF-36			CHECKDATE:01/23/2019							
892197		01/07/2019		0119-5	21965	25.99	01/21/2019	DIR	PD	DANBY'S-VESEVICK MEETING
INVOICE:FRAM-42			CHECKDATE:01/25/2019							
94279		01/07/2019		0119-5	21966	39.56	01/21/2019	DIR	PD	ELLYN'S TAP-HANSEN MEETING
INVOICE:FRAM-43			CHECKDATE:01/25/2019							
94280		01/07/2019		0119-5	21967	26.09	01/21/2019	DIR	PD	SHANNON'S-KAMINSKY MEETING
INVOICE:FRAM-44			CHECKDATE:01/25/2019							
94281		01/07/2019		0119-5	21968	45.35	01/21/2019	DIR	PD	MAIZE & MASH-HOLMER MEETING
INVOICE:FRAM-45			CHECKDATE:01/25/2019							
94282		01/07/2019		0119-5	21969	230.00	01/21/2019	DIR	PD	GLEN PRAIRIE-ADMIN DEPT MEETIN
INVOICE:FRAM-46			CHECKDATE:01/25/2019							
94283		01/07/2019		0119-5	21970	42.72	01/21/2019	DIR	PD	MAIN ST PUB-COYLE MEETING
INVOICE:FRAM-47			CHECKDATE:01/25/2019							
94284		01/07/2019		0119-5	21971	117.86	01/21/2019	DIR	PD	GLEN OAK-NORTON MTG, PW & UP M
INVOICE:FRAM-48			CHECKDATE:01/25/2019							
891997		01/07/2019		0119-5	21880	45.00	01/21/2019	DIR	PD	CONSTANT CONTACT-EMAIL MARKETI
INVOICE:HANM-20			CHECKDATE:01/23/2019							
94171		01/07/2019		0119-5	21881	245.00	01/21/2019	DIR	PD	RETAIL LIVE-TRAINING EVENT
INVOICE:HANM-21			CHECKDATE:01/23/2019							
892217		01/07/2019		0119-5	21923	79.63	01/21/2019	DIR	PD	AMAZON-INADVERTANT CHARGE
INVOICE:HEFJ-13			CHECKDATE:01/23/2019							
94200		01/07/2019		0119-5	21924	241.96	01/21/2019	DIR	PD	EB ASSOCIATES-SENIOR CONFERENC
INVOICE:HEFJ-14			CHECKDATE:01/23/2019							
891984		01/07/2019		0119-5	21889	35.62	01/21/2019	DIR	PD	HOME DEPOT-SLEDGE HAMMER
INVOICE:HOLC-10			CHECKDATE:01/23/2019							
94176		01/07/2019		0119-5	21890	2.69	01/21/2019	DIR	PD	LEN'S-TAPE
INVOICE:HOLC-11			CHECKDATE:01/23/2019							
94177		01/07/2019		0119-5	21891	22.00	01/21/2019	DIR	PD	MARATHON-FUEL PTI TRIP
INVOICE:HOLC-12			CHECKDATE:01/23/2019							
892225		01/07/2019		0119-5	21925	33.56	01/21/2019	DIR	PD	LINKS-G HEIGHT AVM MEETING
INVOICE:HOLW-11			CHECKDATE:01/23/2019							
94201		01/07/2019		0119-5	21926	50.23	01/21/2019	DIR	PD	GLEN OAK-FIRE CO MEETING
INVOICE:HOLW-12			CHECKDATE:01/23/2019							
94202		01/07/2019		0119-5	21927	34.14	01/21/2019	DIR	PD	PANERA-PARKING GARAGE CONTRACT
INVOICE:HOLW-13			CHECKDATE:01/23/2019							
94203		01/07/2019		0119-5	21928	37.40	01/21/2019	DIR	PD	THIPI THAI-SENIOR SVCS STAFF M
INVOICE:HOLW-14			CHECKDATE:01/23/2019							
892235		01/07/2019		0119-5	21929	19.99	01/21/2019	DIR	PD	RUBBER STAMPS.COM-OFFICE SUPPL
INVOICE:HORK-10			CHECKDATE:01/24/2019							
94234		01/07/2019		0119-5	21930	45.00	01/21/2019	DIR	PD	JEWEL-HOLIDAY LUNCH SUPPLIES
INVOICE:HORK-11			CHECKDATE:01/24/2019							
94235		01/07/2019		0119-5	21931	8.22	01/21/2019	DIR	PD	RUSSO POWER-PARTS
INVOICE:HORK-12			CHECKDATE:01/24/2019							
94236		01/07/2019		0119-5	21932	15.19	01/21/2019	DIR	PD	AMAZON-SUPPLIES
INVOICE:HORK-13			CHECKDATE:01/24/2019							
94237		01/07/2019		0119-5	21933	528.00	01/21/2019	DIR	PD	HOME DEPOT-RATCHET KITS
INVOICE:HORK-14			CHECKDATE:01/24/2019							
94238		01/07/2019		0119-5	21934	96.00	01/21/2019	DIR	PD	JASON'S-HOLIDAY LUNCH
INVOICE:HORK-15			CHECKDATE:01/24/2019							
94239		01/07/2019		0119-5	21935	325.00	01/21/2019	DIR	PD	BARONES-HOLIDAY LUNCH
INVOICE:HORK-16			CHECKDATE:01/24/2019							
892067		01/07/2019		0119-5	21936	54.32	01/21/2019	DIR	PD	AMAZON-PHONE ACCESSORIES
INVOICE:HUBJ-11			CHECKDATE:01/24/2019							
94179		01/07/2019		0119-5	21892	80.68	01/21/2019	DIR	PD	JASON'S PIZZA-REIMBURSED ROTAR

02/01/2019 13:19 | VILLAGE OF GLEN ELLYN | P 5
lthomas | VENDOR INVOICE LIST | apinvlst

DOCUMENT	P.O.	INV DATE	VOUCHER	WARRANT	CHECK #	INVOICE NET	DUE DATE	TYPE	STS	INVOICE DESCRIPTION
INVOICE:JAGM-1		CHECKDATE:01/23/2019								
892097		01/07/2019		0119-5	21937	484.43	01/21/2019	DIR	PD	AMAZON-SUPPLIES
INVOICE:KAML-31		CHECKDATE:01/24/2019								
94240		01/07/2019		0119-5	21938	19.21	01/21/2019	DIR	PD	JEWEL-HOLIDAY PARTY PRIZES
INVOICE:KAML-32		CHECKDATE:01/24/2019								
94241		01/07/2019		0119-5	21939	69.62	01/21/2019	DIR	PD	FLORAL DELIGHTS-GONZALEZ SYMPA
INVOICE:KAML-33		CHECKDATE:01/24/2019								
94242		01/07/2019		0119-5	21940	105.00	01/21/2019	DIR	PD	IL MUNICIPAL LEAGUE-PUBLICATIO
INVOICE:KAML-34		CHECKDATE:01/24/2019								
94243		01/07/2019		0119-5	21941	72.94	01/21/2019	DIR	PD	GREEN BRANCH-ALLEN BABY
INVOICE:KAML-35		CHECKDATE:01/24/2019								
94244		01/07/2019		0119-5	21942	16.99	01/21/2019	DIR	PD	WALMART-UTTERBACK RETIRE GIFT
INVOICE:KAML-36		CHECKDATE:01/24/2019								
94245		01/07/2019		0119-5	21943	150.00	01/21/2019	DIR	PD	GE CHAMBER-LUNCHEON MF, MH,MP,
INVOICE:KAML-37		CHECKDATE:01/24/2019								
94246		01/07/2019		0119-5	21944	47.97	01/21/2019	DIR	PD	STAMP MAKER-OFFICE SUPPLIES
INVOICE:KAML-38		CHECKDATE:01/24/2019								
94247		01/07/2019		0119-5	21945	225.00	01/21/2019	DIR	PD	NIU OUTREACH-ILCMA CONF FRANZ
INVOICE:KAML-39		CHECKDATE:01/24/2019								
94248		01/07/2019		0119-5	21946	18.99	01/21/2019	DIR	PD	DUNKIN DONUTS-COFFEE
INVOICE:KAML-40		CHECKDATE:01/24/2019								
94251		01/07/2019		0119-5	21949	25.48	01/21/2019	DIR	PD	HOME DEPOT-PLANTER LINERS
INVOICE:LUDM-100		CHECKDATE:01/24/2019								
94252		01/07/2019		0119-5	21950	131.71	01/21/2019	DIR	PD	AGRI DIRECT-EQUIP PARTS
INVOICE:LUDM-101		CHECKDATE:01/24/2019								
94253		01/07/2019		0119-5	21951	49.77	01/21/2019	DIR	PD	PARTS TREE-AIR INTAKE
INVOICE:LUDM-102		CHECKDATE:01/24/2019								
94254		01/07/2019		0119-5	21952	1,134.23	01/21/2019	DIR	PD	R&R PRODUCTS-EQUIP PARTS
INVOICE:LUDM-103		CHECKDATE:01/24/2019								
94255		01/07/2019		0119-5	21953	139.77	01/21/2019	DIR	PD	SCHAEFFERS-GREASE
INVOICE:LUDM-104		CHECKDATE:01/24/2019								
94257		01/07/2019		0119-5	21954	322.82	01/21/2019	DIR	PD	REINDERS-EQUIP PARTS
INVOICE:LUDM-105		CHECKDATE:01/24/2019								
94258		01/07/2019		0119-5	21955	100.00	01/21/2019	DIR	PD	GCSAA-MEMBERSHIP SCHWARTZ
INVOICE:LUDM-106		CHECKDATE:01/24/2019								
94259		01/07/2019		0119-5	21956	200.00	01/21/2019	DIR	PD	U OF I-PESTICIDE CERTIFICATION
INVOICE:LUDM-107		CHECKDATE:01/24/2019								
94260		01/07/2019		0119-5	21957	175.83	01/21/2019	DIR	PD	MCMASTER CARR-PARTS, BAGS
INVOICE:LUDM-108		CHECKDATE:01/24/2019								
94261		01/07/2019		0119-5	21958	645.16	01/21/2019	DIR	PD	BURRIS-MOWER PARTS
INVOICE:LUDM-109		CHECKDATE:01/24/2019								
94262		01/07/2019		0119-5	21959	125.00	01/21/2019	DIR	PD	MAGCS-ANNUAL MEMBERSHIP
INVOICE:LUDM-110		CHECKDATE:01/24/2019								
94263		01/07/2019		0119-5	21960	316.15	01/21/2019	DIR	PD	MESSICKS-EQUIP PARTS
INVOICE:LUDM-111		CHECKDATE:01/24/2019								
892257		01/07/2019		0119-5	21947	375.60	01/21/2019	DIR	PD	AUTOMOTIVE WORKWEAR-UNIFORM
INVOICE:LUDM-98		CHECKDATE:01/24/2019								
94250		01/07/2019		0119-5	21948	55.90	01/21/2019	DIR	PD	BATTERIES PLUS-BATTERIES
INVOICE:LUDM-99		CHECKDATE:01/24/2019								
892117		01/07/2019		0119-5	21961	45.39	01/21/2019	DIR	PD	MENARD-ICE MELT, SUPPLIES
INVOICE:MENJ-13		CHECKDATE:01/24/2019								
892267		01/07/2019		0119-5	21856	173.18	01/21/2019	DIR	PD	AMAZON-BATTERIES, PHONE CASE,
INVOICE:MILC-63		CHECKDATE:01/21/2019								
94093		01/07/2019		0119-5	21857	28.00	01/21/2019	DIR	PD	STAPLES-BINDERS
INVOICE:MILC-64		CHECKDATE:01/21/2019								

02/01/2019 13:19 | VILLAGE OF GLEN ELLYN | P 6
lthomas | VENDOR INVOICE LIST | apinvlst

DOCUMENT	P.O.	INV DATE	VOUCHER	WARRANT	CHECK #	INVOICE NET	DUE DATE	TYPE	STS	INVOICE DESCRIPTION
94094		01/07/2019		0119-5	21858	150.00	01/21/2019	DIR	PD	IACP-MEMBERSHIP NORTON
INVOICE:MILC-65			CHECKDATE:01/21/2019							
94095		01/07/2019		0119-5	21859	191.40	01/21/2019	DIR	PD	FEDEX OFFICE-MAP LAMINATION
INVOICE:MILC-66			CHECKDATE:01/21/2019							
94096		01/07/2019		0119-5	21860	38.99	01/21/2019	DIR	PD	WALL ST JOURNAL-SUBSCRIPTION
INVOICE:MILC-67			CHECKDATE:01/21/2019							
94097		01/07/2019		0119-5	21861	24.98	01/21/2019	DIR	PD	PARTY CITY-SUPPLIES
INVOICE:MILC-68			CHECKDATE:01/21/2019							
94098		01/07/2019		0119-5	21862	34.06	01/21/2019	DIR	PD	JEWEL-HOLIDAY SUPPLIES
INVOICE:MILC-69			CHECKDATE:01/21/2019							
94099		01/07/2019		0119-5	21863	222.40	01/21/2019	DIR	PD	3D INNOVATION-CRYSTAL BLOCK BJ
INVOICE:MILC-70			CHECKDATE:01/21/2019							
94100		01/07/2019		0119-5	21864	80.40	01/21/2019	DIR	PD	LILAC BAKERY-COF W/COPS
INVOICE:MILC-71			CHECKDATE:01/21/2019							
94101		01/07/2019		0119-5	21865	114.71	01/21/2019	DIR	PD	VERIZON-NOV/DEC 2018
INVOICE:MILC-72			CHECKDATE:01/21/2019							
94102		01/07/2019		0119-5	21866	50.97	01/21/2019	DIR	PD	EINSTEIN-COF W/COPS
INVOICE:MILC-73			CHECKDATE:01/21/2019							
892073		01/07/2019		0119-5	21888	190.00	01/21/2019	DIR	PD	IAFCI-MEMBERSHIP MONSON, DUFFI
INVOICE:MONJ-3			CHECKDATE:01/23/2019							
892297		01/07/2019		0119-5	21962	306.63	01/21/2019	DIR	PD	AMAZON-SUPPLIES
INVOICE:PEKC-53			CHECKDATE:01/24/2019							
94264		01/07/2019		0119-5	21963	200.00	01/21/2019	DIR	PD	MAGCS-ANNUAL DUES
INVOICE:PEKC-54			CHECKDATE:01/24/2019							
94265		01/07/2019		0119-5	21964	209.90	01/21/2019	DIR	PD	COMCAST-2 MOS SVC NOV-JAN 19
INVOICE:PEKC-55			CHECKDATE:01/24/2019							
892007		01/07/2019		0119-5	21893	59.00	01/21/2019	DIR	PD	SPROUT SOCIAL-SOCIAL MEDIA
INVOICE:PLAM-35			CHECKDATE:01/23/2019							
94180		01/07/2019		0119-5	21894	95.00	01/21/2019	DIR	PD	CONTANT CONTACT-EMAIL MARKETIN
INVOICE:PLAM-36			CHECKDATE:01/23/2019							
927042		01/07/2019		0119-5	21972	22.00	01/21/2019	DIR	PD	DOLLAR TREE-UTTERBACK RETIREME
INVOICE:SPRS-12			CHECKDATE:01/25/2019							
94285		01/07/2019		0119-5	21973	16.33	01/21/2019	DIR	PD	PARTY CITY-UTTERBACK RETIREMEN
INVOICE:SPRS-13			CHECKDATE:01/25/2019							
94286		01/07/2019		0119-5	21974	72.70	01/21/2019	DIR	PD	PAPA SAVERIOS-APEX MEETING
INVOICE:SPRS-14			CHECKDATE:01/25/2019							
94287		01/07/2019		0119-5	21975	145.65	01/21/2019	DIR	PD	JIMMY JOHNS-HOLIDAY LUNCHEON
INVOICE:SPRS-15			CHECKDATE:01/25/2019							
94288		01/07/2019		0119-5	21976	320.00	01/21/2019	DIR	PD	BARONES-UTTERBACK RETIREMENT
INVOICE:SPRS-16			CHECKDATE:01/25/2019							
94290		01/07/2019		0119-5	21977	85.51	01/21/2019	DIR	PD	MAIN ST PUB-UTTERBACK RETIREME
INVOICE:SPRS-17			CHECKDATE:01/25/2019							
892306		01/07/2019		0119-5	21989	351.10	01/21/2019	DIR	PD	CANVAS ON DEMAND-PRINTS
INVOICE:TAVE-14			CHECKDATE:01/25/2019							
94299		01/07/2019		0119-5	21990	15.00	01/21/2019	DIR	PD	STAPLES-BANKERS BOXES
INVOICE:TAVE-15			CHECKDATE:01/25/2019							
94300		01/07/2019		0119-5	21991	160.21	01/21/2019	DIR	PD	CHICKS N SALSA-BJES FAREWELL
INVOICE:TAVE-16			CHECKDATE:01/25/2019							
892025		01/07/2019		0119-5	21882	192.45	01/21/2019	DIR	PD	WPSG-AED SUPPLIES
INVOICE:TERJ-14			CHECKDATE:01/23/2019							
94172		01/07/2019		0119-5	21883	158.61	01/21/2019	DIR	PD	WORLDPOINT-CPR SUPPLIES
INVOICE:TERJ-15			CHECKDATE:01/23/2019							
94173		01/07/2019		0119-5	21884	8.99	01/21/2019	DIR	PD	STAPLES-BADGE CLIPS
INVOICE:TERJ-16			CHECKDATE:01/23/2019							
94174		01/07/2019		0119-5	21885	467.40	01/21/2019	DIR	PD	DASH MEDICAL-SAFETY GLOVES

DOCUMENT	P.O.	INV DATE	VOUCHER	WARRANT	CHECK #	INVOICE NET	DUE DATE	TYPE	STS	INVOICE DESCRIPTION
INVOICE:TERJ-17			CHECKDATE:01/23/2019							
94175		01/07/2019		0119-5	21886	353.04	01/21/2019	DIR	PD	PACIFIC COAST-EAR PIECES
INVOICE:TERJ-18			CHECKDATE:01/23/2019							
892036		01/07/2019		0119-5	21978	75.00	01/21/2019	DIR	PD	IGFOA-SEMINAR
INVOICE:THOL-16			CHECKDATE:01/25/2019							
892316		01/07/2019		0119-5	21887	19.69	01/21/2019	DIR	PD	FARM & FLEET-CABINET WHEELS, H
INVOICE:VAVK-11			CHECKDATE:01/23/2019							
892327		01/07/2019		0119-5	21979	936.00	01/21/2019	DIR	PD	1-2-1 MARKETING-WEBSITE SERVIC
INVOICE:VESJ-48			CHECKDATE:01/25/2019							
94291		01/07/2019		0119-5	21980	14.99	01/21/2019	DIR	PD	ADOBE-PRO SOFTWARE
INVOICE:VESJ-49			CHECKDATE:01/25/2019							
94292		01/07/2019		0119-5	21981	75.00	01/21/2019	DIR	PD	MAILCHIMP-EMAIL SERVICE
INVOICE:VESJ-50			CHECKDATE:01/25/2019							
94293		01/07/2019		0119-5	21982	100.70	01/21/2019	DIR	PD	AT&T-DEC/JAN
INVOICE:VESJ-51			CHECKDATE:01/25/2019							
94294		01/07/2019		0119-5	21983	495.00	01/21/2019	DIR	PD	PELLUCID-GOLF ANALYTICS SUBSCR
INVOICE:VESJ-52			CHECKDATE:01/25/2019							
94295		01/07/2019		0119-5	21984	14.97	01/21/2019	DIR	PD	RESTAURANTOWNER.COM-SUBSCRIPTI
INVOICE:VESJ-53			CHECKDATE:01/25/2019							
94296		01/07/2019		0119-5	21985	-126.00	01/21/2019	CRM	PD	SURVEY PLANET-ONLINE SURVEY RE
INVOICE:VESJ-54			CHECKDATE:01/25/2019							
94297		01/07/2019		0119-5	21986	32.47	01/21/2019	DIR	PD	JOANN FABRIC-SUPPLIES
INVOICE:VESJ-55			CHECKDATE:01/25/2019							
892334		01/07/2019		0119-5	21987	71.00	01/21/2019	DIR	PD	DOLLAR TREE-DARE HOLIDAY PARTY
INVOICE:WEBN-8			CHECKDATE:01/25/2019							
94298		01/07/2019		0119-5	21988	56.92	01/21/2019	DIR	PD	JEWEL-DARE HOLIDAY PARTY SUPPL
INVOICE:WEBN-9			CHECKDATE:01/25/2019							
						35,124.58				
10865 CHICAGO FIRE & BURGLAR DETECTION INC										
94340		01/15/2019		0219-1	234258	89.85	01/29/2019	INV	PD	QTRLY ALARM ESD 2/1-4/30/19
INVOICE:R 49958			CHECKDATE:02/01/2019							
8502 NEW CHICAGO WHOLESALE BAKERY, INC										
94127		01/20/2019		0119-4	234199	77.75	01/22/2019	INV	PD	FOOD RESALE
INVOICE:355582			CHECKDATE:01/25/2019							
6043 CHICAGO PARTS & SOUND LLC										
94342		01/14/2019		0219-1	234259	164.88	01/29/2019	INV	PD	BRAKE PADS, ROTORS
INVOICE:1-00435352			CHECKDATE:02/01/2019							
94343		01/21/2019		0219-1	234259	101.35	01/29/2019	INV	PD	CONTROL ARM #002
INVOICE:1-0046949			CHECKDATE:02/01/2019							
						266.23				
151 CHICAGO TRIBUNE										
94344		01/14/2019		0219-1	234260	188.14	01/29/2019	INV	PD	30055547 POLICE SUBSCRIP THRU
INVOICE:12919			CHECKDATE:02/01/2019							
1076 CINTAS CORPORATION NO 2										
94126		01/14/2019		0119-4	234200	579.54	01/22/2019	INV	PD	CUSTODIAL SUPPLIES

DOCUMENT	P.O.	INV DATE	VOUCHER	WARRANT	CHECK #	INVOICE NET	DUE DATE	TYPE	STS	INVOICE DESCRIPTION
INVOICE:769551645			CHECKDATE:01/25/2019							
94339		01/24/2019		0219-1	234261	78.94	01/29/2019	INV	PD	MAT SERVICE CC
INVOICE:769557095			CHECKDATE:02/01/2019							
94338		01/28/2019		0219-1	234261	53.59	01/29/2019	INV	PD	MAT SERVICE CC
INVOICE:769558609			CHECKDATE:02/01/2019							
94403		01/28/2019		0219-1	234261	626.09	01/31/2019	INV	PD	CUSTODIAL SUPPLIES
INVOICE:769558634			CHECKDATE:02/01/2019							
						1,338.16				
1207 CIVILTECH ENGINEERING, INC.										
94307	20180065	01/04/2019		0219-1	234262	34,510.49	01/28/2019	INV	PD	CBD STREETSCAPE/UTILITY IMP
INVOICE:47286			CHECKDATE:02/01/2019							
9082 COLPO COMMUNICATIONS										
94341		01/12/2019		0219-1	234263	711.89	01/29/2019	INV	PD	ANTENNA KITS
INVOICE:10236			CHECKDATE:02/01/2019							
175 COMMONWEALTH EDISON COMPANY										
94109		01/09/2019		0119-4	234202	34.49	01/22/2019	INV	PD	2217156139 0119
INVOICE:94109			CHECKDATE:01/25/2019							
94110		01/17/2019		0119-4	234201	157.46	01/22/2019	INV	PD	5996086157 0119
INVOICE:94110			CHECKDATE:01/25/2019							
94111		12/14/2018		0119-4	234201	166.76	01/22/2019	INV	PD	5996086157 1218
INVOICE:94111			CHECKDATE:01/25/2019							
94112		01/16/2019		0119-4	234201	567.37	01/22/2019	INV	PD	4145057007 0119
INVOICE:94112			CHECKDATE:01/25/2019							
						926.08				
6610 COMCAST CABLE COMMUNICATIONS, LLC										
94377		01/22/2019		0219-1	234264	174.95	01/22/2019	INV	PD	8771 20 056 0545119 0119
INVOICE:12919			CHECKDATE:02/01/2019							
4876 CONSTELLATION NEWENERGY, INC.										
94308		01/16/2019		0219-1	234265	5,903.51	01/28/2019	INV	PD	7302778-1 DEC 2018
INVOICE:13813099601			CHECKDATE:02/01/2019							
94317		01/16/2019		0219-1	234265	4,660.67	01/28/2019	INV	PD	7302778-1 JAN 2019
INVOICE:13813099601-1			CHECKDATE:02/01/2019							
94267		01/16/2019		0119-4	234203	52.90	01/24/2019	INV	PD	7302778-9 0119
INVOICE:13813130801			CHECKDATE:01/25/2019							
94269		01/16/2019		0119-4	234203	121.01	01/24/2019	INV	PD	7302778-10 0119
INVOICE:13813137301			CHECKDATE:01/25/2019							
94268		01/16/2019		0119-4	234203	16.38	01/24/2019	INV	PD	7302778-13 0119
INVOICE:13813147901			CHECKDATE:01/25/2019							
						10,754.47				
3037 COZZINI BROS INC.										
94129		01/09/2019		0119-4	234204	26.00	01/22/2019	INV	PD	KNIFE SERVICE
INVOICE:C5978559			CHECKDATE:01/25/2019							
94128		01/16/2019		0119-4	234204	26.00	01/22/2019	INV	PD	KNIFE SERVICE

DOCUMENT	P.O.	INV DATE	VOUCHER	WARRANT	CHECK #	INVOICE NET	DUE DATE	TYPE	STS	INVOICE DESCRIPTION
INVOICE:C6007375			CHECKDATE:01/25/2019							
						52.00				
5206 TAYKIT INC										
94402		01/24/2019		0219-1	234266	2,215.00	01/31/2019	INV	PD	LINKS NEWSLETTER
INVOICE:1241903			CHECKDATE:02/01/2019							
6974 CUTTER & BUCK										
94405		01/14/2019		0219-1	234267	2,080.50	01/31/2019	INV	PD	PRODUCT RESALE
INVOICE:94515429			CHECKDATE:02/01/2019							
94404		01/14/2019		0219-1	234267	873.26	01/31/2019	INV	PD	PRODUCT RESALE
INVOICE:94515430			CHECKDATE:02/01/2019							
						2,953.76				
6800 DETROIT SALT COMPANY, LLC										
94318	20180031	01/17/2019		0219-1	234268	13,623.38	01/28/2019	INV	PD	BULK ROCK SALT
INVOICE:79076			CHECKDATE:02/01/2019							
94320	20180031	01/21/2019		0219-1	234268	13,835.58	01/28/2019	INV	PD	BULK ROCK SALT
INVOICE:79290			CHECKDATE:02/01/2019							
						27,458.96				
1097 DLT SOLUTIONS, LLC										
94319	20180079	12/30/2018		0219-1	234269	6,162.30	01/28/2019	INV	PD	AUTOCAD SUBSCRIPTIONS
INVOICE:SI417150			CHECKDATE:02/01/2019							
1917 DULTMEIER SALES LLC										
94345		01/08/2019		0219-1	234270	112.91	01/29/2019	INV	PD	PREWET HOSE VALVES, FITTINGS
INVOICE:3532055			CHECKDATE:02/01/2019							
94346		01/09/2019		0219-1	234270	-19.01	01/09/2019	CRM	PD	CREDIT PART
INVOICE:3532485			CHECKDATE:02/01/2019							
						93.90				
243 DUMEG										
94213		01/07/2019		0219-1	234271	20,800.00	01/23/2019	INV	PD	ANNUAL SHARE
INVOICE:12319			CHECKDATE:02/01/2019							
4217 DUPAGE COUNTY MAJOR CRIMES TASK FORCE										
94214		01/11/2019		0119-4	234205	500.00	01/23/2019	INV	PD	ANNUAL DUES
INVOICE:12319			CHECKDATE:01/25/2019							
250 DUPAGE COUNTY PUBLIC WORKS										
94418		01/16/2019		0219-1	234272	20.88	01/31/2019	INV	PD	10009013-01 0119
INVOICE:94418			CHECKDATE:02/01/2019							
5827 DUPAGE DODGE CHRYSLER JEEP										
94347		01/16/2019		0219-1	234273	68.72	01/16/2019	INV	PD	TPMS SENSOR #642

DOCUMENT	P.O.	INV DATE	VOUCHER	WARRANT	CHECK #	INVOICE NET	DUE DATE	TYPE	STS	INVOICE DESCRIPTION
INVOICE:72066				CHECKDATE:02/01/2019						
255 DUPAGE JUVENILE OFF. ASSN.										
94215		01/22/2019		0119-4	234206	25.00	01/23/2019	INV	PD	ANNUAL LAW UPDATE LUNCH-SCHMID
INVOICE:12319				CHECKDATE:01/25/2019						
3778 EHC INDUSTRIES, INC										
94204		12/26/2018		0119-4	234207	4,500.00	01/23/2019	INV	PD	ASBESTOS TILE REMOVAL
INVOICE:37525				CHECKDATE:01/25/2019						
1078 EQUIFAX INFORMATION SVCS LLC										
94216		01/17/2019		0119-4	234208	25.00	01/23/2019	INV	PD	POLICE INFO SERVICE JAN 2018
INVOICE:5185227				CHECKDATE:01/25/2019						
8327 ETS CORPORATION										
5089852		01/29/2019		0119-5	22001	4,399.07	01/29/2019	DIR	PD	LINKS CC FEES
INVOICE:ETSREC-67				CHECKDATE:01/31/2019						
11334 EURO USA MIDWEST LLC										
94131		01/18/2019		0119-4	234209	757.50	01/22/2019	INV	PD	FOOD RESALE
INVOICE:439111-00				CHECKDATE:01/25/2019						
94406		01/26/2019		0219-1	234274	249.67	01/31/2019	INV	PD	FOOD RESALE
INVOICE:440702-00				CHECKDATE:02/01/2019						
						1,007.17				
2017 ELLIOTT AUTO SUPPLY COMPANY, INC										
94351		01/14/2019		0219-1	234275	116.28	01/16/2019	INV	PD	BRAKE KITS
INVOICE:50-2269480				CHECKDATE:02/01/2019						
94353		01/14/2019		0219-1	234275	134.48	01/16/2019	INV	PD	ROTOR ASSY
INVOICE:62-384785				CHECKDATE:02/01/2019						
94352		01/14/2019		0219-1	234275	220.08	01/16/2019	INV	PD	ROTOR ASSY
INVOICE:63-321242				CHECKDATE:02/01/2019						
						470.84				
301 FEDERAL EXPRESS CORPORATION										
94354		01/23/2019		0219-1	234276	28.50	01/23/2019	INV	PD	1010-8293-8 SHIPPING
INVOICE:6-438-46836				CHECKDATE:02/01/2019						
1726 BRIDGESTONE RETAIL OPERATIONS, LLC										
94349		01/14/2019		0219-1	234277	523.36	01/16/2019	INV	PD	TIRES
INVOICE:265478				CHECKDATE:02/01/2019						
94348		01/15/2019		0219-1	234277	302.84	01/16/2019	INV	PD	TIRES #642
INVOICE:265510				CHECKDATE:02/01/2019						
						826.20				
311 THE TERRAMAR GROUP, INC										

DOCUMENT	P.O.	INV DATE	VOUCHER	WARRANT	CHECK #	INVOICE NET	DUE DATE	TYPE	STS	INVOICE DESCRIPTION
94350		01/08/2019		0219-1	234278	33.73	01/16/2019	INV	PD	CONSOLE BLANK, TRAY #001
INVOICE:71782			CHECKDATE:02/01/2019							
8444 GALCO INDUSTRIAL ELECTRONICS, INC										
94407		01/03/2019		0219-1	234279	168.00	01/31/2019	INV	PD	ELECTRICAL PARTS
INVOICE:X04473001			CHECKDATE:02/01/2019							
348 GLEN ELLYN CHAMBER OF COMMERCE										
94107		01/22/2019		0119-4	234192	3,450.00	01/22/2019	INV	PD	2018 WELLNESS INCENTIVE CERTIF
INVOICE:12219			CHECKDATE:01/22/2019							
94249		01/24/2019		0119-4	234194	150.00	01/24/2019	INV	PD	WELLNESS GIFT CARDS-3 ADDITION
INVOICE:12419-1			CHECKDATE:01/24/2019							
						3,600.00				
355 GLEN ELLYN PUBLIC LIBRARY										
94116		01/22/2019		0119-4	234210	2,700.00	01/22/2019	INV	PD	2018 WELLNESS INCENTIVE CERTIF
INVOICE:12219			CHECKDATE:01/25/2019							
PPRT-107		12/31/2018		0119-5	21998	3,180.66	01/29/2019	DIR	PD	PPRT TO LIBRARY DEC 2018
INVOICE:PPRT-126			CHECKDATE:01/31/2019							
						5,880.66				
360 GLENBARD W. W. TREATMENT PLT.										
94397		01/31/2019		0119-5	22004	293,661.17	01/31/2019	DIR	PD	MONTHLY FLOW BILL
INVOICE:FY19-1			CHECKDATE:01/31/2019							
370 GRAYBAR ELECTRIC COMPANY INC										
94419		12/27/2018		0219-1	234280	16.96	01/31/2019	INV	PD	POST BASE
INVOICE:9307890993			CHECKDATE:02/01/2019							
10176 ADRIANNE GREGORY										
94217		01/17/2019		0119-4	234211	258.36	01/23/2019	INV	PD	EC SUPPLY REIMBURSEMENT
INVOICE:12319			CHECKDATE:01/25/2019							
380 HALL'S SAFETY EQUIPMENT CORP.										
94322		01/15/2019		0219-1	234281	27.95	01/28/2019	INV	PD	UNIFORMS
INVOICE:5356-1			CHECKDATE:02/01/2019							
2081 HAMPTON, LENZINI AND RENWICK, INC.										
94206		01/08/2019		0119-4	234212	1,835.00	01/23/2019	INV	PD	TREE PRESERVATION SERVICES
INVOICE:20190015			CHECKDATE:01/25/2019							
11485 PEGGY HAYLEY										
94321		01/21/2019		0219-1	234282	7.20	01/28/2019	INV	PD	CERTIFIED MAIL REIMBURSEMENT
INVOICE:er012819			CHECKDATE:02/01/2019							
9766 HEARTLAND										

DOCUMENT	P.O.	INV DATE	VOUCHER	WARRANT	CHECK #	INVOICE NET	DUE DATE	TYPE	STS	INVOICE DESCRIPTION
6387638		01/29/2019		0119-5	22002	2,111.11	01/29/2019	DIR	PD	CREDIT CARD FEES
INVOICE:HEARTLAND-39		CHECKDATE:01/31/2019								
6405 HIGHLAND BAKING CO										
94133		01/16/2019		0119-4	234213	54.70	01/22/2019	INV	PD	FOOD RESALE
INVOICE:1913582		CHECKDATE:01/25/2019								
94135		01/18/2019		0119-4	234213	67.34	01/22/2019	INV	PD	FOOD RESALE
INVOICE:1915426		CHECKDATE:01/25/2019								
94134		01/19/2019		0119-4	234213	42.04	01/22/2019	INV	PD	FOOD RESALE
INVOICE:1916077		CHECKDATE:01/25/2019								
94408		01/22/2019		0219-1	234283	38.87	01/31/2019	INV	PD	FOOD RESALE
INVOICE:1918239		CHECKDATE:02/01/2019								
						202.95				
5380 L & R MORAN, INC										
94117		12/31/2018		0119-4	234214	263.00	01/22/2019	INV	PD	BACKGROUND VERIFICATION
INVOICE:64505		CHECKDATE:01/25/2019								
8568 HOUSE OF GRAPHICS, INC										
94355		01/23/2019		0219-1	234284	284.25	01/23/2019	INV	PD	2019 EVENTS BOOKMARKS
INVOICE:1812080		CHECKDATE:02/01/2019								
7819 HOUSEAL LAVIGNE ASSOCIATES, LLC										
94205	20180043	01/07/2019		0219-1	234285	8,515.58	01/23/2019	INV	PD	COMPREHENSIVE PLAN UPDATE
INVOICE:4006		CHECKDATE:02/01/2019								
11483 MICHAEL IACONETTI										
94271		01/24/2019		0119-4	234215	1,418.00	01/24/2019	INV	PD	TRANSFER TAX REFUND
INVOICE:TXR012419		CHECKDATE:01/25/2019								
3773 IATAI										
94218		01/17/2019		0119-4	234216	45.00	01/23/2019	INV	PD	MEMBERSHIP BERGER
INVOICE:12319		CHECKDATE:01/25/2019								
414 ILLINOIS DEPT. OF REVENUE										
ST-1-144		01/29/2019		0119-5	21999	10,794.00	01/29/2019	DIR	PD	LINKS SALES TAX
INVOICE:ST-1-161		CHECKDATE:01/31/2019								
6370 ILLINOIS DIVISION IAI										
94356		11/29/2018		0219-1	234286	150.00	01/23/2019	INV	PD	DUES 1281,1280,1252,1370,1282,
INVOICE:12919		CHECKDATE:02/01/2019								
426 ILLINOIS STATE POLICE										
94207		12/31/2018		0119-4	234217	135.00	01/23/2019	INV	PD	ILL14530S, COST CTR 06156
INVOICE:233688		CHECKDATE:01/25/2019								

DOCUMENT	P.O.	INV DATE	VOUCHER	WARRANT	CHECK #	INVOICE NET	DUE DATE	TYPE	STS	INVOICE DESCRIPTION
10157 MICHAEL JAGODZINSKI										
94219		01/17/2019		0119-4	234218	280.00	01/23/2019	INV	PD	BOOTS REIMBURSEMENT
INVOICE:ER012319			CHECKDATE:01/25/2019							
1127 JAMES J BENES AND ASSOCIATES, INC.										
94208		12/31/2018		0119-4	234219	3,181.27	01/23/2019	INV	PD	PROFESSIONAL SERVICES
INVOICE:1115.073-4			CHECKDATE:01/25/2019							
9078 TYCO FIRE & SECURITY MANAGEMENT, INC										
94228		01/12/2019		0119-4	234220	138.00	01/12/2019	INV	PD	01300 133267672 65 S PARK QTRL
INVOICE:31846408			CHECKDATE:01/25/2019							
500 JULIE, INC.										
94136		01/09/2019		0219-1	234287	7,607.62	01/22/2019	INV	PD	ANNUAL JULIE SERVICES
INVOICE:2019-0651			CHECKDATE:02/01/2019							
9751 KLF ENTERPRISES										
94420	20180002	10/29/2018		0219-1	234288	292.50	01/31/2019	INV	PD	MATERIAL HAULING SERVICES
INVOICE:32426			CHECKDATE:02/01/2019							
94323	20180002	01/09/2019		0219-1	234288	1,681.35	01/28/2019	INV	PD	MATERIAL HAULING SERVICES
INVOICE:INV-000048			CHECKDATE:02/01/2019							
						1,973.85				
612 KONICA MINOLTA BUSINESS SOLUTIONS INC										
94379		01/20/2019		0219-1	234291	275.00	01/24/2019	INV	PD	COPIER C754E MAINT
INVOICE:32973706			CHECKDATE:02/01/2019							
94380		01/23/2019		0219-1	234290	445.00	01/24/2019	INV	PD	COPIER C458 MAINT, CONTRACT PM
INVOICE:376321626			CHECKDATE:02/01/2019							
94137		01/06/2019		0119-4	234221	421.20	01/22/2019	INV	PD	COPIER BHC224E INITIAL PAYMENT
INVOICE:62124077			CHECKDATE:01/25/2019							
94378		01/24/2019		0219-1	234289	496.53	01/24/2019	INV	PD	COPIER C754E MAINT
INVOICE:9005354032			CHECKDATE:02/01/2019							
						1,637.73				
7795 KATE KOPPENHOEFER										
94272		01/24/2019		0119-4	234222	100.00	01/24/2019	INV	PD	VEHICLE STICKER OVERPAYMENT
INVOICE:12419			CHECKDATE:01/25/2019							
2162 LANDSCAPE CREATIONS INC										
94357		01/29/2019		0219-1	234292	430.00	01/29/2019	INV	PD	RESTORATION DEPOSIT REFUND
INVOICE:20182198			CHECKDATE:02/01/2019							
11486 DALE ANDERSON										
94389		11/30/2018		0219-1	234293	1,900.00	01/29/2019	INV	PD	COURTSMART PUBLICATION
INVOICE:INV-0067			CHECKDATE:02/01/2019							

DOCUMENT	P.O.	INV DATE	VOUCHER	WARRANT	CHECK #	INVOICE NET	DUE DATE	TYPE	STS	INVOICE DESCRIPTION
4960 LAW ENFORCMENT RMS OF ILLINOIS										
94220		01/17/2019		0119-4	234223	25.00	01/23/2019	INV	PD	ANNUAL MEMBERSHIP TAVES
INVOICE:12319			CHECKDATE:01/25/2019							
644 NETTOYER, INC.										
94391		12/31/2018		0219-1	234294	300.30	01/29/2019	INV	PD	CAR WASHES DEC 2018
INVOICE:7481			CHECKDATE:02/01/2019							
11079 MATRIX PAYMENT SYSTEMS										
94396		01/29/2019		0119-5	22003	14.06	01/29/2019	DIR	PD	CC PROCESSOR VEHICLE STICKERS
INVOICE:MATRIX-8			CHECKDATE:01/31/2019							
584 MCCANN INDUSTRIES, INC.										
94324		01/14/2019		0219-1	234295	81.63	01/28/2019	INV	PD	SUPPLIES
INVOICE:1429697			CHECKDATE:02/01/2019							
11481 MEATHEAD MANAGEMENT LLC										
94162		01/23/2019		0119-4	234224	106.77	01/23/2019	INV	PD	WATER REFUND 410311
INVOICE:94162			CHECKDATE:01/25/2019							
11484 TOM/MARLA MELMS										
94275		01/23/2019		0119-4	234225	1,395.00	01/24/2019	INV	PD	TRANSFER TAX REFUND
INVOICE:TXR012419			CHECKDATE:01/25/2019							
595 MENARDS, INC.										
94138		01/11/2019		0119-4	234226	118.37	01/22/2019	INV	PD	STEEL CART, TOUGH BOX
INVOICE:6211			CHECKDATE:01/25/2019							
10966 MUNICIPAL CODE CORPORATION										
94273		01/15/2019		0119-4	234227	1,180.00	01/24/2019	INV	PD	ELECTRONIC SUPPLEMENT
INVOICE:323354			CHECKDATE:01/25/2019							
94274		01/17/2019		0119-4	234227	550.00	01/24/2019	INV	PD	ANNUAL ONLINE HOSTING
INVOICE:323394			CHECKDATE:01/25/2019							
						1,730.00				
5841 GENUINE PARTS CO-NAPA										
94392		12/31/2018		0219-1	234296	134.08	01/29/2019	INV	PD	BEARINGS #259
INVOICE:491744			CHECKDATE:02/01/2019							
94358		01/08/2019		0219-1	234296	4.18	01/29/2019	INV	PD	EMERY SHEET #259
INVOICE:492514			CHECKDATE:02/01/2019							
94361		01/14/2019		0219-1	234296	87.20	01/29/2019	INV	PD	AIR, FUEL, TRANS FILTERS
INVOICE:493127			CHECKDATE:02/01/2019							
94359		01/14/2019		0219-1	234296	7.15	01/29/2019	INV	PD	HYD FILTER
INVOICE:493128			CHECKDATE:02/01/2019							
94360		01/18/2019		0219-1	234296	8.17	01/29/2019	INV	PD	CABIN FILTER #203

DOCUMENT	P.O.	INV DATE	VOUCHER	WARRANT	CHECK #	INVOICE NET	DUE DATE	TYPE	STS	INVOICE DESCRIPTION
INVOICE:493769			CHECKDATE:02/01/2019							
						240.78				
635 NATIONAL ELEVATOR INSPECTION SVCS INC										
94223		01/14/2019		0119-4	234228	1,185.00	01/23/2019	INV	PD	INSPECTIONS JAN 2018
INVOICE:336941			CHECKDATE:01/25/2019							
94362		01/16/2019		0219-1	234297	65.00	01/29/2019	INV	PD	INSPECTION
INVOICE:337307			CHECKDATE:02/01/2019							
						1,250.00				
643 NEENAH FOUNDRY COMPANY										
94325		01/15/2019		0219-1	234298	1,044.00	01/28/2019	INV	PD	FRAMES, LIDS
INVOICE:306507			CHECKDATE:02/01/2019							
10278 NELS J JOHNSON TREE EXPERTS, INC										
94139	20190009	01/15/2019		0119-4	234229	2,162.00	01/22/2019	INV	PD	TREE PRUNING SERVICES
INVOICE:125102			CHECKDATE:01/25/2019							
9719 NETWORKFLEET, INC										
94390		01/01/2019		0219-1	234299	1,248.75	01/29/2019	INV	PD	GPS, FLEET TRACKING DEC 2018
INVOICE:OSV1651072			CHECKDATE:02/01/2019							
7183 NEWEGG INC										
94384		01/14/2019		0219-1	234300	60.03	01/24/2019	INV	PD	LONG POWER CORDS FOR MONITORS
INVOICE:1301812571			CHECKDATE:02/01/2019							
94385		01/14/2019		0219-1	234300	232.77	01/24/2019	INV	PD	LONG VIDEO CABLES FOR MONITORS
INVOICE:1301812749			CHECKDATE:02/01/2019							
94382		01/16/2019		0219-1	234300	80.32	01/24/2019	INV	PD	HARD DRIVE ADAPTER BRACKETS
INVOICE:1301817897			CHECKDATE:02/01/2019							
94383		01/16/2019		0219-1	234300	33.69	01/24/2019	INV	PD	FLASHLIGHTS
INVOICE:1301819108			CHECKDATE:02/01/2019							
94381		01/17/2019		0219-1	234300	23.66	01/24/2019	INV	PD	RECHARGEABLE BATTERIES
INVOICE:1301822122			CHECKDATE:02/01/2019							
						430.47				
651 NORTHERN ILLINOIS GAS COMPANY										
94119		01/09/2019		0119-4	234230	3,194.78	01/22/2019	INV	PD	01-66-52-1000 9 0119
INVOICE:94119			CHECKDATE:01/25/2019							
94221		01/16/2019		0119-4	234230	160.09	01/23/2019	INV	PD	28-61-60-1000 6 0119
INVOICE:94221			CHECKDATE:01/25/2019							
94222		01/16/2019		0119-4	234230	273.32	01/23/2019	INV	PD	14-78-54-4533 0 0119
INVOICE:94222			CHECKDATE:01/25/2019							
94310		01/09/2019		0219-1	234301	277.57	01/28/2019	INV	PD	33-46-52-1000 4 0119
INVOICE:94310			CHECKDATE:02/01/2019							
94311		01/09/2019		0219-1	234301	103.42	01/28/2019	INV	PD	65-16-52-1000 9 0119
INVOICE:94311			CHECKDATE:02/01/2019							
						4,009.18				
738 RAY O'HERRON CO. INC.										

DOCUMENT	P.O.	INV DATE	VOUCHER	WARRANT	CHECK #	INVOICE NET	DUE DATE	TYPE	STS	INVOICE DESCRIPTION
94209		12/26/2018		0119-4	234231	140.00	01/23/2019	INV	PD	UNIFORMS
INVOICE:1868692-IN			CHECKDATE:01/25/2019							
94210		12/27/2018		0119-4	234231	264.00	01/23/2019	INV	PD	UNIFORMS
INVOICE:1868927-IN			CHECKDATE:01/25/2019							
94211		12/27/2018		0119-4	234231	156.83	01/23/2019	INV	PD	UNIFORMS
INVOICE:1868929-IN			CHECKDATE:01/25/2019							
94227		01/08/2019		0119-4	234231	140.00	01/08/2019	INV	PD	UNIFORMS
INVOICE:1901166-IN			CHECKDATE:01/25/2019							
						700.83				
1458 OFFICE DEPOT, INC										
94226		01/02/2019		0119-4	234232	-69.44	01/02/2019	CRM	PD	CREDIT OFFICE SUPPLIES
INVOICE:253602330001			CHECKDATE:01/25/2019							
94225		01/07/2019		0119-4	234232	176.20	01/23/2019	INV	PD	OFFICE SUPPLIES
INVOICE:255613346001			CHECKDATE:01/25/2019							
94141		01/08/2019		0119-4	234232	35.98	01/22/2019	INV	PD	OFFICE SUPPLIES
INVOICE:255746921001			CHECKDATE:01/25/2019							
94140		01/08/2019		0119-4	234232	22.62	01/22/2019	INV	PD	OFFICE SUPPLIES
INVOICE:256003080001			CHECKDATE:01/25/2019							
94326		01/14/2019		0219-1	234302	41.07	01/28/2019	INV	PD	OFFICE SUPPLIES
INVOICE:258732816001			CHECKDATE:02/01/2019							
94327		01/16/2019		0219-1	234302	17.99	01/28/2019	INV	PD	OFFICE SUPPLIES
INVOICE:258733183001			CHECKDATE:02/01/2019							
94328		01/15/2019		0219-1	234302	40.74	01/28/2019	INV	PD	SUPPLIES
INVOICE:259269654001			CHECKDATE:02/01/2019							
94329		01/17/2019		0219-1	234302	38.88	01/28/2019	INV	PD	OFFICE SUPPLIES
INVOICE:261306673001			CHECKDATE:02/01/2019							
						304.04				
676 PACKEY WEBB FORD, INC.										
94365		01/18/2019		0219-1	234303	95.76	01/29/2019	INV	PD	DRIVELINE BEARING
INVOICE:145121			CHECKDATE:02/01/2019							
94364		01/21/2019		0219-1	234303	334.06	01/29/2019	INV	PD	LINK ASSY #18-238
INVOICE:145152			CHECKDATE:02/01/2019							
						429.82				
6453 PARAMEDIC BILLING SERVICES, INC.										
94430		01/31/2019		0119-5	22010	-9.50	01/31/2019	CRM	PD	AMBULANCE BILLING FEES DEC 201
INVOICE:PBS-98			CHECKDATE:01/31/2019							
7749 PAYMENT SERVICE NETWORK, INC										
6592134		01/29/2019		0119-5	22000	482.45	01/29/2019	DIR	PD	CUST ONLINE BANKING FEE
INVOICE:PSN-4			CHECKDATE:01/31/2019							
10823 PEST MANAGEMENT SERVICES, INC										
94363		01/21/2019		0219-1	234304	349.00	01/29/2019	INV	PD	PEST CONTROL
INVOICE:19902			CHECKDATE:02/01/2019							
11266 PHYSICIANS IMMEDIATE CARE NORTH CHICAGO LLC										

DOCUMENT	P.O.	INV DATE	VOUCHER	WARRANT	CHECK #	INVOICE NET	DUE DATE	TYPE	STS	INVOICE DESCRIPTION
94113		01/16/2019		0119-4	234233	1,593.00	01/22/2019	INV	PD	SCREENINGS DEC 2018
INVOICE:4083804		CHECKDATE:01/25/2019								
6994 PITNEY BOWES, INC										
94312		01/10/2019		0219-1	234305	496.23	01/28/2019	INV	PD	QTRLY POSTAGE METER PW
INVOICE:3102849738		CHECKDATE:02/01/2019								
11348 RANDALL INDUSTRIES INC										
94366		01/14/2019		0219-1	234306	67.56	01/29/2019	INV	PD	MANUAL GEM-1400 #634, 640
INVOICE:181428		CHECKDATE:02/01/2019								
746 RELIABLE HIGH PERFORMANCE PRODUCTS, INC										
94330		01/16/2019		0219-1	234307	157.85	01/28/2019	INV	PD	RAIN GEAR
INVOICE:201823		CHECKDATE:02/01/2019								
756 RJN GROUP, INC.										
94313	20170052	11/20/2018		0219-1	234308	130,550.82	01/28/2019	INV	PD	CBD UNDERGRD INFRASTRUCT STUDY
INVOICE:315407		CHECKDATE:02/01/2019								
8894 RUSSO HARDWARE, INC										
94142		01/07/2019		0119-4	234234	214.95	01/22/2019	INV	PD	SHOVELS
INVOICE:5590081		CHECKDATE:01/25/2019								
94143		01/15/2019		0119-4	234234	1,628.92	01/22/2019	INV	PD	SAW, CART, SUPPLIES
INVOICE:5601900		CHECKDATE:01/25/2019								
						1,843.87				
6093 SCHAMBERGER BROTHERS, INC										
94145		01/11/2019		0119-4	234235	501.00	01/22/2019	INV	PD	BEVERAGE RESALE
INVOICE:420159		CHECKDATE:01/25/2019								
94146		01/18/2019		0119-4	234235	67.00	01/22/2019	INV	PD	BEVERAGE RESALE
INVOICE:420304		CHECKDATE:01/25/2019								
						568.00				
9718 SEBIS DIRECT INC										
94276		01/15/2019		0119-4	234236	871.72	01/24/2019	INV	PD	WATER BILLS JAN 2018
INVOICE:26990		CHECKDATE:01/25/2019								
2405 SIGN IDENTITY, INC										
94114		11/21/2018		0119-4	234237	270.00	01/22/2019	INV	PD	SIGNAGE
INVOICE:1811049		CHECKDATE:01/25/2019								
6942 SMITH BROTHERS TREE SERVICE										
94144		01/17/2019		0119-4	234238	975.00	01/22/2019	INV	PD	SNOW REMOVAL CIVIC CENTER
INVOICE:193		CHECKDATE:01/25/2019								

DOCUMENT	P.O.	INV DATE	VOUCHER	WARRANT	CHECK #	INVOICE NET	DUE DATE	TYPE	STS	INVOICE DESCRIPTION
8694 SNI SOLUTIONS, INC										
94331		01/17/2019		0219-1	234309	4,035.00	01/28/2019	INV	PD	GEOBLEND
INVOICE:138881			CHECKDATE:02/01/2019							
10181 SOUTHERN GLAZER'S WINE AND SPIRITS, LLC										
94149		01/17/2019		0119-4	234239	291.00	01/22/2019	INV	PD	BEVERAGE RESALE
INVOICE:2490884			CHECKDATE:01/25/2019							
803 SPARTAN MOTORS CHASSIS, INC										
94410		01/22/2019		0219-1	234310	-112.43	01/22/2019	CRM	PD	CREDIT PART
INVOICE:CM00046724			CHECKDATE:02/01/2019							
94409		01/08/2019		0219-1	234310	112.43	01/31/2019	INV	PD	U-JOINTS #1E60
INVOICE:IN00760963			CHECKDATE:02/01/2019							
94367		01/10/2019		0219-1	234310	545.51	01/29/2019	INV	PD	STEERING SHAFT ASSY #1E60
INVOICE:IN00761418			CHECKDATE:02/01/2019							
						545.51				
806 STANDARD EQUIPMENT COMPANY										
94393		12/26/2018		0219-1	234311	360.75	01/29/2019	INV	PD	GUTTER BROOM
INVOICE:P11369			CHECKDATE:02/01/2019							
94371		01/02/2019		0219-1	234311	70.75	01/17/2019	INV	PD	SEALS & GASKETS #249
INVOICE:P11479			CHECKDATE:02/01/2019							
94370		01/02/2019		0219-1	234311	34.96	01/17/2019	INV	PD	SEALS #259
INVOICE:P11480			CHECKDATE:02/01/2019							
94368		01/14/2019		0219-1	234311	1,570.63	01/29/2019	INV	PD	SWEEPER REPLACE PARTS #249
INVOICE:P11678			CHECKDATE:02/01/2019							
94411		01/17/2019		0219-1	234311	139.62	01/22/2019	INV	PD	PARTS #259
INVOICE:P11746			CHECKDATE:02/01/2019							
94369		01/17/2019		0219-1	234311	-476.02	01/17/2019	CRM	PD	CREDIT HYD MOTOR #249
INVOICE:P11757			CHECKDATE:02/01/2019							
						1,700.69				
2687 STAPLES CONTRACT & COMMERCIAL, INC.										
94332		01/12/2019		0219-1	234312	70.56	01/28/2019	INV	PD	OFFICE SUPPLIES
INVOICE:3401869455			CHECKDATE:02/01/2019							
7787 STENSTROM PETROLEUM SERVICES GROUP										
94372		01/17/2019		0219-1	234313	295.95	01/17/2019	INV	PD	BREAKAWAY HOSE REPAIR FUEL ISL
INVOICE:S137576			CHECKDATE:02/01/2019							
7600 STUEVER & SONS, INC										
94150		01/16/2019		0119-4	234240	142.00	01/22/2019	INV	PD	BEER LINE CLEAINING
INVOICE:260499			CHECKDATE:01/25/2019							
827 SUBURBAN DRIVE LINE, INC.										
94373		01/10/2019		0219-1	234314	70.00	01/17/2019	INV	PD	STEERING SHAFT U-JOINTS #1E60
INVOICE:150418			CHECKDATE:02/01/2019							

DOCUMENT	P.O.	INV DATE	VOUCHER	WARRANT	CHECK #	INVOICE NET	DUE DATE	TYPE	STS	INVOICE DESCRIPTION
11226 SUN DATA SUPPLY, INC										
94386		01/22/2019		0219-1	234315	52.90	01/24/2019	INV	PD	TONER
INVOICE:INV0111384			CHECKDATE:02/01/2019							
835 SUPERIOR BEVERAGE CO.										
94148		01/11/2019		0119-4	234241	286.90	01/22/2019	INV	PD	BEVERAGE RESALE
INVOICE:682240			CHECKDATE:01/25/2019							
94147		01/18/2019		0119-4	234241	522.00	01/22/2019	INV	PD	BEVERAGE RESALE
INVOICE:682300			CHECKDATE:01/25/2019							
						808.90				
853 TERMINAL SUPPLY CO, INC										
94374		01/15/2019		0219-1	234316	282.76	01/17/2019	INV	PD	RELAYS, NYLON RINGS, CONNECTOR
INVOICE:90203-00			CHECKDATE:02/01/2019							
2211 JANET TERRANOVA										
94277		01/22/2019		0119-4	234242	40.00	01/24/2019	INV	PD	TRAVEL REIMBURSEMENT
INVOICE:ER012419			CHECKDATE:01/25/2019							
10558 TESTA PRODUCE, INC										
94153		01/16/2019		0119-4	234243	183.70	01/22/2019	INV	PD	FOOD RESALE
INVOICE:4616066			CHECKDATE:01/25/2019							
94152		01/18/2019		0119-4	234243	226.80	01/22/2019	INV	PD	FOOD RESALE
INVOICE:4620036			CHECKDATE:01/25/2019							
94151		01/19/2019		0119-4	234243	151.75	01/22/2019	INV	PD	FOOD RESALE
INVOICE:4620949			CHECKDATE:01/25/2019							
94413		01/22/2019		0219-1	234317	187.60	01/22/2019	INV	PD	FOOD RESALE
INVOICE:4621409			CHECKDATE:02/01/2019							
						749.85				
10360 TIMOTHY A ARMSTRONG										
94421		01/24/2019		0219-1	234318	847.00	01/31/2019	INV	PD	ADJUDICATION SERVCIES
INVOICE:13119			CHECKDATE:02/01/2019							
3580 TRUGREEN LIMITED PARTNERSHIP										
94314		12/05/2018		0219-1	234319	826.00	01/28/2019	INV	PD	ICE MELT
INVOICE:95923815			CHECKDATE:02/01/2019							
9216 ULINE, INC										
94115		11/19/2018		0119-4	234244	122.90	01/22/2019	INV	PD	CONTRACTOR BAGS
INVOICE:103312922			CHECKDATE:01/25/2019							
898 UNITED STATES POSTMASTER										
94122		01/22/2019		0119-4	234193	1,208.15	01/22/2019	INV	PD	LINKS PRE-SEASON NEWSLETTER
INVOICE:12219			CHECKDATE:01/22/2019							

DOCUMENT	P.O.	INV DATE	VOUCHER	WARRANT	CHECK #	INVOICE NET	DUE DATE	TYPE	STS	INVOICE DESCRIPTION
886 U.S. VENTURE, INC										
94375		01/16/2019		0219-1	234320	183.61	01/17/2019	INV	PD	EXHAUST SYSTEM PARTS #216
INVOICE:3582686			CHECKDATE:02/01/2019							
884 U.S. FOODSERVICE, INC.										
94415		01/22/2019		0219-1	234321	42.83	01/29/2019	INV	PD	SUPPLIES
INVOICE:1000778			CHECKDATE:02/01/2019							
94414		01/29/2019		0219-1	234321	1,826.94	01/29/2019	INV	PD	FOOD RESALE
INVOICE:1209661			CHECKDATE:02/01/2019							
94427		11/07/2018		0219-1	234321	46.81	01/31/2019	INV	PD	FOOD RESALE
INVOICE:1594780			CHECKDATE:02/01/2019							
94426		11/19/2018		0219-1	234321	172.77	01/31/2019	INV	PD	FOOD RESALE
INVOICE:1987435			CHECKDATE:02/01/2019							
94425		11/20/2018		0219-1	234321	20.18	01/31/2019	INV	PD	SUPPLIES
INVOICE:2039379			CHECKDATE:02/01/2019							
94424		11/29/2018		0219-1	234321	438.56	01/31/2019	INV	PD	FOOD, SUPPLIES
INVOICE:2306986			CHECKDATE:02/01/2019							
94423		12/13/2018		0219-1	234321	104.97	01/31/2019	INV	PD	GLASSWARE
INVOICE:2784283			CHECKDATE:02/01/2019							
94155		01/18/2019		0119-4	234245	-5.00	01/22/2019	CRM	PD	CREDIT CONTAINERS
INVOICE:2999070			CHECKDATE:01/25/2019							
94157		01/11/2019		0119-4	234245	26.24	01/22/2019	INV	PD	FOOD RESALE
INVOICE:684428			CHECKDATE:01/25/2019							
94156		01/11/2019		0119-4	234245	163.77	01/22/2019	INV	PD	SPOONS
INVOICE:687035			CHECKDATE:01/25/2019							
94158		01/15/2019		0119-4	234245	45.87	01/22/2019	INV	PD	GRATER
INVOICE:780237			CHECKDATE:01/25/2019							
94154		01/18/2019		0119-4	234245	2,224.82	01/22/2019	INV	PD	FOOD RESALE
INVOICE:905700			CHECKDATE:01/25/2019							
94416		01/22/2019		0219-1	234321	1,047.08	01/29/2019	INV	PD	FOOD RESALE
INVOICE:983737			CHECKDATE:02/01/2019							
						6,155.84				
1190 HD SUPPLY FACILITIES MAINT LTD.										
94422		12/13/2018		0219-1	234322	37.54	01/31/2019	INV	PD	TESTING SUPPLIES
INVOICE:762057			CHECKDATE:02/01/2019							
94333		01/17/2019		0219-1	234322	130.08	01/28/2019	INV	PD	HYDRANT FLAGS
INVOICE:788967			CHECKDATE:02/01/2019							
						167.62				
915 VERIZON WIRELESS SERVICES LLC										
94334		01/15/2019		0219-1	234323	1,110.43	01/28/2019	INV	PD	486486569-00001 0119
INVOICE:9822307399			CHECKDATE:02/01/2019							
94387		01/16/2019		0219-1	234324	700.24	01/24/2019	INV	PD	580459997-00001 0119
INVOICE:9822391725			CHECKDATE:02/01/2019							
						1,810.67				
1876 VIPOE, INC										
94159		01/16/2019		0119-4	234246	1,525.00	01/22/2019	INV	PD	FURNITURE RENTAL 1/15-2/15/19

DOCUMENT	P.O.	INV DATE	VOUCHER	WARRANT	CHECK #	INVOICE NET	DUE DATE	TYPE	STS	INVOICE DESCRIPTION
INVOICE:65044			CHECKDATE:01/25/2019							
94229		01/17/2019		0119-4	234246	239.99	01/17/2019	INV	PD	DESK CHAIR
INVOICE:65072			CHECKDATE:01/25/2019							
						1,764.99				
11451 VIP SERVICES INC										
94270		12/29/2018		0119-4	234247	600.00	01/24/2019	INV	PD	VALET SERVICE 12/28-29/18
INVOICE:25480			CHECKDATE:01/25/2019							
94231		01/05/2019		0119-4	234247	480.00	01/23/2019	INV	PD	VALET PARKING 1/4-5/19
INVOICE:25501			CHECKDATE:01/25/2019							
94232		01/12/2019		0119-4	234247	480.00	01/23/2019	INV	PD	VALET PARKING 1/11-12/19
INVOICE:25537			CHECKDATE:01/25/2019							
94233		01/19/2019		0119-4	234247	480.00	01/23/2019	INV	PD	VALET PARKING 1/18-19/19
INVOICE:25556			CHECKDATE:01/25/2019							
						2,040.00				
935 WATER RESOURCES INC.										
94316	20180050	11/27/2018		0219-1	234325	42,500.00	01/28/2019	INV	PD	7000 RADIO READ ENDPOINTS
INVOICE:32767			CHECKDATE:02/01/2019							
94315	20180050	12/17/2018		0219-1	234325	42,500.00	01/28/2019	INV	PD	7000 RADIO READ ENDPOINTS
INVOICE:32793			CHECKDATE:02/01/2019							
94160		01/08/2019		0119-4	234248	3,225.00	01/22/2019	INV	PD	WATER METER
INVOICE:32840			CHECKDATE:01/25/2019							
						88,225.00				
962 WILSON GOLF DIVISION										
94161		01/10/2019		0119-4	234249	188.46	01/22/2019	INV	PD	PRODUCT RESALE
INVOICE:4526975095			CHECKDATE:01/25/2019							
7711 WINDY CITY DISTRIBUTION COMPANY										
94120		09/20/2018		0119-4	234250	15.00	01/22/2019	INV	PD	GLASSWARE
INVOICE:193500			CHECKDATE:01/25/2019							
8565 WIDEOPENWEST FINANCE LLC										
94388		01/15/2019		0219-1	234326	127.50	01/24/2019	INV	PD	013896527 0119
INVOICE:94388			CHECKDATE:02/01/2019							
						127.50				
361 INVOICES						798,720.43				

** END OF REPORT - Generated by Lori Thomas **

Minutes
Village of Glen Ellyn
Regular Workshop Meeting
Tuesday, January 22, 2019
7:00 PM
Glen Ellyn Civic Center, Galligan Board Room

A. Call to Order

Attendee Name	Title	Status	Arrived
Diane McGinley	Village President	Present	
Bill Enright	Village Trustee	Present	
Gary Fasules	Village Trustee	Present	
John Kenwood	Village Trustee	Present	
Pete Ladesic	Village Trustee	Present	
Craig R. Pryde	Village Trustee	Present	
Mark Senak	Village Trustee	Present	
John Chereskin	Village Clerk	Present	
Mark Franz	Village Manager	Present	
Greg Mathews	Village Attorney	Present	
William Holmer	Assistant Village Manager	Present	
Christina Coyle	Finance Director	Present	
Staci Springer	Director	Present	
Phil Norton	Chief of Police	Present	
Kelly Purvis		Present	
John Sterrett	Village Planner	Present	
Rich Daubert	Senior Civil Engineer	Present	
Meredith Hannah	Economic Development Coordinator	Present	

B. Pledge of Allegiance

President McGinley led the Pledge of Allegiance.

C. Roll Call

D. Audience Participation

None

E. Apex 400 Development (Planning and Development Director Springer) (Discussion Only)

1. Planning and Development Director Springer will lead a discussion regarding the Apex 400 mixed use development, the Plan Commission public hearing on the proposal, recommended conditions of approval, financial incentives and the Redevelopment Agreement.

Planning and Development Director Springer presented background on the proposed Apex 400 mixed use development. Planning and Development Director Springer stated GSP Development is proposing a 5-story mixed use development at the northwest corner of Main Street and Hillside Avenue on the former Giesche shoe site and the Village owned parking lot at 418-424 N. Main Street. Planning and Development Director Springer stated GSP Development appeared before the Plan Commission in May 2018 for a pre-application meeting, and the Plan Commission provided positive feedback regarding the proposal but suggested that the residential amenities proposed on the first floor be relocated to make additional space for first floor commercial uses along Main Street. Planning and Development Director Springer stated the developers did then increase the first floor commercial square footage to 8,844 square feet.

Planning and Development Director Springer stated the developers submitted their formal application for review on July 20, 2018, and staff did ask for supplemental information with this application, including a sun study, a market study justifying the unit mix for the development, height exhibits showing the height of the proposed building compared to other downtown Glen Ellyn buildings and photos of other buildings of a similar scale in other suburban communities and a survey of other suburban downtown transit-oriented-development parking ratios to justify the requested residential parking ratio.

Planning and Development Director Springer stated the staff requested many changes to the project including alterations to the parking garage, additional architectural detailing on the building and site modifications creating a more pedestrian friendly environment and safer traffic flow. Planning and Development Director Springer stated the comprehensive list of the 28 items are included in the Trustees' packets and reviewed a few of the items. Planning and Development Director Springer showed a rendering of the original proposed building elevation which had a lots of metal on it and was very contemporary looking. Planning and Development Director Springer showed a picture of the proposed building now.

Planning and Development Director Springer stated the Plan Commission held a public hearing on January 7, 2019, and 36 members of the public spoke with mixed support for the project. Planning and Development Director Springer stated the members of the public who supported the project stated the downtown

needs revitalization, and there is a lot of options for this type of housing in Glen Ellyn. Planning and Development Director Springer stated those who were against the project had issues with the proposed height of the structure and that the character of the structure does not match other structures in the downtown.

Planning and Development Director Springer stated the Plan Commission did vote to recommend approval by a voice vote of 9 "yes" and 0 "no." Planning and Development Director Springer stated staff suggested and the Plan Commission recommended a number of conditions be placed upon the project if approved, including

1. *That should the developer be able to acquire three feet of the alley located north of Lot 5, that Planned Unit Development (PUD) Alternate Plan B shall be substituted for the approved Plan A.*
2. *That the developer install a sign at the access points from the development onto Hillside Avenue indicating "No Right Turn Monday through Thursday from 7:45 to 8:30 a.m. or Friday from 8:30 to 9:15 a.m." The location and exact wording of the signage will be subject to the approval of Village Staff.*
3. *That the developer install a sign at the access point from the development onto Glenwood Avenue indicating "No Left Turn Monday through Thursday from 7:45 to 8:30 a.m. and Friday from 8:30 to 9:15 a.m." The location and exact wording of the signage will be subject to the approval of Village Staff.*
4. *That the developer convert the traffic flow on Hillside Avenue between Main Street and Glenwood Avenue to two-way traffic including any necessary signage, pavement markings and geometric changes to the roadway as directed by the Village Engineer.*
5. *That the Village will pursue the installation of a stop sign for westbound traffic at the Hillside Avenue/Glenwood Avenue intersection, subject to conformance with engineering standards, manuals and traffic warrants as determined by the Village Engineer and Police Chief.*
6. *The final streetscape and public improvements for the project will match the streetscape design to be selected by the Village Board in 2019.*
7. *Prior to returning for final approval of the Planned Unit Development, the landscape plan shall be revised to show street trees with a minimum diameter of 4 - 6 inches.*
8. *Prior to returning for review of the Final Planned Unit Development, the site plan shall be revised to show the bike rack moved from Hillside Avenue to a more appropriate location that will not interfere with site ingress/egress.*
9. *Prior to returning for approval of the Final Planned Unit Development, the second floor plan shall be revised to show all parking stalls numbered and assigned by unit.*
10. *Prior to issuance of a building permit, the petitioners shall pay the Village $169,219.00 to be dispersed to the Glen Ellyn Park District, School District 41, School District 87, Fire Company and the Glen Ellyn Library.*

Planning and Development Director Springer reviewed the TIF Incentive Request and stated the Tax Increment Financing (TIF) was adopted in 2012 for the downtown. Planning and Development Director Springer stated the development investment is estimated at $39 million, and the development is expected to

generate $7.8 million through 2035 when the TIF is set to expire. Planning and Development Director Springer stated the developer is seeking $800,000 total over five years in TIF incentives.

Planning and Development Director Springer stated the Village and the Developer have been negotiating a Redevelopment Agreement over the past few months, and this agreement outlines the responsibilities of the developer and provides protections for the Village. Planning and Development Director Springer stated reviewed the critical business terms of this redevelopment agreement. Planning and Development Director Springer stated if the project is approved, parking for public use at this development would be available by December 31st, 2019.

Planning and Development Director Springer review the next steps for this proposed project and stated the Preliminary Planned Unit Development Plan is scheduled for Village Board consideration at the January 28th Village Board meeting. Planning and Development Director Springer stated if approved, the developer would then need to submit Final PUD Plans for the Plan Commission and Village Board consideration. Planning and Development Director Springer stated the developer would be permitted to submit building permit plans concurrent with their Final PUD approval request.

Larry Debb, Developer with GSP Development, stated they look at three things when considering a possible project including if there is a market for what they think they want to build, if there is land available and if this is something a community wants. Mr. Debb stated this development has four pieces, including the public parking, parking for the tenants of the development, over 8,800 square feet of retail space and 107 high-end luxury apartments. Mr. Debb stated they have been working on this proposed project for over a year.

Mr. Debb stated there will be 137 parking spaces available for the public when this is completed, and the parking will have new concrete, new drainage, new lighting and three means of ingress/egress.

Mr. Debb stated when the development is completed, it will produce over $400,000 to the taxing bodies as well as they will be donating $188,000 to the library, school and Fire Department. Mr. Debb stated the Village will also receive $500,000 for fees and permits.

Mr. Debb stated for the retail space, they do have several restaurants interested. Mr. Debb stated there will be secured parking for the tenants coming off of Hillside Avenue. Mr. Debb stated the units will be high-end with approximately 27% of the units being two bedrooms, approximately 60% being one-bedroom units and the remaining would be studio units. Mr. Debb stated they designed this in such a way that some of the one-bedroom units can be combined into three-bedroom units. Mr. Debb stated there is usually one child for every 30 units, and he feels this development will have a limited impact on the schools in Glen Ellyn.

Mr. Debb stated they did work with the Village staff, the local business, churches

and other residents to get feedback on the look of the building. Mr. Debb stated they will be using quality materials with solid full bricks including a darker red, which will closely match the brick on St. Petronille's. Mr. Debb stated there will be limestone along the cornice and at the top and bottom of the windows.

Mr. Debb thanked St. Petronille's and the Diocese of Joliet for their feedback on this project. Mr. Debb stated there are safety concerns about the children getting to and from St. Petronille's School, and none of the resident traffic on Hillside Avenue will go toward the school. Mr. Debb stated during construction, all construction of the pre-cast will stop during drop-off and pick-up times at St. Petronille's, and the crane will be on the development property. Mr. Debb stated the children's safety is paramount.

Mr. Debb stated the majority of the downtown businesses signed a petition in favor of this project. Mr. Debb stated he understands concerns about the proposed height of the building, but the proposed building will not block any residents' views. Mr. Debb stated there will be limited shadowing from the sun. Mr. Debb stated there are 7-story buildings next to single-family homes.

Mr. Debb stated the public parking will only be down 4 to 6 months, and they have arranged with the Diocese of Joliet for their team to park on St. Petronille's property during construction.

Bob Rychlicki, President of Kane, McKenna and Associates, Inc. in Chicago, Illinois, stated their firm was tasked with reviewing the proposal, including the incentive request, the overall financial feasibility of the project and the TIF request. Mr. Rychlicki stated nothing in the proforma raises eyebrows, and the proforma seems reasonable. Mr. Rychlicki stated the cost and discounted returns are due to the project itself. Mr. Rychlicki stated the TIF projections are value-added for the Village, and there will be more net return to the Village if there are more students. Mr. Rychlicki stated there are projecting a modest growth of 2% per year.

Trustee Senak asked about the estimate on the revenue. Mr. Rychlicki stated the 2% per year is based on valuation. Trustee Senak asked about the estimate on the value of the land being contributed. Village Manager Franz stated this is based on an appraisal the Village did on this property five years ago.

Trustee Enright asked how much of the tax revenue coming in would go toward the schools. Mr. Rychlicki stated approximately 65%.

Trustee Kenwood asked about the vetting of construction costs. Mr. Rychlicki stated they used two sources for this. Trustee Kenwood asked if the internal construction was looked at as well as external construction to which Mr. Rychlicki stated it was.

Trustee Ladesic stated Mr. Debb said the initial donation to the taxing bodies would be $188,000, but the amount in the Trustees' packet was $169,000. Planning and Development Director Springer stated $169,000 is the actual

number which was recommended by the Village Staff and the Plan Commission.

Trustee Enright thanked the Village staff for their work on this. Trustee Enright stated the proposed cornice on the building was suggested by staff and asked how tall the building would be with no cornice.
Planning and Development Director Springer stated one of the Historic Preservation Commissioners asked for the cornice so the staff asked for this to be added. Planning and Development Director Springer stated there is a cornice as well on the building at the intersection of Main Street and Crescent Boulevard. Planning and Development Director Springer stated if there is a minimal cornice, the height of the building would be 58 ½ feet. Planning and Development Director Springer stated the majority of the building along Main Street would be 58 feet high. Mike Breclaw, Architect with Fitzgerald Architects in Chicago, Illinois, stated both front corners of the building have cornices that are accentuated higher. Planning and Development Director Springer stated the popped-up corners are 65 feet in height. Mr. Debb showed an updated rendering of the building and stated they did add brick to the southern elevation.

Trustee Enright asked about the height of the tallest building across the street. Mr. Debb showed the picture in the Trustees' packet and stated the tallest building is 42 feet high. Mr. Debb stated they looked at doing a level underground, but the cost was exorbitant.

Trustee Senak stated he is not in favor of five stories, and he feels they do not need public parking in this development. Trustee Senak asked if they could go to four levels if the public parking was removed from this development. Mr. Debb stated this is a possibility and could be feasible, but the per unit cost goes up. Mr. Debb stated their financing did expire last month, but they have an extension on this.

Trustee Fasules stated if they eliminated the public parking and went down to four stories, the proposed pool could be moved of the front of the building so they could lose some bulk in the front of the building. Trustee Pryde stated they would lose the sun if the pool moved to the front of the building.

Trustee Senak asked what it would take to redesign the building to four stories. Trustee Kenwood asked if a proforma was done on a 4-story building. Mr. Debb stated there is an approximate $3 million delta as the unit cost goes up significantly. Mr. Debb stated the managers and maintenance costs are still fixed. Trustee Kenwood stated there would be a savings on materials with no fifth story. Mr. Debb stated if they take the building to four stories, they would need additional help from the Village. Mr. Rychlicki stated they have not looked at a proforma for a 4-story building.

Trustee Enright asked how many units would be lost if they went to four stories. Mr. Debb stated they would lose 11 units, and the rents are at the top now.

President McGinley stated there is a financial impact to the Village as the cost for the Civic Center parking garage goes up as parking spots are being moved from

the Apex 400 development to the proposed Civic Center garage. President McGinley stated the Civic Center parking garage would then need to be a basement and five stories above ground. President McGinley stated if the spaces are moved, the net total of new spaces would be 82.

Trustee Kenwood asked if the $500,000 going to the Village is a net cost. Planning and Development Director Springer stated this is all the building permit fees which the Village will collect and keep. Planning and Development Director Springer stated there will be a deposit above and beyond this $500,000.

Trustee Kenwood asked about the quality of the materials. Mr. Debb stated the Village staff was impressed with the sample materials. Trustee Kenwood asked how the Village is ensuring that high-end pieces are going in the interior of the building. Village Manager Franz stated there is an open-book piece in the Redevelopment Agreement where the developer needs to show its costs to the Village.

Trustee Kenwood stated this will be a gateway building to the Village and asked if the corner of the building could be softened. Mr. Debb stated the 1st-floor retail is already small, and if they did soften the corner, they would lose square footage in the units as well. Trustee Kenwood stated the cornice adds to the architecture of the building. Trustee Ladesic asked if Trustee Kenwood supported bumping up the corner to break up the corner. Trustee Kenwood stated the architecture fits better, and this could work.

Trustee Kenwood asked if the parking deck would be ready in six months. Mr. Debb stated the public parking deck would be ready in six months or less. Village Manager Franz stated this is in the Redevelopment Agreement.

Trustee Fasules asked if the developer knew the height restriction in the Zoning Code. Mr. Debb stated they knew this, and the Glen Ellyn Comprehensive Plan calls for mixed use developments. Mr. Debb stated they knew the number of units that would make this development financially capable. Village Manager Franz stated the parking drives the height of this building. Trustee Fasules asked if the Village's requirements are driving the height of this building to which Village Manager Franz stated it is.

Mr. Debb stated they could eliminate the public parking and go to four stories, but they would need more help from the Village. Trustee Senak stated there would be some savings with losing a floor. Mr. Debb stated there would be some savings, but also additional expenses.

Trustee Kenwood stated they need to have someone look at an updated proforma with four stories.

Trustee Ladesic stated across the country, apartment buildings are being converted into condos. Mr. Debb stated they would not do this as they have never converted an apartment building of theirs into condos. Mr. Debb stated this is why they will separately meter everything.

Trustee Kenwood asked if the developer has done similar projects to this. Mr. Debb stated they just completed a project like this in Lombard.

Trustee Senak asked if a Special Use Permit is needed as this development is not one of the uses allowed in the C5A zoning district. Planning and Development Director Springer stated all new developments in C5A and C5B zoning districts are required to be processed as Planned Unit Developments, and the mechanism to grant a Planned Unit Development is through a Special Use. Trustee Senak asked if this is one of the special uses permitted in C5A. Planning and Development Director Springer stated a Planned Unit Development is a special use. Trustee Senak asked if this is one of the special uses. Planning and Development Director Springer read from the Village Code Section 10-4-17-1, and retail on the first floor and residential above are permitted. Village Manager Franz stated this is permitted as a Planned Unit Development in C5A or C5B.

Dawn Smith, Executive Director of the Glen Ellyn Chamber of Commerce, stated they did a survey last week and reviewed the results from this survey. Ms. Smith stated 56 members of the Chamber responded to this survey which is about 1/6 of the Chamber's membership. Ms. Smith reviewed the results from this survey and stated 64% of the respondents support the Apex 400 development. Ms. Smith stated 60% of those that were against the development were due to height and size concern. Trustee Fasules asked if a similar survey was planned for the entire community. Economic Development Coordinator Hannah stated it is not.

Lisa Mojica, who resides at 598 Hill Avenue, stated she is a parishioner at St. Petronille's and the President of the Parish Council. Ms. Mojica stated the major issue is the safety of the children and elderly parishioners. Mr. Mojica stated they appreciate the work the staff and Mr. Debb are doing on the safety concerns; however, there are still some unresolved issues. Ms. Mojica stated they are looking to get a professional consultant to help with traffic flow and a new traffic plan as well as St. Petronille's would like three swing gates put in. Trustee Pryde asked if the Village has ever asked for traffic studies for any of the other churches or places that have recurring programs that generate traffic issues in the downtown area to see what the impact is. Planning and Development Director Springer stated not unless the place was proposing some sort of addition on their own or undertook this as a part of their own review of their own issues.

Maureen Harton, attorney with the Diocese of Joliet, stated the Diocese is in full support of St. Petronille's Parish and School. Ms. Harton stated it has been great to work with the Village staff, Planning and Development Director Hulseberg and Village Manager Franz on this project. Ms. Harton thanked Mr. Debb as the developer is going to pave and stripe the lot at the developer's expense. Ms. Harton stated they are not expressing anything on the height, façade or interior as they feel Mr. Debb has done a nice job. Ms. Harton stated they are concerned over getting the requested swing gates installed at the Village's expense. Ms. Harton stated St. Petronille's is uniquely situated as contiguous to this development, and it will be affected by this.

Trustee Enright asked how much the swing gates are. Ms. Harton stated the gates are approximately $2,500 to $4,000 a piece plus the installation cost. President McGinley stated a safety plan for students is required before the Village will issue a permit.

Karen Quam, who resides at 245 N. Main Street, stated her father was an architect, and she is delivering her father's comments on the project. Ms. Quam stated her father feels the project is out of scale with the Central Business District (CBD), and the project does not go with the existing architecture in the downtown. Ms. Quam asked about the Architectural Review Commission (ARC) to which President McGinley stated this commission was removed at the request of the ARC chairman and others. President McGinley stated the responsibilities that the ARC had did not go away, but were moved around. Ms. Quam stated the ARC is very important for a community like this. Ms. Quam stated when you look at location and the existing building on the property, the proposed building seems mammoth and out of place.

Dan Marks, who resides at 376 Turner Avenue, stated he feels the Village is rushing into something that the residents do not want. Mr. Marks stated they should think of historic towns, and these towns do not have a 5-story building in their downtowns. Mr. Marks stated he feels the proposed building is too big, and they are not doing enough work to make the building fit with the downtown look. Mr. Marks showed a picture of a newly-constructed building in Steamboat Springs which has incorporated the living spaces into the streetscape. Mr. Marks stated if you go stand by a building north of Yorktown which is like the proposed building, you will see what the height looks like. Mr. Marks stated the downtown is on the National Register, and if you put a building in the downtown that does not fit the integrity of the town, Glen Ellyn could lose its National Historic Register designation.

Anne Gould, who resides at 609 Newton Avenue, stated in the Downtown Strategic Plan, this parking lot was identified as a possible place for a mixed use building for retail and 30 residential spaces. Ms. Gould stated a 100+ unit residential building does not fit on this site. Ms. Gould stated the sheer bulk of the building is huge, and this 5-story building will take up 75% of the block. Ms. Gould stated the Village Board needs to worry more about growing Glen Ellyn's reputation as a quaint Main-Street community.

Jason Fues, who resides at 620 Prairie Avenue, stated he is a concerned St. Petronille's parent. Mr. Fues stated he has spent a lot of time reviewing the traffic study, and he would like to see a during-construction and post-construction safety plan. Mr. Fues stated the traffic count that was done on August 29th, 2018 did not include all the people coming to the school, including the religious education class members who are there on Wednesday nights. Mr. Fues stated when you look at the last traffic study done in 2010 compared to the traffic study done in 2018, there is an 80% increase in traffic coming toward St. Petronille's.

Barb Lemme, who resides at 688 N. Park Boulevard, stated she is a business owner in the downtown. Ms. Lemme read a section of the Glen Ellyn Zoning Code aloud and stated the downtown is universally valued with historic, architectural

importance. Ms. Lemme stated Glen Ellyn is special and unique, and the Village's qualities should be preserved. Ms. Lemme stated the bulk and the mass of the proposed building are prominent at a high point in the downtown. Ms. Lemme stated the Zoning Code guidelines are established through a process, and variances should only be granted in extraordinary circumstances. Ms. Lemme stated this development undermines the preservation of the Village and granting this variance will set a dangerous precedent.

Elenaor Saliamonas, who resides at 626 Newton, stated this could be a great development for the McChesney site, but not for the former Giesche site. Ms. Saliamonas referred to what downtown Naperville has done with its buildings. Ms. Saliamonas stated she would like the Village to maintain the integrity of this historic town. Ms. Saliamonas stated she would like to see a 3-dimensional mock-up of this proposed building. Ms. Saliamonas stated she understands change is inevitable.

Steve Horvath, who resides at 473 Sunset Circle, thanked the Village Board for public comment on this project. Mr. Horvath also thanked the Trustees for making tough decisions. Mr. Horvath stated he does not have a child in the Glen Ellyn School District. Mr. Horvath stated he feels this project is not just a decision for today, but for the future as well. Mr. Horvath stated he feels this project will bring a positive impact to Glen Ellyn.

Michelle Covington, who resides at 117 N. Park Boulevard, stated they need to relook at the space and consider what impact the proposed restaurants could have on deliveries downtown. Ms. Covington stated questions need to be asked regarding how to handle maximum foot traffic and parking.

Kelli Christiansen, who resides at 445 Turner, stated this corner does need to be developed as it has been empty for four years, but the benefits of this development must outweigh the costs. Ms. Christiansen stated this building will change the landscape of the Village. Ms. Christiansen stated Main Street will be in shade after 5:00 p.m. most days. Ms. Christiansen stated the parking spaces in the development will be shorter and not as wide. Ms. Christiansen stated the Village could lose 11 to 53 spaces along Main Street and Hillside Avenue. Ms. Christiansen stated they need less parking in this development with the proposed parking garage behind the Civic Center. Ms. Christiansen stated the former Giesche site had over 15,000 square feet of retail space, but this development will only have 8,000 square feet so the Village would lose over 7,000 square feet of retail space. President McGinley stated the requested parking variances are for the tenant parking spaces only.

Justin Casazza, who resides at 386 N. Main Street, stated he thinks they are the nearest home to the development. Mr. Casazza stated he feels taking this development down to four stories would make a huge impact.

Maureen Aspell, the Principal at St. Petronille's School, stated her number one concern is for the safety and well-being of the children and families. Ms. Aspell stated the school moves 460 students around on a daily basis, and over 90% of

the students are dropped off and picked up by car. Ms. Aspell stated St. Petronille's will also lose a critical ingress/egress point. Ms. Aspell stated it is unrealistic that there would be no traffic impact, and they are looking to the Village and the developer to continue to address safety concerns. Ms. Aspell stated there needs to be safety plans for during construction and post-construction.

Kenneth Kloss, who resides at 350 Ridgewood Avenue, gave a picture to the Trustees to look at. Mr. Kloss stated has developed two plans: one plan is a proposed land exchange with St. Petronille's and the other plan is an additional five feet given along the commuter parking lot. Mr. Kloss stated he is proposing a plaza with is consistent with the Village's streetscape goals and would help to soften the corner too. Mr. Kloss stated he suggests the development should do more than be a luxury development. Trustee Kenwood asked how many units would be in this proposed plan. Mr. Kloss stated it is the same number of units as the proposed Apex 400 development with a penthouse added with an additional 10 units.

Barbara Munroe stated if the development is built, future generations will wonder why the developer built something of this size and character in the downtown. Ms. Munroe stated Glen Ellyn has a Historical Society for a reason, and they all feel strongly about historic preservation. Ms. Munroe stated a 5-story building would be an affront to the senses. Ms. Munroe stated there are several homes nearby with many children and 3 challenged adults.

Brian Collie, who resides at 614 Lenox, stated he is encouraged that a survey was shared from those in the CBD to those outside the CBD. Mr. Collie stated he appreciates the additional detail that has been shared. Mr. Collie stated the Village Board need to be good and trusted stewards to the community, and the Board has a responsibility to Glen Ellyn. Mr. Collie stated they need to figure out the pain point they are trying to solve with this development and why this development is being pushed forward. Mr. Collie stated Glen Ellyn is winning in the market because it is distinctive, and he feels the development will destroy economic development in Glen Ellyn. Mr. Collie stated they need a development that is smart and distinctive.

Elicia Viola, who resides at 646 Forest Avenue, stated she is a St. Petronille's parishioner, and she is not in favor of the development due to the scale and appearance. Ms. Viola stated if the Village needs growth, they need to take their time on this. Ms. Viola stated she feels this development will change the whole face of Main Street. Ms. Viola stated the Village Board needs to keep the big picture in mind, and this development needs to be something that fits with this 1920s community.

Jim Campbell, who resides at 494 Carleton Avenue, thanked the Village Board for their volunteerism and for building in Glen Ellyn. Mr. Campbell stated he lived in Santa Barbara for the past five years, but Glen Ellyn keeps pulling them back. Mr. Campbell stated branding is everything, and the brand essence of Glen Ellyn is worth a lot. Mr. Campbell stated he appreciates that the Village Board

are custodians of the Village's brand. Mr. Campbell stated he does not think this is the death of Glen Ellyn, he thinks there are minor aesthetic changes that could be done.

Kathy Cornell, who resides at 678 Forest Avenue, thanked the Village Board for serving as volunteer Village Board Trustees. Ms. Cornell stated she estimates there might be 150 tenants in this development, and she does not see this number of people bringing vibrancy to the CBD. Ms. Cornell stated five stories is too much, and she would prefer only three stories. Ms. Cornell stated they could reduce the height of the building if they took away some of the luxury amenities. Ms. Cornell stated she understands development is business, but they need to consider the long-term well-being of the community. Ms. Cornell stated this could be an acceptable building in other suburbs, but she cannot see this building fitting in Glen Ellyn.

Tim Loftus, who resides at 296 Woodstock, read a portion of the Housing section from the Houseal Lavigne survey report. Mr. Loftus stated the Comprehensive Plan and the 2009 Downtown Strategic Plan both talk about 3-story mixed use buildings. Mr. Loftus stated the Village needs to stick with this plan. Mr. Loftus showed pictures of other buildings around Chicagoland and asked the Village to build something like these buildings.

Ted Mihalopoulos, who resides at 370 N. Main Street, stated this building is outside the character and the charm of Glen Ellyn. Mr. Mihalopoulos stated this development is important, but it need to be the right thing to fit Glen Ellyn. Mr. Mihalopoulos stated this building needs to go back to the drawing board.

Mike Wilson, who resides at 716 Crescent Boulevard, showed a picture of Main Street from the 1930s/1940s and stated the Village should go back it what it was with the historic character. Mr. Wilson stated he does not like to see things torn down and showed a rendering of the Giesche building being renovated with a proposed town square that everyone can use and space for retail and restaurants. Mr. Wilson stated there would be parking along the back.

Kim Eichenauer, who resides at 599 Hillside Avenue, stated she is a brand marketer by trade, and Glen Ellyn has charm and character. Ms. Eichenauer stated they need to think toward the future. Ms. Eichenauer stated she has nothing against development in the Village, but this building does not fit. Ms. Eichenauer asked how they could rethink the process and is not sure that tweaking the current plan will do what is needed.

Chris Wilson, who resides at 537 Phillips, stated she has been in preservation since 2002. Ms. Wilson stated she feels this building will destroy the character of the town. Ms. Wilson stated the Citizens for Glen Ellyn Preservation did an online petition five days ago for anyone against this development. Ms. Wilson stated 477 people responded since January 17th with 358 being Glen Ellyn residents and 119 who have previously lived in Glen Ellyn or frequent Glen Ellyn. Ms. Wilson stated 95% of the respondents have issues with the size of the building being too big, and the building would ruin the charm and the character of the Village. Ms. Wilson

asked about the cost to the Village for any remediation that might be needed. Village Manager Franz stated any remediation that might need to be done at this point is unknown, but will be 100% the developer's expense. Village Manager Franz stated this is stated in the Redevelopment Agreement.

President McGinley stated the Village Board need to give direction on public parking and the cornice height.

Trustee Senak asked if the height variation is needed to maximize profitability. Mr. Debb stated they need the 5th floor to be financially profitable and to return 6%.

Trustee Ladesic stated he does not think the project is viable if you take away the public parking. Trustee Ladesic stated they need that parking for the vitality of Main Street. Trustee Ladesic stated there are 6- and 7-story buildings around town.

Trustee Fasules stated there has to be a valid reason to build a 5-story building. Trustee Fasules stated there needs to be a historic aesthetic to the community.

Trustee Senak stated he feels there is no metric that justifies public parking in this development.

President McGinley asked the Village Board's feedback on public parking in this development.

Trustees Enright, Kenwood, Ladesic and Pryde support public parking in this development. Trustee Ladesic stated public parking is an essential piece of this development. Trustee Kenwood stated there are over 900 on a waiting list to get parking so there is a metric to support parking in this development. Trustees Fasules and Senak do not support parking in this development.

President McGinley stated 312 employee parking spaces are needed for businesses along Main Street alone. President McGinley stated she supports public parking in this development. President McGinley stated public parking can remain in the presentation for the January 28th Village Board Meeting.

President McGinley asked the Village Board's feedback on the cornice. Trustee Kenwood stated they can keep the cornice as he does not view this as a height issue. Trustee Enright stated he has a problem with the height of the building altogether and would favor anything that keeps the height down. Trustee Senak stated it would be good to keep this lower, and if not, at least architecturally consistent with other buildings in the downtown. Trustee Pryde stated he is in favor of lowering the cornice, and Glen Ellyn is a patchwork of architecture.

Trustee Pryde stated the Village Code says one parking space for every three seats per restaurant. Trustee Kenwood stated there is not enough handicapped parking in the community.

Trustee Fasules stated the cornice is a moot point. Trustee Ladesic stated the corner could be massaged cost-effectively, and the cornice is not a "make-it or break-it" for him.

President McGinley stated the Village Board's direction is a 3-foot cornice. Trustee McGinley asked for the Village Board's feedback on the architecture of the building.

Trustee Kenwood stated the corner should be something that goes architecturally with the Village. Trustee Kenwood suggested pushing back part of the 5th floor to ease the mass of the building in front. Mr. Debb stated they would lose nine units if they pushed this floor back. Mr. Debb stated they will bring back options for a rounded corner and possible 5th-floor building pushback at the January 28th Village Board Meeting.

Trustee Enright stated he thinks the building looks nice. Trustee Enright stated pushed 5th floor back some would appease some residents a bit and help the building look a bit different. Trustee Enright stated he would like to see something done in this building for low-income families.

Trustee Senak stated they need to go back to the architecture and see what is historically consistent. Trustee Senak gave examples of buildings around Chicagoland. Trustee Senak stated he does not necessarily have a problem with the current proposed design.

Trustee Pryde stated he has no tremendous problems with the architecture. Trustee Pryde stated he would not want to see a lot of units disappear out of this building. Trustee Pryde stated they can play around with the height and volume of the building. Trustee Pryde stated he feels as they cannot set back the 5th floor as they will lose unites.

Trustee Fasules stated more Trustees seem to be open to additional TIF funding for this project if the design can be changed. Trustee Fasules stated he thinks we can do better.

Trustee Ladesic stated they need to preserve history, but build for the future. Trustee Ladesic stated this is not an 1800s look, and it is the dawn of a new architecture style. Trustee Ladesic stated possible softening of the corner is not a deal-breaker for him.

President McGinley stated the Village Board has suggested softening the corners of the building, some reduction on the cornice and some possibly push back on the top floor.

President McGinley stated the Village Board is still in the question phase so they have not addressed every issue that came up tonight. President McGinley stated consultants over the years have recommended at least 400 new residential units in the downtown to stay viable. President McGinley stated businesses express interest and then leave because there is not parking and not enough foot traffic.

Planning and Development Director Springer reviewed the next steps again and stated this Preliminary Planned Unit Development will go before the Village Board for approval at the January 28th Village Board Meeting. Planning and Development Director Springer stated the Final PUD Approval will come to the Plan Commission and the Village Board.

Trustee Senak stated the Trustees benefited by seeing a 3-D model during the Civic Center parking garage discussion and asked if they could see this for the proposed building. Trustee Ladesic stated this would be nice, but it is not a requirement.

RESULT:	**DISCUSSION ONLY**

F. Other Items

None

G. Adjournment

RESULT:	**APPROVED [6 TO 0]**
MOVER:	John Kenwood, Village Trustee
SECONDER:	Bill Enright, Village Trustee
AYES:	Enright, Fasules, Kenwood, Ladesic, Pryde, Senak
PRESENT:	McGinley

Respectfully submitted Debbie Solomon, Recording Secretary

Reviewed and approved John A. Chereskin, Village Clerk

Minutes
Village of Glen Ellyn
Regular Meeting
Monday, January 28, 2019
7:00 PM
Glen Ellyn Civic Center, Galligan Board Room

A. Call to Order

B. Pledge of Allegiance

President McGinley led the Pledge of Allegiance.

C. Roll Call

Attendee Name	Title	Status	Arrived
Diane McGinley	Village President	Present	
Bill Enright	Village Trustee	Present	
Gary Fasules	Village Trustee	Present	
John Kenwood	Village Trustee	Present	
Pete Ladesic	Village Trustee	Present	
Craig R. Pryde	Village Trustee	Present	
Mark Senak	Village Trustee	Present	
John Chereskin	Village Clerk	Present	
Mark Franz	Village Manager	Present	
Greg Mathews	Village Attorney	Excused	
William Holmer	Assistant Village Manager	Present	
Christina Coyle	Finance Director	Present	
Staci Springer	Director	Present	
Phil Norton	Chief of Police	Present	
Rich Daubert	Senior Civil Engineer	Present	
John Sterrett	Village Planner	Present	
Gregory Jones	Attorney	Present	

D. Village Recognition: (Village Clerk)

1. The Village would like to thank Ed Crawford for his service to the Environmental Commission.

E. Audience Participation

President McGinley read a statement on the process of this meeting and public comment.
Trustee Fasules asked for a Point of Order if a resident makes a comment and a Trustee has a follow-up question. President McGinley stated for the Apex 400 Development, we will hear from the Village staff and then the developer. President McGinley stated it will then be open to the Village Board for questions and then it will be open to public comment. President McGinley stated after public comment, the Village Board will start their deliberations, and public comment will be closed. President McGinley stated each resident will be allowed three minutes to speak and then the Village Board can follow-up or ask questions if needed.

F. Consent Agenda - The following items are considered routine business by the Village Board and will be approved in a single vote in the form listed below:

RESULT:	**APPROVED [6 TO 0]**
MOVER:	John Kenwood, Village Trustee
SECONDER:	Craig R. Pryde, Village Trustee
AYES:	Enright, Fasules, Kenwood, Ladesic, Pryde, Senak
PRESENT:	McGinley

Motion to approve the following items including Payroll and Vouchers totaling $2,223,940.45 (Trustee Kenwood):

1. Total Expenditures (Payroll and Vouchers) - $2,223,940.45. The vouchers have been reviewed by Manager Franz prior to this meeting, and are consistent with the Village's purchasing policy.

2. Glen Ellyn Village Board - Regular Meeting - Jan 14, 2019 7:00 PM

3. Glen Ellyn Village Board - Special Workshop Meeting - Jan 14, 2019 7:30 PM

4. Approve a Change Order of the Snow Hauling Contract, Awarded to Marcott Enterprises, Inc., of Villa Park, Illinois, in an Amount of $20,000, to be Expensed to the General Fund (Public Works Director Hansen)

5. Resolution No. 19-01, A Resolution Concerning the Determination of the Glen Ellyn Village Board that Change Order Number One - Final with Swallow Construction Corporation is required for the Roosevelt Road Water Main Improvements Project, for a revised and final contract cost of $554,839.23, to be expensed to the Water & Sewer Fund (Public Works Director Hansen)

6. Ordinance NO. 6668 -VC, An Ordinance to Amend Section 9-2-12 (Municipal Permit Only Parking Lots) and Section 9-5-8 (Schedule H; Parking Limits) of the Glen Ellyn Village Code (Police Chief Norton)

7. Ordinance No. 6669 - VC, An Ordinance Approving a Text Amendment to the Glen Ellyn Zoning Code (Planning and Development Director Springer)

8. Resolution No. 19- 02, A Resolution Accepting Public Sidewalk Improvements, a Sidewalk Easement, a Watermain Easement, Bill of Sale Associated with the Roosevelt Glen Corporate Center 739-799 Redevelopment Roosevelt Road, and to Reimburse the Developer for Sidewalk Improvements in the amount of $54,167.00 to be Expensed to the Roosevelt Road TIF Fund (Planning & Development Director Springer)

G. Hillcrest Avenue Right-of-Way (Presented by Planning and Development Director Springer) (Trustee Kenwood)

1. Ordinance No. 6670, An Ordinance Vacating a Portion of the Hillcrest Avenue Right-of-Way to the Glen Ellyn Park District and the B.R. Ryall YMCA of Northwestern DuPage County.

Planning and Development Director Springer presented background on this proposed vacation and stated the Glen Ellyn Park District and the B.R. Ryall YMCA of Northwestern DuPage County

(YMCA) have requested that the Village vacate the entire 60-foot wide Hillcrest Avenue public right-of-way between Illinois Street and the YMCA property -approximately 400 feet in length. Planning and Development Director Springer showed an overview map of the area and stated the Park District and the YMCA have negotiated and arranged for the Park District to purchase four of the five YMCA lots and incorporate these lots into Manor Park. Planning and Development Director Springer stated this vacation will create additional open space for Manor Park and will further expand it to connect to the small portion of the park currently on the west side of the right-of-way.

Planning and Development Director Springer stated the Village staff has reviewed the request and does not believe there is any public need or purposed to retain this portion of the Hillcrest Avenue right-of-way. Planning and Development Director Springer stated since the vacation will result in additional open space for a public park and will be a public benefit, no cost for the vacated right-of-way should be incurred by either party.

Trustee Pryde asked if there would be an access easement in the right-of-way to get to the water tower. Planning and Development Director Springer stated there is access to the Newton Avenue water tower from Newton Avenue. Planning and Development Director Springer stated the Village will be retaining a utility and drainage easement over the whole right-of-way.

Trustee Kenwood asked about the piece that is still Village property to which Planning and Development Director Springer stated this will probably be addressed at some point in the future.

RESULT:	**APPROVED [6 TO 0]**
MOVER:	John Kenwood, Village Trustee
SECONDER:	Craig R. Pryde, Village Trustee
AYES:	Enright, Fasules, Kenwood, Ladesic, Pryde, Senak
PRESENT:	McGinley

H. Apex 400 (Presented by Planning and Development Director Springer) (Trustee Pryde)

President McGinley reviewed the process of the order of speakers and when public comment would be done. President McGinley stated the Village Board has read all the spoken and written public comments on this proposed development up to this point.

Planning and Development Director Springer provided background on the Apex 400 development and stated petitioners Larry Debb and John Kosich of GSP Development and 400 Main LLC, are requesting approval of a Special Use Permit for a Preliminary Planned Unit Development with deviations and the Exterior Appearance of a proposed mixed-used development. Planning and Development Director Springer showed an overview map of the current site and stated the subject site is located on the northwest corner of Hillside Avenue and Main Street and is comprised of 1.55 acres. Planning and Development Director Springer stated the property is commonly known as 400 N. Main Street and 418-424 N. Main Street and includes the former Giesche Shoe property and Village-owned Main Street parking lot.

Planning and Development Director Springer stated in May 2018, there was a pre-application meeting for this proposed development at a Plan Commission meeting. Planning and Development Director Springer showed a rendering of the original proposed elevation and stated the Village staff worked with the developer to remove the contemporary elements on this proposed building. Planning

and Development Director Springer stated a member of the Historic Preservation Commission suggested the developer should draw on elements of architecture that are already used in the downtown. Planning and Development Director Springer stated after these suggestions, the developer submitted a revised elevation with brick and stone materials, a cornice and cloth awnings, among other updated.

Planning and Development Director Springer stated 70% of the units will be one bedroom or smaller, but the developer can covert some units to two bedroom units if this is wanted. Planning and Development Director Springer stated the rents of these units would be approximately $1,700 per month to $3,300 per month.

Planning and Development Director Springer reviewed some of the alterations that have been done with the plans over the past several months. Planning and Development Director Springer stated the developer will need to match the Village's Streetscape Plan which will be decided later in 2019.

Planning and Development Director Springer stated there will be first floor public parking with 137 parking spaces proposed. Planning and Development Director Springer stated parking for the tenants would be on the second floor and only accessible from Hillside.

Planning and Development Director Springer stated at last week's Village Board Workshop, there was much discussion regarding the height and mass of the proposed building. Planning and Development Director Springer showed an updated elevation and stated after this discussion, the developer did revise the plans to eliminate approximately 1,000 square feet of rentable space on the southeast corner of the building. Planning and Development Director Springer stated the building would still have 107 units, and the building would be 43 feet high from the sidewalk. Planning and Development Director Springer stated the developer also added brick by the parking garage entrance on Hillside Avenue as well as trees to soften the appearance of the building on Hillside. Planning and Development Director Springer stated the maximum height on the newly proposed building would be 58.5 feet from average grade, and the requested height has been reduced to 61 feet as the cornice height was reduced.

Planning and Development Director Springer showed the Main Street elevation and stated staff had asked the developer to add a stone band around the building to separate the retail section from the residential section so the developer did add limestone to the second story for this. Planning and Development Director Springer stated staff had requested that brick be added to the whole rear of the building instead of the smooth pre-cast finish.

Planning and Development Director Springer showed pictures of 5- and 6-story buildings around town that are next to 1-story buildings.

Planning and Development Director Springer reviewed the TIF incentive and stated the developer is seeking a revised incentive of $1,200,000 over five years due to the updated plans for the northeast corner of the building. Planning and Development Director Springer stated Kane McKenna has reviewed the original proforma and was comfortable with this as was the Village staff. Planning and Development Director Springer stated there will be a projected $7,800,000 to the Village in the TIF fund through 2035.

Planning and Development Director Springer reviewed the Redevelopment Agreement and stated this agreement is to protect the Village and outline exactly what is expected of the developer. Planning and Development Director Springer reviewed the main bullet points and stated there is an

open book approach where the developer has to allow the Village access to the financials at any point during the project. Planning and Development Director Springer stated the goal is for construction to commence by November 30, 2019, and the public parking portion available by February 29, 2020.

Trustee Kenwood asked about the TIF process. Village Manager Franz stated it is performance-based, and since the taxes are in arrears so this will be taxed fully the year after the project is completed. Village Manger Franz stated from the increment, the Village will then reimburse the developer annually based on the Redevelopment Agreement.

Trustee Senak asked the Village's total cost. Planning and Development Director Springer stated this is the $1,200,000 to the developer through the TIF. Trustee Senak asked about the other payments provided and if these payments required by code. Planning and Development Director Springer stated there is a requirement in the subdivision ordinance that is called the Land and School Donation Requirement. Planning and Development Director Springer stated this is commonly called the Developer Donations, and this is at the discretion of the Village. Planning and Development Director Springer stated this is based on formulas that have been tested in court, and this is an estimate of what the donation should be. Planning and Development Director Springer stated then both parties agree on it. Planning and Development Director Springer stated the Village's discretionary amount is $169,000, and this will be paid at the time the developer picks up the permit.

Trustee Kenwood asked if there is a net add of trees what is currently there. Village Planner Purvis stated Public Works requested that the plants be 40 foot on center and that the trees be larger diameter trees. Village Planner Purvis stated the development will match whatever Streetscape Plan is decided on by the Village Board later in 2019.

Trustee Fasules asked if the Village could do the streetscape piece with the developer contributing the dollars to this so it would be the same throughout the Village. Planning and Development Director Springer stated this could be a possibility. Trustee Fasules asked if the downtown infrastructure can handle this development. Professional Engineer Daubert stated the Village retained RJN Group to review the infrastructure, and they feel the current water system is adequate to serve the system. Professional Engineer Daubert stated as a part of the Streetscape Project, they will be looking at all sanitary sewers, especially inflow and infiltration of stormwater. Professional Engineer Daubert stated from an infrastructure standpoint, they are confident the system can handle this development. Professional Engineer Daubert stated there is still quite a bit of capacity in the system of the Glenbard Wastewater Authority, and there is still plenty of room for growth.

Larry Debb, with GSP Development, stated they have made some major and minor changes to the plans after hearing all the comments, including lowering the southeast corner of the building. Mr. Debb stated anyone they have talked to is not against the concept of the project being a mixed use development. Mr. Debb stated this development will bring economic benefits to the Village. Mr. Debb passed around samples of the materials they are using, including the dark red and natural bricks and the stone being used for the cornice and medallions.

Trustee Enright asked about the 1,000 square foot reduction. Mr. Debb stated they were able to make some two bedroom apartments into one bedroom apartments.

Trustee Kenwood stated the developer was not asking for any funds from the Village with the original design of the building. Trustee Kenwood stated the Village has now asked the developer to

take out approximately 1,000 square feet of rentable space and add brick to the south and west sides of the building. Mr. Debb stated about 40% of the additional funds being requested from the Village are due to the loss of roughly over 1,000 square feet, and 30% is for the additional brick and the other 30% is for the full height stone on the building.

Trustee Kenwood asked about the building's architecture. Mr. Debb stated they walked up and down Main Street and took many different architectural elements from what they saw. Trustee Kenwood asked about the windows. Roimon Hepburn, Associate Architect at FitzGerald Associates Architects in Chicago, Illinois, stated the windows have to be operable as the building code requires a certain amount of ventilation, and the windows will have the hand crank. Mr. Debb stated there will be mullions in the windows.

Trustee Senak stated he favors a mixed use development, but he opposes the five stories. Trustee Senak stated he has not talked to anyone who disfavors four stories, and he made a personal request to Mr. Debb to take the building down to four stories. Mr. Debb stated going down to four stories would take the entire top floor off and lose 30 units. Mr. Debb stated if they took away the public parking floor, this would add another $2,000,000 to the TIF incentive request. Trustee Senak stated then the TIF incentive would go from a requested $1,200,000 to $3,200,000. Mr. Debb stated it would be approximately $3,000,000. Village Manager Franz stated the overall proforma and TIF increment would change with this. Mr. Debb stated the public would lose 130 spaces. President McGinley stated at last week's Village Workshop, the majority of Trustees favored keeping public parking in this development.

Trustee Fasules asked if the design is to the Village's standards for parking. Mr. Debb stated it will be a slight reduction from standard. Mr. Debb stated their building in Lombard is 90% occupied with only 30% vacant parking. Mr. Debb stated it does not work if they cut down the number of spaces and add units.

Trustee Kenwood asked about possible remediation on the site. Mr. Debb stated they will go 9 to 11 feet down to the clay barrier as the pollution is sitting on top of this clay barrier. Mr. Debb stated anything left will be enclosed in concrete. Trustee Fasules asked about underground parking if that much dirt is being taken out of the site. Mr. Debb stated they looked at possible underground parking, but it would cost millions of dollars, and the maintenance for underground parking costs more.

Trustee Enright asked about the north end of the building by Santa Fe Restaurant. Mr. Debb stated the two-story parking deck would be by Santa Fe. Trustee Enright asked about the space between the parking garage wall and Santa Fe. Mr. Hepburn stated it is approximately four to five feet.

Trustee Senak asked about adding units on an extension by Glenwood Avenue. Mr. Debb stated St. Petronille's was opposed to this, but in theory, it could be feasible. President McGinley stated at the beginning of the project, the Village Board agreed that they would stay with only the property the developer currently had in order for the project to move forward.

Trustee Kenwood asked why the Diocese of Joliet would have any say on where the units are if the developers are building on their own property. Trustee Senak stated the church may have issues with that, but he does not think they have any standing legally to enforce or resist this.

Trustee Ladesic asked about the start and completion dates. Mr. Debb stated they will go in first

for the permit for the parking structure in the next three months or so. Mr. Debb stated the whole project should take approximately 18 months, and he hopes to have the public parking done four months after the start of the project.

Jim Murphy, who resides at 501 Forest Avenue, Unit #404, stated he represents the Glen Aster Condominiums where they have 1.75 spaces per unit. Mr. Murphy stated the owners in his building are always looking for more spaces. Mr. Murphy stated the Apex 400 residents will be looking for more spaces too. Mr. Murphy stated the parking spaces are a smaller width than is required by code. Mr. Murphy stated the traffic study was done in August when it is the low traffic point of the year. Mr. Murphy stated there is a similar project on the edge of Yorktown Mall. Mr. Murphy stated he believes GSP will have a hard time renting these apartments at the price point. Mr. Murphy stated the developer has listened to comments, but there are more residents against five floors then they should do four floors.

Maureen Harton, Attorney for the Diocese of Joliet, stated she is representing St. Petronille's and the Diocese of Joliet. Ms. Harton stated Father Doherty, Principal Aspell and others at St. Petronille's support this project, and the Village would look a lot better if this property was developed. Ms. Harton stated developing this project could possibly benefit St. Petronille's as well. Ms. Harton thanked the Village staff, the Village's Planning and Development Department, Village Manager Franz, Attorney Mathews and Police Chief Norton for helping to address any issues. Ms. Harton stated their agenda is to ensure the safety of the 460 students at the school as well as their parishioners during and post-construction. Ms. Harton stated the Village is going to finance the swing gates they requested, and they are grateful for this. Ms. Harton stated they are putting no opinion forth on the other issues associated with this proposed development.

Trustee Senak asked if the church and Diocese are willing to discuss an exchange of property. Ms. Harton stated they are conceptually open to this if it benefits the parish, but they will not sell any property. Ms. Harton stated there was a similar property swap a year ago in the village of Villa Park. Ms. Harton stated they do not need approval from the Vatican if it is just a property swap. Trustee Fasules asked how long it would take to put together a property swap to which Ms. Harton stated it could be put together in two to three weeks.

Mr. Debb stated plans were laid out 8 months ago, but every proposed plan would also have to include the office building as well. Village Manager Franz stated the Village has had a work group working on this for the past five to six months, and all these issues came up, but nothing was workable. Trustee Ladesic stated there were these same issues with the OPUS development.

Claudia Schafer, who resides at 410 Melrose, Unit #302, stated there are three whys for this project: the need for parking, the need for the developer's profit margin and the need for luxury rentals. Ms. Schafer asked what data there is to support this type of rental for empty-nesters and millennials. Ms. Schafer stated Glen Ellyn need luxury with affordability. Ms. Schafer stated Trustee Senak had a list of statistics showing that there is plenty of parking in the Village and asked who is driving the claim that there is not enough parking. Ms. Schafer stated this is not the first project where the Zoning Code has needed to be thrown out. Ms. Schafer stated this should be put on the April ballot as a referendum.

Brian Kennedy, who resides at 501 Forest Avenue, Unit #606, stated in the last week and a half, there has been a petition online called Stop Apex 400 Development, and this petition has over 400 signatures on it. Mr. Kennedy stated they need to learn from the Recession of 2008. Mr. Kennedy asked why corners are being cut on the specs. Mr. Kennedy stated this is a big project that is

undiversified.

Barb Lemme, who resides at 688 N. Park Boulevard, stated the online petition has over 664 supporters who are strongly opposed to this development. Ms. Lemme stated this online petition is the only means of assessing public sentiment. Ms. Lemme stated if you estimate each of the 664 supporters as residing a minimum of 12 years in Glen Ellyn, this equals 7,728 years of involvement in and devotion to the Village. Ms. Lemme stated Mr. Debb's loyalty is to the development and his investors. Ms. Lemme stated they should be giving more weight to the residents on this, and the Trustees need to listen to them.

Mike Formento, who resides at 23W029 Harkberry Drive, stated this development will leave an indelible mark on the community. Mr. Formento stated the Trustees' vote should go toward the charm and character of the Village. Mr. Formento stated this development ignores the Zoning Code, the Village's Comprehensive Plan and the Village's Downtown Strategic Plan. Mr. Formento stated this type of housing would ruin the character of the community as well as the historic image of the downtown. Mr. Formento stated if the Trustees have said no to any of this, they should vote no as well. Mr. Formento stated the Trustees' should choose wisely on what their legacy will be.

John Van Tassel, who resides at 571 Anthony Street, stated he supports this development, and the rental properties will be beneficial. Mr. Van Tassel stated this development will help with the taxes going down, and it will be good for the downtown area.

James Vercillo, who resides at 594 Park Plaza, stated he supports this project. Mr. Vercillo stated he and his wife attend St. Petronille's, and they would like to downsize so this development would be great.

Charles McCluskey, who resides at 116 Newton Avenue, stated he has taught at Hadley Junior High for the past 13 years. Mr. McCluskey stated he would love to see this approved as his parents will be looking for a place like this, and this development would benefit them. Mr. McCluskey stated this development could also benefit many of his friends' parents as well. Mr. McCluskey stated this development would continue to support Glen Ellyn and the local businesses.

Trustee Senak asked if Mr. McCluskey is opposed to four stories. Mr. McCluskey stated he is fine with four or five stories.

Christine Collins, who resides at 614 Lenox Avenue, stated she is representing herself and her husband. Ms. Collins stated they would like to see development come to the Village, but this building is too tall. Ms. Collins stated they have not seen drawings that show what this development will do to Blackberry Market and other businesses on Main Street. Ms. Collins stated they should not rush this decision, and she thinks there are some costs and trade-offs that need to be evaluated. Ms. Collins stated during the August 29th traffic study, the majority of students were riding their bikes. Ms. Collins stated they need the right proposal for this location, and she hopes the Village Board does not vote on this tonight. Ms. Collins read the end of a letter that her husband wrote.
Patrick Finn, who resides at 363 N. Main Street, stated there is a 40% increase in traffic according to the traffic studies done in 2010 and 2018. Mr. Finn asked why they are rushing to do this as the Village is sitting on an asset that they own.

Jon Brazier, who resides at 547 Hillside Avenue, stated Glen Ellyn is natural, organic and authentic. Mr. Brazier stated he works in the development field and has worked with great architects and engineers. Mr. Brazier read a report from a friend who works in development and

reviewed this project. Mr. Brazier stated the friend says the building is too tall compared to other buildings among other items. Mr. Brazier stated he urges the Village to take more time on this, and they need bring new talent to work with the developer and members of the community to create opportunities through designs that seek to combine the site's highest value best use, compatible and with clear respect for the Village's historic fabric and charm to give this approach a chance and give the Village Board more time.

Kim Eichenauer, who resides at 599 Hillside Avenue, stated she is reading a letter from resident Brian Collie. Mr. Collie thanked the Village Board for their service. Mr. Collie said Glen Ellyn's brand is distinctive and strong, and the Village has small-town charm. Mr. Collie said they are at risk to destroy the driver of the Village's success with this development, and they will be forced to live with this. Mr. Collie said there are still many concerns that need to be addressed. Ms. Eichenauer stated this development could negatively impact the Village. Ms. Eichenauer stated millennials think historic charm and preservation is important. Ms. Eichenauer stated the sheer size and scale is contradictory to the Village's charm, and she implores the Village to take more time with this.

Eleanor Saliamonas, who resides at 626 Newton Avenue, stated the Village Board's predecessors made the Zoning Code to fit the historical character of the town. Ms. Saliamonas stated the height variance and the Lot Coverage Ratio variance will scar the Village. Ms. Saliamonas stated the developer seems reluctant to do a 3-dimensional mock-up of this building. Ms. Saliamonas asked why this building needs a swimming pool as there are pools close-by.

Anne Gould, who resides at 609 Newton Avenue, stated this building could work at other sites, including the McChesney site. Ms. Gould stated the tall buildings in the downtown are outside this Zoning District. Ms. Gould stated they need to look at the whole building and its elements in context. Ms. Gould stated she understand the Village Board will be talking in the future about evaluating building heights. Ms. Gould stated there are best practices for this core zone. Ms. Gould stated she is not against development, but this development should be on another site. Ms. Gould stated there will be parking lost on Main Street and Hillside Avenue. Ms. Gould stated the Village Board should take more time for on this.

Ken Kloss, who resides at 350 Ridgewood Avenue, stated he had the idea of a land transfer so the development would not go three feet into the alley. Mr. Kloss showed a proposed rendering he did and stated his drawing gives the appearance of a smaller building. Mr. Kloss stated part of the Glen Ellyn Streetscape Planning is to have a place for people to meet. Mr. Kloss stated OPUS had a proposed promenade which was good.

Kelli Christiansen, who resides at 445 Turner Avenue, stated she is not opposed to development on this site and thanked the developer for the updates. Ms. Christiansen stated this property is a part of the south Main Street Downtown Historic Register District. Ms. Christiansen stated the proposed building is in violation of the Zoning Code because of the height and bulk. Ms. Christiansen stated according to the 2009 Downtown Strategic Plan, the process is the preserve and maintain the historic buildings, and the buildings should be 2-, 3- or 4-stories. Ms. Christiansen stated the developers should be advised to keep new construction compatible with existing structures.

Bernie Botheroyd, who resides at 20 Walnut Road, states he taught at Glenbard West High School. Mr. Botheroyd stated he had seen many kids return to Glen Ellyn who are looking for places to live as well as friends looking to down-size. Mr. Botheroyd stated since Glen Ellyn is short on this type of housing option, his friends have moved to Downers Grove or Lombard.

Dan Lyne, who resides at 361 N. Main Street, stated he runs one of the most successful transaction advisory teams in the country. Mr. Lyne stated he know lots of developers and people in real estate, and GSP Development is a start-up company. Mr. Lyne stated there is a conflict with the data about a mixed use development. Mr. Lyne stated empty-nesters do not want small short-term rentals. Mr. Lyne stated they do need to develop the Giesche site.

Tim Loftus, who resides at 296 Woodstock, showed a picture from the 2009 Downtown Strategic Plan of what Main Street should look like. Mr. Loftus stated there should be no 5-story buildings in C5A. Mr. Loftus stated this building would set a precedent, and this development will be the beginning of a downhill slope for the community. Mr. Loftus stated they do not need this project in its current form. Mr. Loftus asked the Village Board what side of history they want to be on.

Marc Giovingo, who resides at 655 Hillside Avenue, stated this development would provide an opportunity for young professionals to move into the community, and he supports this project.

Steve Horvath, who resides at 473 Sunset Lane, thanked the Village Board Trustees for their service. Mr. Horvath stated he is concerned about public safety with this project, and he is happy that the Village and developer have agreed to a safety plan with St. Petronille's. Mr. Horvath stated someone gives design input, 300 people will not like it, and if another person gives design input, another 300 people might not like this as well. Mr. Horvath stated this development will be an economic benefit to the Village, and he supports this project.

Scott Shoub, who resides at 711 Duane Street, stated he is the owner of the office building near this proposed development, and he is probably the one person most affected by this project. Mr. Shoub showed an overview picture of where his building is in reference to the proposed development and stated he supports development and progress in town. Mr. Shoub stated he thinks this proposed building is neat, but will be too big. Mr. Shoub stated St. Petronille's is a block away from this proposed development, and the church was sought out for their opinion; however, no one came to see him at all.

Trustee Senak asked if Mr. Shoub would be interested in a discussion on this to which Mr. Shoub stated he would be. Trustee Kenwood stated the land swap would abut Mr. Shoub's building.

Julie Mackey, who resides at 1812 Wakeman Court, stated she is in favor of the project as proposed. Ms. Mackey stated they need to look at the project that is coming to them. Ms. Mackey stated the proposal is well-thought out and well-designed. Ms. Mackey stated this is the modern progressive development that the downtown needs, and this project would help the downtown businesses thrive. Ms. Mackey stated Glen Ellyn needs to get progressive and get with the times. Ms. Mackey stated she considers this project great with older people downsizing and young professionals moving to the Village. Ms. Mackey stated this project would benefit the community.

Margaret Salyer, who resides at 780 N. Main Street, stated she has a small business in town, and she supports the project. Ms. Salyer stated this gives people the option of renting a small apartment home. Ms. Salyer stated her sister tried to move to Glen Ellyn two years ago, but her sister could not find anything like this development. Ms. Salyer stated the aesthetics of the project will be subjective, and she thinks the project is great. Ms. Salyer stated there needs to be an openness to change and flexibility. Ms. Salyer thanked the Village Board to collaborating with the community.

Kathy Cornell, who resides at 678 Forest Ave, stated the 5- and 6-story buildings in town do not sit on the top of a hill at the entrance to the town. Ms. Cornell asked who benefits from the luxury

amenities, and she feels people could live without the amenities so the building can be restructures to a smaller size. Ms. Cornell stated she is concerned about remediation. Ms. Cornell stated she is not afraid of change but is afraid of spoiling the downtown with an unsuitable project.

Robert Mitchell, who resides at 210 Regent Street, stated other projects have been done in town that are a benefit to the community, and not a detraction. Mr. Mitchell stated more parking is needed, and the developer has done a decent job to address concerns of many residents. Mr. Mitchell stated this is the best project the Village has seen for this site, and it seems economically viable. Mr. Mitchell stated they need more tax revenue, and he supports this project.

James McDonnell, who resides at 871 Crescent Boulevard, stated his wife teaches at St. Petronille's School, and his kids attend school at St. Petronille's as well. Mr. McDonnell stated he is against the scale of this building and the number of variances for zoning and height. Mr. McDonnell stated the proposed building is modestly attractive, but it is too tall. Mr. McDonnell stated a smaller scale building would bring smaller scale profits. Mr. McDonnell stated Glen Ellyn has historic character, and he has not met anyone who is opposed to a 3- or 4-story development on this site. Mr. McDonnell stated this proposed building does not fit in Glen Ellyn, and he thinks the project should go up for a referendum.

Elicia Viola, who resides at 646 Forest Avenue, stated the rents do not fit with the needs of her husband and her wanting to downsize, or their kids coming back to Glen Ellyn. Ms. Viola stated the developer and staff got a lot done in the past six days so imagine what else could be done in two months. Ms. Viola stated she does not want this to be a rushed building as they are making a decision on a building that will be in the Village for 200 years. Ms. Viola stated there has not been a 3-dimensional model of the building, and they need to get this right.

Trustee Kenwood asked about a scale model versus a 3-dimensional model. Planning and Development Director Springer stated a 3-dimensional view was provided in the packet, and the 3-dimensional model is a variety of new technology. Ms. Viola stated something like this would be good. Trustee Fasules stated some of the Trustees have requested this.

Jamie Simoneit, who resides at 864 Woodland, stated he has a building near this and was approached by the OPUS developer to sell his building which he would still do for the same price. Mr. Simoneit stated the Glen Ellyn Bible Church gave the Village an offer on this property several years ago. Mr. Simoneit stated he would be happy to help consult on this, and the project meets the client's needs, but not the community's needs. Mr. Simoneit stated he has been forced to come in for variations on very minor things. Mr. Simoneit stated sunny streets are streets that thrive. Mr. Simoneit stated other tall buildings are not on Main Street. Mr. Simoneit stated he is pro-development and pro-mixed use.

President McGinley called for a break at 10:08 p.m.

President McGinley called the meeting back to order at 10:14 p.m. President McGinley read a news brief that said extreme cold is coming in the next few days, and the Glen Ellyn Police Station and the Glen Ellyn Public Library are being used as warming centers.

Mr. Debb stated they analyzed, designed and drawn plans for this project for over a year. Mr. Debb stated he is not inexperienced in construction as he has done well over $1 billion in construction and 6,000,000 square feet of space in the Chicago market alone. Mr. Debb stated they have a 200-unit building in Lombard with these rents that have former Glen Ellyn residents living in them. Mr.

Debb stated there are currently trees that shadow Main Street now. Mr. Debb stated he feels they brought an amazing project to the table which will be a benefit to the community. Mr. Debb stated they did everything that was asked of them as well.

Trustee Kenwood asked if the Diocese was open to the land-swap proposal. Mr. Debb stated the Diocese would be swapping more land the Village would be so there would be some selling involved as it is not an equal swap. Mr. Debb stated this would then take the proposed development right up against Mr. Shoub's building. Mr. Debb stated it would take at least six months to draw up new designs.

Trustee Kenwood asked if Mr. Debb would be open to a little more time and possibly get some other talent in on this proposed project. Mr. Debb stated FitzGerald has done a great job on this building. Mr. Debb stated the big issue is the height on the building, and they have investigated all angles on this. Trustee Kenwood asked if getting rid of the pool would solve the problem to which Mr. Debb stated it would not.

Trustee Ladesic stated they are not losing the downtown, but building for the future to keep Glen Ellyn on the map. Trustee Ladesic stated the Village needs a development like this, and this development fills a number of needs, including parking, residential and retail. Trustee Ladesic stated he did an Internet search, and Glen Ellyn is really not on the map. Trustee Ladesic stated this is not an ideal development, and he felt OPUS was ideal, but it was not right for everyone. Trustee Ladesic stated there are talented designers in town. Trustee Ladesic stated if you ask 10 different people about architectural style, you would get 10 different answers. Trustee Ladesic stated there are other 5-, 6- and 7-story buildings that have melded into the Village's streetscape. Trustee Ladesic stated when you come into town from the north, west and east, there are five-story or higher buildings. Trustee Ladesic stated there is not enough convenient parking. Trustee Ladesic stated this is the 5th time there has been interest in this property. Trustee Ladesic stated any development needs to be viable, and there are always risks involved. Trustee Ladesic stated it is not true that they would lose the Historic District designation if this development is built. Trustee Ladesic stated this development is not different from any other, and people will be against things whether it affects them or not. Trustee Ladesic stated this development meets the needs and maximizes the return to the Village. Trustee Ladesic stated he is open to the bumped-in corner as presented on tonight's plans.

Trustee Fasules stated progress is a part of Glen Ellyn, but Glen Ellyn is tradition too. Trustee Fasules stated there will be a development on this site, and this development will be mixed use. Trustee Fasules stated they need to balance tradition with progress and take four to six more months on this project. Trustee Fasules stated they owe it to the community to make the plan better.

Trustee Pryde stated he thinks the process has worked well this time, and a mixed use development should be at this property. Trustee Pryde stated this development will be serving a great need that is going on throughout the country for this type of housing. Trustee Pryde stated renters are renting much longer than they did 20 years ago, and today's renters become tomorrow's buyers. Trustee Pryde stated the amount of retail and residential is appropriate, and he fully believes they need to retain public parking on this site. Trustee Pryde stated he has been involved in some way with the three most-recent residential buildings in the Village, and the traffic counts are similar to this. Trustee Pryde stated he appreciates the effort taken in working with St. Petronille's. Trustee Pryde stated he is in favor of reducing the height of the building at Main Street and Hillside with the bumped-in corner. Trustee Pryde stated he is generally in favor of the building architecture, and he is in favor of the project overall.

Trustee Senak stated he knows that a concept of a mixed use development on this site is supported by the community. Trustee Senak stated he knows a 5-story building does not conform to the Zoning Code, the Comprehensive Plan or the Downtown Strategic Plan. Trustee Senak stated many residents are against a 5-story building on this site, and his solution is to limit the height of the building to four stories by removing the public parking floor. Trustee Senak stated the 2001 Comprehensive Plan states parking is not well-distributed in the downtown, and it is his belief that the Village needs more parking in the downtown. Trustee Senak stated they should not be doing a $3,000,000 building that goes against the Zoning Code, the Comprehensive Plan and the Downtown Strategic Plan as well as is opposed by many residents. Trustee Senak stated they should work with Mr. Debb to go down to four stories, and they need to be given more time to make this a first-class development.

Trustee Enright stated they need a mixed use development with retail and residential. Trustee Enright stated he has heard the concerns from the public on the size of the building so he suggested they move the fifth floor back so the building was not so imposing at Main Street and Hillside Avenue. Trustee Enright stated he is concerned as he is just seeing the updated plans and wonders if some residents will change their minds with this update. Trustee Enright stated the Village Board also just heard about the TIF incentive update. Trustee Enright stated the Plan Commission did approve this proposed project unanimously, and this should be taken into consideration. Trustee Enright stated it would be good to have one to two weeks to look at the updated design and updated TIF incentive request so they can hear the residents' feedback on the updates.

Trustee Kenwood stated the parking metrics do indicate they need parking as there are over 900 people on the parking permit wait list. Trustee Kenwood stated there are handicapped parking gaps as well. Trustee Kenwood stated this is a tough decision. Trustee Kenwood stated they have made progress in terms of the design of the building, but he does have concerns with the mass of the building. Trustee Kenwood stated he appreciates the southeast corner of the building coming down as shown in the updated plans. Trustee Kenwood stated they should reduce the northeast corner of the building in a similar way. Trustee Kenwood stated as the Village Board just received the updated plans and TIF incentive request, he would like to digest this. Trustee Kenwood stated he likes the balconies, but wants to ensure the balconies are kept respectable. Trustee Kenwood asked about the noise factor on the deck. President McGinley stated they will have to follow the current noise ordinances.

President McGinley asked if the developer was willing to make further changes. Mr. Debb stated they had looked at the south corner of the building and felt this was more important. Mr. Debb stated they could do the same plan on the northeast corner of the building that was suggested for the southeast corner of the building. Mr. Debb stated the deal will be done if it is not voted on tonight.

Trustee Ladesic asked what is being looked at to satisfy. Trustee Ladesic stated lopping off the north corner of the building has no benefit to the developer. Mr. Debb stated these will not be party decks, but it will be accessible roof space.

Trustee Fasules asked about the tax stream over the next 100 years. Trustee Ladesic asked at what cost are they willing to spend taxpayers' dollars. Trustee Senak stated for the right modifications, the Village is actually willing to contribute more money to make the project economically viable.

President McGinley stated she supports this development as they are putting Glen Ellyn first. President McGinley stated this development will be for the good of the Village. President McGinley

stated they continued to improve the project, and the Village staff does not allow any project to come before the Village Board that is not the best for Glen Ellyn and could be upheld in a court of law. President McGinley stated they are being disingenuous to the developer, and the developer has met the suggestions that were given last week. President McGinley stated the Village needs additional foot traffic in the downtown, and many suggestions have been vetted.

Trustee Senak stated the discussion should be extended because the Village Board need to know what it would take from a cost standpoint from the Village to take this building to four stories. Mr. Debb stated it would be approximately $4,500,000 to take the top floor off. President McGinley stated the developer has a right to due process.

Trustee Kenwood stated they should do the bump-in on the north corner of the building as well as there would be less impact coming over the tracks. Mr. Debb stated he cannot do four stories, and he cannot lose the amenities.

Village Manager Franz stated there were conversations about eliminating the fifth floor, but this proved a non-starter as it would not be a viable revenue stream moving forward.

Trustee Senak asked about having conversations about additional land. Mr. Debb stated they made plans for this possibility, but St. Petronille's was not fine with this.

Trustee Enright asked if the Village Board could have one more week on this. Mr. Debb stated his financing expired at the end of 2018, but was extended to this night.

A motion was made by Trustee Fasules to do a Two-Part Reading.

Attorney Jones stated there will be a vote on the design improvements, a vote on the Redevelopment Agreement
Attorney Jones stated there is a redevelopment ordinance and a zoning ordinance, but because the redevelopment ordinance is changing based on tonight's discussion, they will do a motion on this piece separately.

Trustee Fasules stated he is asking for a Two-Part Reading which is an informal vote now with an official vote at the next Village Board Meeting. Attorney Jones stated there is no First Reading Ordinance in Glen Ellyn's Code. Attorney Jones stated the ordinances as presented tonight can be voted on tonight. There was discussion regarding the different votes and what was included in each vote.

Motion to Table Vote to Approve Redevelopment Agreement between the Village of Glen Ellyn and GSP Development LLC

A motion was made by Trustee Senak and seconded by Trustee Fasules to table the vote on this proposed development until a time when the Trustees' concerns on the project are addressed.

Trustees Enright, Fasules and Senak voted "aye." President McGinley and Trustees Kenwood, Ladesic and Pryde voted "nay." The motion failed to carry.

RESULT:	**DENIED [3 TO 4]**
MOVER:	Mark Senak, Village Trustee
SECONDER:	Gary Fasules, Village Trustee
AYES:	Enright, Fasules, Senak
NAYS:	McGinley, Kenwood, Ladesic, Pryde

Motion to Table Vote for One Week to Approve Redevelopment Agreement between the Village of Glen Ellyn and GSP Development LLC

A motion was made by Trustee Senak and seconded by Trustee Fasules to table the vote on this proposed development for seven (7) days.

Trustees Enright, Fasules and Senak voted "aye." President McGinley and Trustees Kenwood, Ladesic and Pryde voted "nay." The motion failed to carry.

RESULT:	**DENIED [3 TO 4]**
MOVER:	Mark Senak, Village Trustee
SECONDER:	Gary Fasules, Village Trustee
AYES:	Enright, Fasules, Senak
NAYS:	McGinley, Kenwood, Ladesic, Pryde

1. Ordinance No. 6671, An Ordinance Approving a Redevelopment Agreement Between the Village of Glen Ellyn and GSP Development, LLC Concerning 400 & 418-424 N. Main Street.

A motion was made by Trustee Pryde and seconded by Trustee Ladesic to approve Ordinance No. 6671, an Ordinance Approving a Redevelopment Agreement Between the Village of Glen Ellyn and GSP Development, LLC Concerning 400 & 418-424 N. Main Street, modifying the agreement to allow the lowering the northeast tower to match the southeast corner of the design presented in the plans presented tonight and increase the TIF Incentive from $1,200,000 to $1,360,000, subject to attorney review.

President McGinley and Trustees Enright, Kenwood, Ladesic and Pryde voted "aye." Trustees Fasules and Senak voted "nay." Motion carried.

RESULT:	**APPROVED AS AMENDED [5 TO 2]**
MOVER:	Craig R. Pryde, Village Trustee
SECONDER:	Pete Ladesic, Village Trustee
AYES:	McGinley, Enright, Kenwood, Ladesic, Pryde
NAYS:	Fasules, Senak

2. Ordinance No. 6672, An Ordinance Granting Approval of a Special Use Permit for a Preliminary Planned Unit Development and the Exterior Appearance of a Mixed Use Development to be Known as Apex 400 and Proposed at the Northwest Corner of Main Street and Hillside Avenue and Commonly Known as 400 & 418-424 N. Main Street

A motion was made by Trustee Pryde and seconded by Trustee Ladesic to approve Ordinance No. 6672, an Ordinance Granting Approval of a Special Use Permit for a Preliminary Planned Unit

Development and the Exterior Appearance of a Mixed Use Development to be Known as Apex 400 and Proposed at the Northwest Corner of Main Street and Hillside Avenue and Commonly Known as 400 & 418-424 N. Main Street, with the recommendations as put forth by the staff.

Trustee Kenwood stated they are asking for a week, but Mr. Debb has said his financing will fall through after tonight. Mr. Debb stated PNC Bank gave him a proposal for 60% which ended on December 31, 2018. Mr. Debb stated the other 40% will come from himself and Mr. Kosich. Mr. Debb stated PNC Bank agreed to hold the financing until this meeting to keep the interest rate down. Mr. Debb stated he is respectfully asking for a vote tonight.

During the vote, Trustee Senak stated he is profoundly disappointed and discussed his feelings on this. President McGinley stated the Trustees are done with deliberation. Trustee Senak stated he is resigning from his remaining term as Trustee and left the meeting at 11:35 p.m.

Attorney Jones stated in order for a Trustee to resign, this has to be submitted in writing and notarized.

President McGinley and Trustees Kenwood, Ladesic and Pryde voted "aye." Trustees Enright and Fasules voted "nay." Trustee Senak was an official abstention vote per Attorney Jones. Motion carried.

RESULT:	**APPROVED AS AMENDED [4 TO 2]**
MOVER:	Craig R. Pryde, Village Trustee
SECONDER:	Pete Ladesic, Village Trustee
AYES:	McGinley, Kenwood, Ladesic, Pryde
NAYS:	Enright, Fasules
ABSTAIN:	Senak

I. Reminders

1. A Village Board Meeting is scheduled for Monday, February 11, 2019 at 7:00PM in the Galligan Board Room of the Glen Ellyn Civic Center.

2. A Village Board Workshop is scheduled for Tuesday, February 19, 2019 at 7:00PM in Room 301 of the Glen Ellyn Civic Center.

J. Other Business

Trustee Fasules asked Mr. Formento if a Two-Part reading was ever dismissed. Mr. Formento stated it never was to his knowledge.

K. Adjournment

RESULT:	**APPROVED [5 TO 0]**
MOVER:	Bill Enright, Village Trustee
SECONDER:	John Kenwood, Village Trustee
AYES:	Enright, Fasules, Kenwood, Ladesic, Pryde
ABSENT:	Senak
PRESENT:	McGinley

Respectfully submitted Debbie Solomon, Recording Secretary

Reviewed and approved John A. Chereskin, Village Clerk

Glen Ellyn Village Board
535 Duane Street
Glen Ellyn, IL 60137

Meeting: 02/11/19 07:00 PM
Department: Police
Department Head: Phil Norton
Category: Purchase
Prepared By: Christine Miller

SCHEDULED

AGENDA ITEM (ID # 3779)

DOC ID: 3779

Waive competitive bidding and approve the purchase of a fixed LPR camera system from Minuteman Security Technologies in the amount of $47,958.68 to be expensed to the Forfeiture Fund and waive competitive bidding and approve the purchase of a LPR parking enforcement camera system from Minuteman Security Technologies in the amount of $46,783.00 to be expensed to the Parking Fund (Police Chief Norton)

EXECUTIVE SUMMARY

This proposal was discussed at a Board workshop meeting on January 14, 2019, where it was approved in concept to move forward. Additional information concerning the cost of a server has been added to the proposal for clarification, since the January 14, 2019 Board workshop. The estimated cost of the server is between $7,000 and $10,000, which would be paid for through the federal seized funds account. Details on the server cost are outlined on page 9 of the attached memo.

During several recent investigations, Glen Ellyn Police Officers have queried traffic cameras and license plate reader (LPR) cameras located in other jurisdictions, which produced investigative leads and helped to identify criminal suspects. At this time, the Glen Ellyn Police Department lacks the ability to capture this data due to not having cameras installed on our main thoroughfares entering and exiting the Village. We have recognized our current limitations and attempted to install our existing covert pole cameras on Roosevelt Road. These have provided useful leads in several investigations, however they have limitations due to the fact these cameras were not designed for this purpose.

License plate reader (LPR) cameras are a solution for our stated problem. LPR cameras are designed to capture, recognize, and analyze license plate data. LPR cameras can capture 5,000 plates per minute and that data can be queried by plate, partial plate, or by vehicle images. Plates can be entered into a database to provide alerts when they are captured. The LPR data can be shared with other law enforcement agencies to assist in their investigations. LPR cameras can be mounted on squad cars to assist in parking enforcement. The LPR software can be configured to recognize permit parking and time zones based on geo location. The software can also interface with pay-by-plate applications. By utilizing LPR technology, many of the parking enforcement duties can be automated, making this function more effective and efficient.

LPR technology produces a large amount of data and we must consider a cost effective solutions to transmit and house the data. Some LPR companies require the data to be streamed to their cloud

servers through cellular modems at each camera location. Other vendors allow for cellular transmission or point-to-point radio transmission. We have decided to focus on a point-to-point radio system, which transmits the data directly from the fixed LPR cameras to an in-house server at the Department. This system has a higher up front cost, but eliminates the costly cell service and cloud storage fees. Additionally, the point-to-point radio system can be expanded as the system grows and evolves over time.

Two main vendors of LPR technology were focused on, being Genetec and Vigilant. Competitive quotes were obtained from three vendors for a solution for fixed cameras on Roosevelt Road and a mobile LPR camera system in the parking enforcement vehicle. The recommendation is being made for the Genetec platform. This system allows both fixed and mobile LPR cameras to connect with one interface, allows for future growth, and can interface with our existing pole cameras. Having one system will eliminate the cost of redundant video systems.

It is proposed that LPR cameras be installed at Roosevelt Road and Baker Hill Drive and be purchased with funds from the federal seized funds account. Additionally, it is proposed that LPR cameras be installed in the parking enforcement vehicle and purchased with funds drawn from the parking fund account.

BACKGROUND

The Department has identified the need to improve our capability in identifying vehicles in certain areas of the Village, specifically entering and exiting the Village on Roosevelt Road. Roosevelt Road, being a main thoroughfare, has been used by several individuals fleeing after committing criminal acts. During several criminal investigations, we have had success in positively identifying suspect vehicles or corroborating evidence, by utilizing traffic cameras in neighboring jurisdictions. Being that those cameras are outside of Glen Ellyn, they are not immediately accessible and some may require a subpoena, which lengthens the time to identify a suspect vehicle. Additionally, once suspects flee the Village the neighboring jurisdictions cameras may not capture the suspect vehicle due to the distance. We need the ability to capture the vehicles before they exit the Village to expedite our investigations. Currently, we have limited or no ability to monitor and/or identify vehicles entering/exiting the Village.

In 2018, the Department received approval to purchase two covert pole cameras, which have added value to several investigations. They have aided in the identification of theft offenders, identification of hit and run vehicles, recovery of stolen construction equipment, and have allowed the Department to conduct covert surveillance in areas experiencing a higher volume of activity.

In order to address our need to identify suspect vehicles, we deployed our covert pole cameras on Roosevelt Rd and Baker Hill Dr. We chose this intersection due to available electrical power and proximity to Rt.38, Rt.53, and I-355. These pole cameras provided useful evidence in several investigations, however they have several limitations when used to monitor a high volume of traffic. The limitations of the covert pole cameras are as follows;

- Lacks the ability to read/capture license plates (effected by lighting and speed of vehicles)

- Lacks search parameters and video must be manually reviewed
- Data retention is limited to 12-15 days
- Data recovery is through cellular or Wi-Fi connection

The current pole cameras are useful for the mission they were designed, but are not a long-term solution for monitoring/identifying vehicles. Data recovery is through a cellular connection, which at times exceeds the cellular data limits and has a reoccurring cost. The Wi-Fi option requires close proximity and suffers from slow connectivity when reviewing video. License plate data is rarely captured, due to lighting and/or vehicle speeds, which does not accomplish the main objective of deploying the camera at this location.

During one investigation into the theft of stolen construction equipment, a Detective spent eleven hours reviewing video in order to locate the suspected offender. Based on an average Detective hourly rate, it cost $510.84 to review the video in that case. This was a large timeframe of video, which exceeded the data limits. We attempted to extract the video via Wi-Fi and learned that the download would have taken several days due to poor connectivity. Neither of these situations would have been efficient for the investigation, which required the camera to be taken out of service, removed from the light pole, and brought back to the Department, so the video could be extracted.

ANALYSIS

We began researching options to capture vehicle data in a more efficient and cost effective manner. License Plate Reader (LPR) cameras are a way to accomplish our goals and overcome the current limitations. LPR cameras have the ability to positively identify license plates and can store the data in a manner that can be later queried during an investigation. LPR cameras are also routinely used to automate parking enforcement tasks.

In researching LPR cameras, several goals were identified; (1) to improve data collection and recovery, (2) to increase data retention, (3) increase the usability of the captured data, and (4) to have an integrated system of fixed traffic cameras and mobile LPR cameras (parking enforcement).

License plate reader (LPR) cameras are designed to capture, recognize, and analyze license plate data. Records of the captured plates can be queried and/or compared to uploaded license plate databases or "hot files." Hot files can be SOS wanted files, stolen vehicles, Amber Alerts, or, customized files containing suspect vehicles, timed parking areas, or parking frequent violator files. This would allow for a positive notification if a vehicle entered on a hot list was captured by the LPR cameras. The database of captured license plates can also be used as an investigative tool, by querying license plates and time frames. The data provided by these LPR cameras is sufficient to positively identify a vehicle and license plate and how many times the vehicle was captured by the system. This technology allows for increased efficiencies and a proactive response, whereas traditional video cameras are a reactive tool.

In addition to fixed LPR cameras, they can be mounted on a squad car to capture plates while

patrolling or during parking enforcement. During parking enforcement, LPR cameras would increase efficiencies by automating many of the human tasks involved. The parking enforcement officer would be able to eliminate the task of chalking tires and looking for physical parking permits. With LPR, they would instead drive through a parking lot, capturing the plates with the camera. The automated software would then alert the officer if a vehicle was past the time limit or in an area without a parking permit. This is accomplished by creating "hot lists" for time zones or permit areas, based on geo-location. The LPR cameras compare captured plates to those "hot lists." This would allow a parking officer to be more efficient in parking enforcement, thereby creating more available time for calls-for-service. I contacted Downers Grove Police Department and learned their mobile LPR cameras allowed for greater efficiencies, which resulted in the reduction from three parking enforcement officers to one. Fixed LPR cameras can also be mounted at the entrance/exits of parking garages or lots to further assist in parking enforcement. These systems will also provide parking data such as, lot occupancy numbers and times. These data points can be used when determining when and how many parking permits to be issued.

Several alternatives for data transmission were evaluated. The two systems focused on were cellular based systems and a point-to-point radio system. Cellular based systems operated by having a cellular modem in each camera, which transmits the data to a cloud or in-house server. Currently, the cost to have a cellular card at each camera would be approximately $36.00 per month. The limitations of a cellular based system is the bandwidth and reoccurring cost. A point-to-point radio system operates by placing a radio transmitter at the camera location and a radio receiver at the termination location. That termination location would be at the Department, where the data would be stored on a server. A radio system has a higher upfront cost to install the equipment, but is more cost effective in the long run to operate and eliminates the reoccurring cost of cellular cards. A point-to-point radio system has a much greater bandwidth capability, allowing for the communication of still images and streaming video. A point-to-point radio system does require a line of sight to operate, but is achievable at great distances. Currently, the College of DuPage operates a point-to-point radio system for their cameras around campus and the Village Links operates a point-to-point radio system for a remote camera. Point-to-point radio systems can be installed that cover great distances, such as the entire Village. One of the vendors completed a plan and quote to install such a system.

ALTERNATIVES

In researching vendors for an LPR camera solution, I spoke with Minuteman Security Technologies, Johnson Controls, and Vigilant Solutions. There are two main suppliers for LPR technology that we focused on, Genetec and Vigilant Solutions.

Both Minuteman Security Technologies and Johnson Controls utilize Genetec software/hardware to process the LPR data. In addition to processing LPR data, Genetec offers solutions to manage conventional video, LPR camera parking enforcement, mobile LPR cameras for squad cars, Community Connect, and the ability to combine several camera systems into one platform. Community Connect is a cooperative program that would allow the Village to partner with businesses to establish a network of video cameras. Genetec also interfaces with several vendors of

parking kiosks and "pay by plate" mobile apps. Genetec offers several products that are modular and have the ability to interconnect if a system grows or expands.

Vigilant Solutions offers a product that processes the LPR data from fixed traffic cameras and mobile squad LPR cameras for parking enforcement. Vigilant will also interface with several vendors of parking kiosks and "pay by plate" mobile apps.

The following proposals were requested from the above companies;

1. Solution for fixed LPR cameras, covering eastbound and westbound traffic, at the intersection of Roosevelt Road and Baker Hill Drive. This intersection consists of two westbound lanes, one left turn lane onto northbound Baker Hill Drive, three eastbound lanes, and one right turn lane onto northbound Baker Hill Drive.

2. A cost effective solution for retrieving the LPR data from Roosevelt Rd & Baker Hill Dr.

3. Solution for increasing efficiencies of our parking enforcement with the use of mobile LPR cameras in the parking enforcement vehicle.

Minuteman Security Technologies

Minuteman Security Technologies (MST) has been in business for 30 years with experience in designing, installing, and supporting advanced electronic security systems. They operate 8 regional support offices and 11 technical support depots throughout the United States, with the closest office in Tinley Park, IL. They have completed several municipal projects in the area, see attached list. In addition to completing the requested proposals, they completed a proposal for a city wide wireless network.

MST Proposal: Fixed LPR cameras at Roosevelt Rd. & Baker Hill Drive

For the installation of fixed LPR cameras on Village owned light poles with 24/7 available power and Genetec Security Center Software to process LPR data. Two fixed LPR cameras covering westbound Roosevelt Rd, two fixed LPR cameras covering eastbound Roosevelt Rd, installation of a point-to-point radio system to stream LPR data back to the Department, installation of radio equipment on the roof of the Department to aggregate the data, and the proposal includes an 18TB server at a cost of $7,765.00. The server was initially sized to handle this proposed system and a future proposed city wide wireless network. This proposed system can utilize a smaller server which would reduce the cost. They feel that four LPR cameras will adequately capture the data at this intersection by placing cameras at areas where multiple lanes are choked down to two lanes. Proposal included one year of software subscription and one year of hardware warranty.

Total Proposal: $45,963.68

Proposal Amount (less server): $38,198.68

Optional Proposal Additions:

- Additional 4 years of software subscription $1,120.00
- Additional 4 years of extended hardware warranty $7,640.00
- One year warranty upgrade adv. replacement $1,000.00

Yearly reoccurring costs for MST fixed LPR cameras:

Software license and updates $80.00 per cameras (4) = $320.00*

*Discounted 5 year package would be $280.00 per year.

MST Proposal: Mobile LPR cameras in the Parking Enforcement Vehicle (Mobile CITY System)

For turnkey installation of two LPR cameras in the parking control vehicle and system configuration. Software for the Genetec City system, which is able to perform long term (2-5 days) time zone enforcement and permit zone enforcement. Technicians will integrate the LPR system with "pay by plate" apps and parking kiosks. Includes training and one year support for the City System. Also includes five year extended hardware warranty with advanced replacement ($13,914.00). Cellular connection with static IP address is to be supplied by the Village, which is currently setup in the parking control vehicle.

Proposal #1 (Mobile CITY System): $46,263.00

Proposal #2 (Mobile CITY System): $46,783.00

Proposal #2 includes an additional 4 years of software license and updates.

Johnson Controls

Johnson Controls is a well established company with over 50 years of experience with complex security integrations serving; schools, hospitals, airports, mass transit, and government buildings. They have a global presence in the industry. Johnson Controls has an extensive sales and support network in our area. They have completed several large scale projects.

Johnson Controls Proposal: Fixed LPR cameras at Roosevelt Rd. & Baker Hill Drive

For the installation of LPR cameras mounted on Village owned light poles with 24/7 available power and Genetec Security Center Software to process LPR data. Four LPR

cameras covering westbound traffic and two LPR cameras covering eastbound traffic, installation of a point-to-point radio system to stream LPR data back to the Department, installation of radio equipment on the roof of the Department to aggregate the data. They quoted a 200GB server option to store LPR data at the Department.

Proposal:	$68,952.37
Server Option (additional):	$4,836.25

Johnsons Controls Proposal: Mobile LPR cameras in the Parking Enforcement Vehicle

For the installation of two LPR cameras in the parking control vehicle, Genetec Software for Mobile City System, all parking enforcement equipment, Pay-by-plate single, main processing unit. JCI will install all equipment in the designated vehicle the Department chooses. Includes training and five year warranty. Cellular connection with static IP address is to be supplied by the Village, which is currently setup in the parking control vehicle.

Proposal:	$57,325.80

Vigilant Solutions

Vigilant Solutions is one of the main providers of LPR technology and they provide solutions for capturing LPR data, the analysis of LPR data, and LPR cameras for parking enforcement. They service over 1,000 law enforcement agencies and have an extensive database which includes commercial LPR data. The database is accessed through a "LEARN" subscription, which the Department currently purchases for a yearly cost of approximately $5,000.00.

They provide solutions for fixed LPR cameras and mobile LPR cameras. Their mobile system can be used for parking enforcement, by providing notifications of overtime parking or permit violations. Their fixed camera system operates with a cellular connection and transmits LPR data to the Vigilant servers, where it can be accessed through their software. Their LPR cameras capture only still images of the plates/vehicles and do not have the capability of capturing video.

Vigilant Proposal: Fixed LPR cameras at Roosevelt Rd. & Baker Hill Drive

For the installation of LPR cameras mounted on Village owned light poles with 24/7 available power and their software to process the LPR data. Three LPR cameras covering eastbound traffic and three LPR cameras covering westbound traffic, installation of a cellular modem to transmit LPR data to Vigilant servers, all software to process LPR data, and one year hardware warranty. Installation costs are not included and would be quoted after a site visit.

Proposal #1:	$59,930.00
Proposal #2:	$67,130.00 *

**Proposal #2 includes extended hardware warranty for years 2-5.*

Yearly reoccurring costs for Vigilant fixed LPR cameras:

Software license and updates: $525.00 per cameras (6) =	$3,150.00
Cellular service: $36.00 per month per camera (6) =	$2,592.00

Vigilant Proposal: Mobile LPR cameras in the Parking Enforcement Vehicle

Vigilant will supply two mobile LPR cameras for the parking enforcement vehicles, mounting brackets, parking enforcement software, one year warranty, end user training, and for a Vigilant technician to visit. Installation of the cameras to be completed by the Village. LPR data can be integrated with any third party "pay by plate" apps or Kiosks for a fee.

Proposal #1:	$18,883.00 *
Proposal #2:	$10,633.00 **

**Proposal #1 includes extended hardware warranty for years 2 and 3.*

***Proposal #2 includes standard one year warranty on hardware/software. Also requires a minimum two year commitment to a LEARN and parking subscription.*

Yearly reoccurring costs for Vigilant mobile LPR cameras:

Software license and updates: $525.00 per camera (2) =	$1,050.00
Parking enforcement toolkit fee	$1,000.00
Third party integration	$1,000.00
LEARN subscription	$5,000.00

GENETEC VS. VIGILANT SYSTEMS

There are some notable differences between the Genetec and Vigilant systems.

- Vigilant requires the data to be sent to their servers through a cellular connection. Genetec allows the user to transmit the data through a cellular connection or through a point-to-point radio system. Utilizing a point-to-point radio system greatly reduces the reoccurring fixed costs and allows for greater bandwidth.
- The Vigilant system has substantially higher reoccurring costs.
- Vigilant cameras only record still images of the vehicles/plates due to having one camera in

each LPR device. Genetec has two cameras in each LPR device, allowing for still images of license plates and simultaneous video if configured. A point-to-point radio system provides the necessary bandwidth to transmit still images and video, where a cellular connection would suffer.

- Vigilant uses analog cameras which do not provide the higher quality of images the Genetec digital cameras offer.
- Genetec offers the ability to integrate LPR cameras and standard video cameras into one system. This streamlines the operability and allows for future expansion without purchasing another system.
- Genetec offers additional solutions, such as Community Connect. This is a cooperative agreement with businesses to create a network of cameras, benefiting the Village and local businesses by sharing costs.
- We can view our own LPR data from Vigilant, but require a yearly LEARN subscription to view LPR data from other Vigilant clients. Genetec allows data sharing between Genetec users with the one time Federation software purchase and an MOU between users.
- After using the software from both providers, I believe Genetec has a more updated and user friendly interface than Vigilant.

I believe the Genetec System offers a more complete platform that is suitable for the Village. The Genetec platform can accomplish the goals outlined in this memo. (1) The system would improve data collection and recovery. The cameras capture and identify license plates and store the data where it can be accessed with a user friendly interface. (2) The system increases our ability to retain data at a central server. Data retention time periods can be configured based on need. (3) The system will improve the usability of the data. As an investigative tool, we would be able to query time frames, plates, and create custom reports based on investigative need, without having to manually review video. As a parking enforcement tool, it would allow the automation of several tasks, increasing our efficiency and accuracy. (4) The system would allow us to have an integrated system of fixed LPR cameras, mobile parking LPR cameras, and any other cameras we currently have or may have in the future. By having one system, we improve the operability, data recovery, and eliminate the cost of redundant video systems.

The Genetec system can operate with a point-to-point radio system, which eliminates the reoccurring costs of a cellular data plan and provides a better result. Genetec is able to provide still images of the license plates and simultaneous video.

The Genetec Mobile CITY System provides an effective parking enforcement solution for Glen Ellyn. Currently, the parking enforcement officer manually chalks tires, refers to hardcopy printouts of the "frequent parking violators list" and the "CBD employee parking list", and inspects permit hang tags. These functions can be automated with this system, allowing for increased efficiencies and accuracy. Additionally, fixed LPR cameras can be placed at parking garages or lots to increase the effectiveness of the parking enforcement.

RECOMMENDATION

I am recommending we purchase fixed LPR cameras to be installed at the intersection of Roosevelt Road and Baker Hill Drive and a mobile LPR camera system to be installed in the parking enforcement vehicle. I further recommend that we purchase the Genetec System because of what it provides and the options to expand the system in the future.

I further recommend we choose Minuteman Security Technologies (MST) to complete the work they proposed for the fixed camera system and the Mobile CITY System:

- MST proposal for the fixed LPR camera system totaling $47,958.68, which includes additional four years of software subscription, additional four years of extended hardware warranty, and one year of upgrade advantage replacement coverage. This proposal does not include a server, which can be evaluated and purchased separately with assistance from the Village IT Department.
- MST proposal for the LPR parking enforcement camera system totaling $46,783.00 which includes an additional four years of software license and updates.
- **In addition to the costs outlined above, a server would need to be purchased. MST quoted a server for $7,765.00, capable of handling both LPR projects. I spoke with Mark Binkerd, who estimated a server to cost between $7,000 and $10,000, depending on project needs. It would be decided during project implementation, if MST or IT Department would supply server.**

MST's fixed LPR proposal came in at the lowest cost without diminishing what we are receiving. Genetec mobile LPR system is more costly than Vigilant, however Genetec has several benefits over Vigilant, which have been outlined in this memo. MST has been very responsive and informative during this process. I contacted area police departments that had systems installed by MST and they were happy with the Genetec product. Additionally, they were satisfied with the workmanship and the ongoing service provided by MST.

This recommendation is supported by management. This proposal was discussed at a Board workshop on January 14, 2019, where it was agreed to in concept.

BUDGET IMPACT

It is proposed that the LPR camera project for Roosevelt Road and Baker Hill Drive, including the cost of the server, be purchased with funds drawn from the federal seized funds account (27200-580110). This purchase was not budgeted in 2019, but there are forfeiture funds available for this purchase. The Federal Forfeiture Fund has $638,000 as of the end of January. The 2019 budget earmarks $509,300. Federal Forfeiture Funds will also continue to be received throughout 2019.

It is also proposed that the LPR camera project for the parking enforcement vehicle be purchased

with funds drawn from the parking fund account (53000-580110). This was not budgeted in the Parking Fund for 2019. However, as staff discussed with the Board at the workshop on January 14, 2019, staff believes this is a worthwhile project and a budget amendment will be considered at the February 25, 2019 Village Board meeting.

Attachments:

- Minuteman Security Technologies Proposals
- Johnson Controls Proposal
- Vigilant Proposals

ATTACHMENTS:

- LPR - Johnson Controls Proposal (PDF)
- LPR - Minuteman Security Technologies Proposals (PDF)
- LPR - Vigilant Proposals (PDF)

September 5, 2018

This Proposal has been prepared for:

Glen Ellyn Police Department

65 S Park Blvd, Glen Ellyn, IL 60137
Phone: (630) 547-5450

Wireless P2P & LPR Project

Todd Eastman
Business Development Executive
Emerging Technologies Specialist
708.606.6760
todd.eastman@jci.com

Michael Janousek
Business Development Executive
Commercial Construction- Fire & Security
708.655.6864
michael.janousek@jci.com

Darrin Doan
Account Executive
Advanced Service Integration
630.779.5993
darrin.doan@jci.com

Johnson Controls
2010 Swift Dr. Oak Brook, IL
60523

This Document is Confidential

CORPORATE OVERVIEW

The future is being built today, and Johnson Controls is making that future more productive, more secure and more sustainable. We create intelligent buildings, efficient energy solutions, integrated infrastructure and next generation transportation systems that work seamlessly together to deliver on the promise of smart cities and communities. At its core, that promise is about delivering innovation that make people's lives – and the world – better.

Johnson Controls is a global diversified technology and multi industrial leader serving a wide range of customers in more than 150 countries. Our commitment to sustainability dates back to our roots in 1885, with the invention of the first electric room thermostat. We are committed to helping our customers win and creating greater value for all of our stakeholders through strategic focus on our buildings and energy growth platforms.

COMMERCIAL SECURITY AND FIRE SAFETY SYSTEMS

Integrated security systems and solutions to keep your environments safe and protected

When optimizing a building's security and fire safety, you need solutions that protect people, secure assets and lower operating costs — and that's what we deliver for businesses worldwide. Our access control, fire detection, mass notification, and video surveillance solutions protect your business by making sure your commercial security and fire systems perform on demand as designed. We're the industry's most trusted partner for security and fire safety, specializing in complex integrations with more than 50 years of experience serving schools, hospitals, airports, mass transit, government facilities and 30 percent of Fortune 1000 companies. No matter what size or type of facility, we offer flexible, cost-effective solutions.

Our Values

Integrity First

We promise honesty and transparency. We uphold the highest standards of integrity and honor the commitments we make.

Customer Driven

We win when our customers win. Our long-term strategic relationships provide unique insights and the ability to deliver exceptional customer experiences and solutions.

Purpose Led

We believe in doing well by holding ourselves accountable to make the world a better place through the solutions we provide, our engagement in society, the way we do business, and our commitment to protect people and the environment.

Future Focused

Our culture of innovation and continuous improvement drives us to solve today's challenges while constantly asking 'what's next.'

One Team

We are one team, dedicated to working collaboratively together to create the purposeful solutions that propel the world forward.

Dear Sergeant Monson:

Thank you for allowing Johnson Controls the opportunity to provide Glen Ellyn Police Department with our proposal.

As an industry leader, Johnson Controls' desire is to bring experience, industry insight and value to our customers by providing solutions that deliver lasting results while help keeping risk to a minimum. Your business is our business and helping to reduce your losses while improving operations means Johnson Controls is consistently evaluating your issues and needs.

Johnson Controls provides integrated security solutions to organizations like yours throughout the world. In North America, Johnson Controls maintains hundreds of full-service brick and mortar offices, staffed by more than 10,000 company-trained employees, including over 3,700 service personnel. With unparalleled presence across the U.S., Johnson Controls service and installation teams are specially trained and focused on our technology offerings.

We are proud of our history, financial strength and depth and breadth of services we offer and I look forward to discussing our proposal with you and showing you why Johnson Controls is the premier leader in the electronic security industry.

I offer you my personal commitment to help ensure Johnson Controls meets your business needs.

Sincerely,

Todd Eastman, Mike Janousek and Darrin Doan
New Business Executives

Johnson Controls

This Document is Confidential

2010 Swift Dr. Oak Brook, IL 60523

The enclosed proposal for your P2P Wireless Network includes:

- Scope of work
- Schedule of Equipment
- Pricing Summary
- Maintenance and pledge of service

SCOPE OF WORK

This quote includes: Johnson Controls will design, provide, and install an outdoor 5.8 GHz wireless radio network for ALPR camera video backhaul. The wireless network will connect two street light poles back to the Glen Ellyn Police Dept. where the head end will be located. A map is provided to show the network design. The design calls for two Point to Point wireless 5.8GHz links. Each link has 400 Mbps of throughput and is scalable to 867 Mbps if needed for future village projects.

Johnson Controls will install 4 standard and 2 long range Automatic License Plate Recognition (ALPR) cameras for license plate recording on Roosevelt Road. We will mount the (4) ALPR cameras on the intersection of Baker Hill Rd / Roosevelt Rd and (2) ALPR Cameras West on Roosevelt Rd. We will utilize the existing city owned light pole infrastructure.

JCI will install ALPR camera server software on a virtual server provided by the Glen Ellyn Police Department.

Ariel View Project v.2

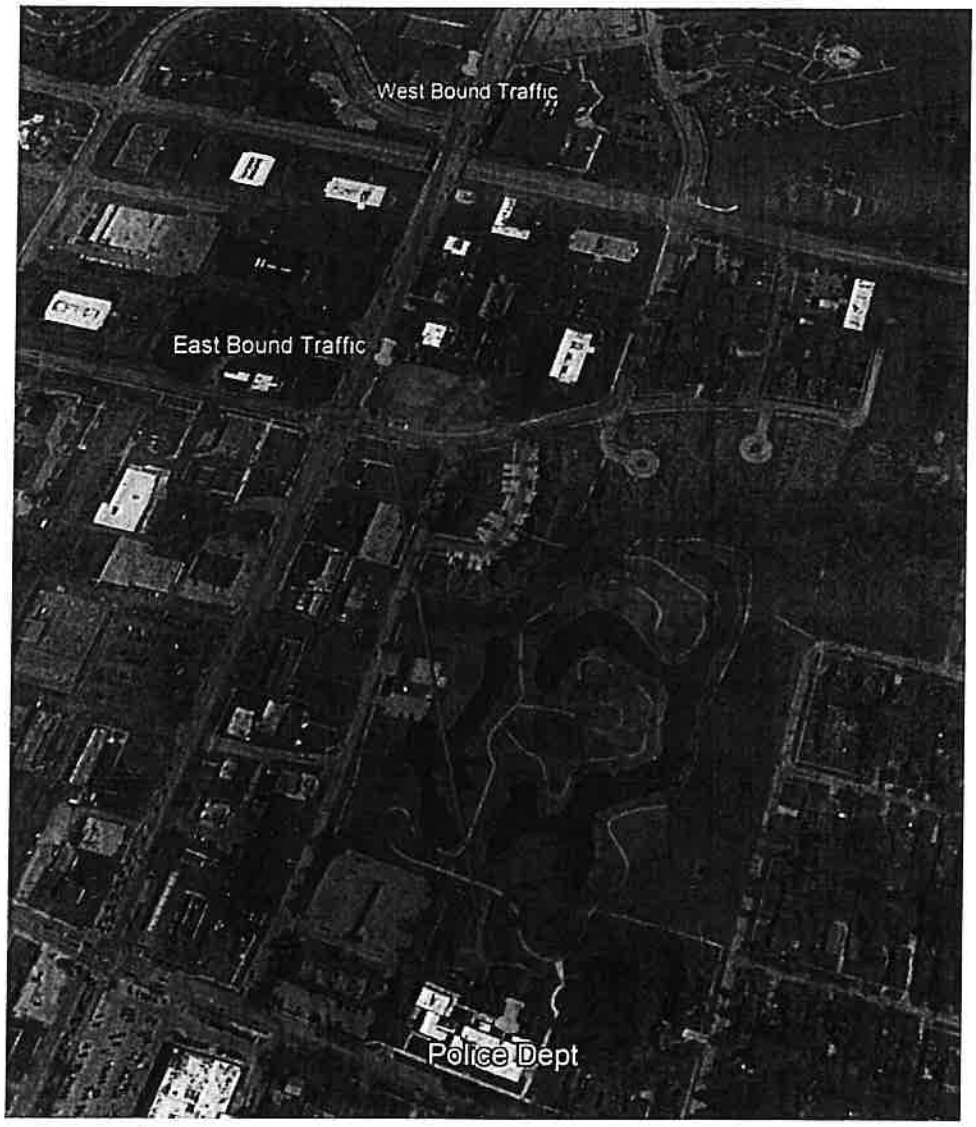

Johnson Controls

This Document is Confidential

2010 Swift Dr. Oak Brook, IL 60523

Johnson Controls (JCI) will supply all wireless materials and labor needed for the wireless network. JCI will provide and test in-house the radio equipment and to include Nema rated networking/power boxes required for the Proxim radios on the light poles. We will provide and install Outdoor CAT6 cabling, 8-port PoE hardened switch on the west bound traffic pole to support 4 cameras and a 5-port PoE hardened switch on the east bound traffic light pole to support 2 cameras, surge protectors, and network connectors in each box. All pole mounting will be included for the radios, power boxes, and surge protectors.

A JCI technician will be available to the onsite electrician to help with any question for the cabling connection of the power box to the radios at the 2 designated light poles. After the equipment is mounted and cable connected, a JCI crew will path align, turn up the wireless network, and if needed adjust the radios. A PoE network Ethernet connection will be available for future security cameras.

JCI will provide the APLR cameras and the mounts for each camera for install. Configuration and network setup for the APLR cameras will be provided.
110 AC electrical power to the poles for the Nema rated network/power box will be provided by others. Network and IP schemes needed for programming will be provided by others. JCI will program and configure all wireless equipment.

PARKING ENFORCEMENT

Johnson Controls (JCI) will supply all parking enforcement equipment which will include SecurityCenter Mapping for 5 Clients, List Updater and Pay-by-Plate Single, main processing unit, and all required software for a full functioning system. JCI will install all equipment in the designated vehicle the police department chooses.

PRICING SUMMARY

Total Proposal Price:

Installation Investment Package:	$68,952.37
Total Monthly Payment Including Preferred Services:	$ TBD /month

Server Option:

2U 4 Bay Rack mount Server Dual 200GB SSD E3-1270V6 16GB (2) 200GB SSD DPS Server.	$4,836.25

Park Enforcement Proposal Price:

Installation Investment Package:	$57,325.80
Includes 5 Year Warranty	

MAINTENANCE AND PLEDGE OF SERVICE

FULL SERVICE AND MAINTENANCE AGREEMENT

When you buy from Johnson Controls every component in your security system has been designed for dependability and ease of maintenance, but things can still go wrong.

That is why we offer a full system warranty. Should your system malfunction under normal wear and tear conditions, we will repair or replace the component at no cost to you. Johnson Controls Full Service and Maintenance Agreement assures you:

- Continued System Performance and Reliability
- Minimized Emergency Situation, Downtime and Inconvenience
- Priority Service
- No Unbudgeted, Unexpected Repair Bills

PLEDGE OF SERVICE

To provide our customer with the peace of mind that comes from knowing they have protected their businesses, homes and families with the finest security system available.

To custom-design each security system to the specific needs of our customers, using only proven, equipment of the highest quality.

To provide the superior service Johnson Controls is known for in the design, installation and round-the-clock monitoring of your system.

To put our extensive technical expertise and resources behind every system we create.

Johnson Controls
2010 Swift Dr. Oak Brook, IL 60523

MINUTEMAN™ SECURITY TECHNOLOGIES

Mobile CITY System

Prepared for

Glen Ellyn Police Department

Name: Jim Monson (630) 547-5450

Company: Glen Ellyn Police Department
65 S. Park Blvd
Glen Ellyn, IL 60137

Prepared By: Mike O'Brien, mobrien@minutemanst.com
Quote Date: 10/24/2018
Quote No: 9218
Account No: 2,861
Quote Valid To: November 23, 2018
Payment Terms: Net 30

Scope Of Work

Turnkey installation, training and 1-year support of 1-CITY system. The City system can perform long term (2-5 days) time zone enforcement. The City system can enforce permits and time zones simultaneously. Minuteman to work with your Pay by Cell and
Pay by Plate providers on set up while also configuring all your zones.

Quantity	Manufacturer	Part No.	Description	Price
Subtotal Header - Server Software				
Software below will be installed on server for Fixed LPR cameras				
1	Genetec	GSC-Av-S-PARKING	GSC AutoVuTM Standard Package For Parking Management. Includes Security Center Mapping for 5 Clients, List Updater and Pay-by-Plate Single.	$999.00
1	Genetec	GSC-PBPSYNC-UPG-MULTI	Upgrade to multiple Pay by Plate systems. No need to add SINGLE	$3,300.00
1	Genetec	ADV-LPR-M-1Y	Genetec Advantage 1 AutoVu mobile system connection to Security Center - 1 Year	$180.00
Allows for software maintenance, software upgrades for 1YRS				
Subtotal Footer 1				**$4,479.00**
Subtotal Header - Vehicle software/Hardware				
1	Genetec	AU-M-OFFLINEMAP-NA	Mapping License including data for North America - Per vehicle license	$450.00
1		AU-K-C2XS-850	AutoVu SharpX CITY dual base kit includes main processing unit, hard mount brackets, wiring, GPS, high resolution LPR units and in vehicle license	$22,750.00
Subtotal Footer 2				**$23,200.00**
Subtotal Header - MST Services				
	MST	Labor, Prog	Programming Labor - Confirgure Zones and Mapping	$900.00
	MST	Labor, Install	Installation, Configure cameras/Software/Server, Commission System and provide Training Labor	$3,770.00
Subtotal Footer 3				**$4,670.00**
Subtotal Header - OPTIONAL Extended hardware warranty for 5YRS with advanced replacement				

Quantity	Manufacturer	Part No.	Description	Price
1	Genetec	AU-K-CXX-EWAS-4Y	Extended Warranty for AU-K-CXX kit with Advance Replacement coverage - 4 Years additional coverage. Does not Include update to adv replcmnt for year 1	$13,104.00
1	Genetec	AU-K-CXX-EWUP-1Y	AU-K-CXX- advanced swap warranty service upgrade from return and repair for first year of sale.	$810.00
Subtotal Footer 4				**$13,914.00**

Item Total:	$61,625.00
Your Price:	**$46,263.00**
Total:	**$46,263.00**

Notes:

Exclusions & Assumptions

Minuteman assumes the following will be provided and/or installed by others:
110VAC as needed.
Minuteman assumes all work will be completed during normal business hours of Monday - Friday 7:00AM - 5:00PM.
Customer Supplied Internet Connection:
A high-speed internet connection with a static IP address must be provided by the customer at the head-end location for remote access.
Customer Supplied LAN Connection:
A network connection must be provided at each specified location. An IP address may also be required. Details will be provided.
Freight:
Standard shipping charges, if applicable, will be included in the final invoice.
Infectious Disease Control Measures
This project contains measures for Infectious Disease Control.
Note:
The placement of security devices in the elevator cars requires co-operation with the building's elevator company. The cost of all elevator company interface wiring is the responsibility of the customer.

Payment Terms: [Net30]
Progress Payments Per AIA Form Will Be Submitted
Final Payment due upon completion of project

Accepted By: ***(Please type or print except where otherwise indicated.)***

Firm Name: _____

Authorized Signature: _____

Printed Name, Title: _____

Date: _____

Terms and Conditions:

OPERATION: Customer shall be responsible for: (i)properly testing and setting the system on every closing and to properly turn off the system on each opening (if applicable); (ii) testing any detection device, or other electronic equipment designated in the Proposal prior to setting the System for closed periods; (iii) notifying Minuteman promptly if such equipment fails to respond to the test; and (iv) using and operating the System and the equipment properly and in accordance with proper operating procedures (if customer requires Minuteman Security Technologies). Whenever Minuteman employees or authorized representatives are sent to the Covered Premises in response to a service call or alarm signal caused by the Customer improperly following operating instructions or failing to close or properly secure a protected point, Customer agrees to pay an additional service charge at Minuteman's prevailing rate per occurrence.

DELAYS - INTERRUPTION OF SERVICE: Minuteman shall not be liable for any delays, however caused, or for interruptions of service caused by strikes, riots, floods, acts of God, loss of communication and or other signal transmission lines, or by any event beyond the control of Minuteman. Minuteman will not be required to furnish service to Customer while such interruption shall continue.

EXCLUSIONS: Services to be provided by Minuteman pursuant to this Agreement do not include:

a) Repair of damage or increase in service time caused by failure to continually provide a suitable operating environment for the System as prescribed by Minuteman and/or the manufacturer of any equipment used in the System, including, but not limited to, the failure to provide, or the failure of, adequate and regulated electrical power, air conditioning or humidity control; or such special requirements as contained in the Proposal hereto.

b) Repair of damage or increase in service time caused by use of the equipment for other than the ordinary use for which the equipment was designed or purpose for which it was intended.

c) Repair of damage, replacement parts (due to other than normal wear) or repetitive service calls caused by the use of unauthorized supplies or equipment.

d) Repair of damage or increase in service time caused by: accident, disaster, which shall include, but not be limited to, fire, flood, water, wind and lightning; transportation, neglect or misuse, alterations, which shall include, but not be limited to, any deviation from Minuteman's physical, mechanical or electrical machine design; attachments, which are defined as the mechanical, electrical or electronic interconnecting to non-Minuteman equipment and devices not supplied by Minuteman.

e) Electrical work external to the equipment or accessories furnished by Minuteman.

ADDITIONAL CHARGES: Unless otherwise specified in the Proposal, service charges for the system are based upon coverage during "normal business hours of operation." Service performed outside this window, or as a result of the failure of the Customer to adhere to the requirements as specified by either the manufacturer or outside the scope of the Agreement, shall be chargeable at Minuteman's prevailing rates. Customer shall not tamper with, adjust, alter, move, remove, or otherwise interfere with equipment without Minuteman's specific permission, nor permit the same by other contractors. Any work performed by Minuteman to correct Customer's breach of the foregoing obligation shall be corrected and paid for by Customer at Minuteman's prevailing rates. Remedial maintenance due to Acts of God or events beyond the control of Minuteman shall be corrected by Minuteman and paid for by Customer in accordance with Minuteman's prevailing rates.
Minuteman shall have the right to increase or decrease the periodic service charge provided above at any time or times after the expiration of one year from the date service is operative under this Agreement, upon giving Customer written notice thirty (30) days in advance of the effective date of such increase or decrease.

LIQUIDATED DAMAGES -MINUTEMAN'S LIMITS OF LIABILITY: Customer understands that Minuteman is not an insurer; that Customer is responsible for obtaining insurance for such reasons or purposes, including theft and vandalism, and in such amounts, as Customer shall determine. Customer further understands and agrees that the sums payable hereunder to Minuteman are based upon the value of services offered and equipment value provided and such sums are not related to the value of property belonging to Customer or to others located on the Covered Premises. Customer does not and shall not seek indemnity under this Agreement from Minuteman, and specifically waives any rights for indemnity for any damages or losses caused by hazards to customers, invitees, guests, or property of customer or third parties. Customer understands and agrees that the System and the services to be supplied hereunder are designed to detect security breaches, and that MINUTEMAN MAKES NO WARRANTY, EXPRESS OR IMPLIED, THAT THE SYSTEM OR THE SERVICES IT FURNISHES WILL AVERT OR PREVENT OCCURRENCES, OR THE CONSEQUENCES THEREFROM. Customer agrees that Minuteman shall not be liable to Customer, its employees, agents or guests, or to any third party, for any losses or damages, irrespective of origin, to person or property, whether directly or indirectly caused by performance or non-performance of obligations imposed upon Minuteman under this Agreement or by negligent acts or omissions of Minuteman, its agents or employees. In all events, it is further agreed that if Minuteman should become liable for any losses or damages for any reason having to do with this Agreement, Minuteman's total liability to Customer shall be limited $250., which sum the Customer agrees is reasonable. The payment of this amount shall be Minuteman's sole and exclusive liability regardless of the amount of loss or damage incurred by the Customer.

Indemnification:
Each party shall indemnify and hold harmless the other, their trustees, officers, professional staff, employees and agents from and against any loss, damage, claim or liability, including reasonable attorneys' fees (collectively "liabilities"), arising out of the performance of this Agreement to the extent that such liabilities arise from the acts or omissions, negligence, gross or reckless misconduct, or intentional wrongdoing of the indemnifying party, its trustees, officers, professional staff, employees or agents.

Minuteman Security Technologies, Inc Full One Year Limited Warranty:
What is Covered:

This warranty covers any defects in materials or workmanship, including installation, with the exceptions stated below.

How Long Coverage Lasts:

This warranty runs for one year from the date your system was installed and accepted.

What is not covered:

This warranty does not cover intentional or un-intentional misuse or of any of the system components or software. The warranty does not cover damage as a result of acts of god (lighting, floods, storms, etc...) or electric surge.

What Minuteman Will Do:
Minuteman will repair any part of the system that is proved to be defective in materials or workmanship. In the event repair is not possible on certain system components, Minuteman will replace said component with similar specification and price.

How To Get Service:

Contact our service department at your nearest service center. A service representative will review your system and take any necessary action to correct problems covered by this warranty.

How State Law Applies:

This warranty gives you specific legal rights, and you may also have other rights which vary from state to state.

MINUTEMAN™ SECURITY TECHNOLOGIES

Mobile CITY System

Prepared for

Glen Ellyn Police Department

Name: Jim Monson (630) 547-5450

Company: Glen Ellyn Police Department
65 S. Park Blvd
Glen Ellyn, IL 60137

Prepared By: Mike O'Brien, mobrien@minutemanst.com
Quote Date: 10/24/2018
Quote No: 9218
Account No: 2,861
Quote Valid To: December 31, 2018
Payment Terms: Net 30

Scope Of Work

Turnkey installation, training and 1-year support of 1-CITY system. The City system can perform long term (2-5 days) time zone enforcement. The City system can enforce permits and time zones simultaneously. Minuteman to work with your Pay by Cell and
Pay by Plate providers on set up while also configuring all your zones.

Quantity	Manufacturer	Part No.	Description	Price
Subtotal Header - Server Software				
Software below will be installed on server for Fixed LPR cameras				
1	Genetec	GSC-Av-S-PARKING	GSC AutoVuTM Standard Package For Parking Management. Includes Security Center Mapping for 5 Clients, List Updater and Pay-by-Plate Single.	$999.00
1	Genetec	GSC-PBPSYNC-UPG-MULTI	Upgrade to multiple Pay by Plate systems. No need to add SINGLE	$3,300.00
1	Genetec	ADV-LPR-M-5Y	Genetec™ Advantage for 1 AutoVu mobile system connection to Security Center - 5 Years	$700.00
Allows for software maintenance, software upgrades for 1YRS				
Subtotal Footer 1				**$4,999.00**
Subtotal Header - Vehicle software/Hardware				
1	Genetec	AU-M-OFFLINEMAP-NA	Mapping License including data for North America - Per vehicle license	$450.00
1		AU-K-C2XS-850	AutoVu SharpX CITY dual base kit includes main processing unit, hard mount brackets, wiring, GPS, high resolution LPR units and in vehicle license	$22,750.00
Subtotal Footer 2				**$23,200.00**
Subtotal Header - MST Services				
	MST	Labor, Prog	Programming Labor - Confirgure Zones and Mapping	$900.00
	MST	Labor, Install	Installation, Configure cameras/Software/Server, Commission System and provide Training Labor	$3,770.00
Subtotal Footer 3				**$4,670.00**
Subtotal Header - OPTIONAL Extended hardware warranty for 5YRS with advanced replacement				

Quantity	Manufacturer	Part No.	Description	Price
1	Genetec	AU-K-CXX-EWAS-4Y	Extended Warranty for AU-K-CXX kit with Advance Replacement coverage - 4 Years additional coverage. Does not Include update to adv replcmnt for year 1	$13,104.00
1	Genetec	AU-K-CXX-EWUP-1Y	AU-K-CXX- advanced swap warranty service upgrade from return and repair for first year of sale.	$810.00
Subtotal Footer 4				**$13,914.00**

Item Total:	$62,125.00
Your Price:	**$46,783.00**
Total:	**$46,783.00**

Notes:

Exclusions & Assumptions

Minuteman assumes the following will be provided and/or installed by others:
110VAC as needed.
Minuteman assumes all work will be completed during normal business hours of Monday - Friday 7:00AM - 5:00PM.
Customer Supplied Internet Connection:
A high-speed internet connection with a static IP address must be provided by the customer at the head-end location for remote access.
Customer Supplied LAN Connection:
A network connection must be provided at each specified location. An IP address may also be required. Details will be provided.
Freight:
Standard shipping charges, if applicable, will be included in the final invoice.
Infectious Disease Control Measures
This project contains measures for Infectious Disease Control.
Note:
The placement of security devices in the elevator cars requires co-operation with the building's elevator company. The cost of all elevator company interface wiring is the responsibility of the customer.

Payment Terms: [Net30]
Progress Payments Per AIA Form Will Be Submitted
Final Payment due upon completion of project

Accepted By: ***(Please type or print except where otherwise indicated.)***

Firm Name: _____

Authorized Signature: _____

Printed Name, Title: _____

Date: _____

Terms and Conditions:

OPERATION: Customer shall be responsible for: (i)properly testing and setting the system on every closing and to properly turn off the system on each opening (if applicable); (ii) testing any detection device, or other electronic equipment designated in the Proposal prior to setting the System for closed periods; (iii) notifying Minuteman promptly if such equipment fails to respond to the test; and (iv) using and operating the System and the equipment properly and in accordance with proper operating procedures (if customer requires Minuteman Security Technologies). Whenever Minuteman employees or authorized representatives are sent to the Covered Premises in response to a service call or alarm signal caused by the Customer improperly following operating instructions or failing to close or properly secure a protected point, Customer agrees to pay an additional service charge at Minuteman's prevailing rate per occurrence.

DELAYS - INTERRUPTION OF SERVICE: Minuteman shall not be liable for any delays, however caused, or for interruptions of service caused by strikes, riots, floods, acts of God, loss of communication and or other signal transmission lines, or by any event beyond the control of Minuteman. Minuteman will not be required to furnish service to Customer while such interruption shall continue.

EXCLUSIONS: Services to be provided by Minuteman pursuant to this Agreement do not include:

a) Repair of damage or increase in service time caused by failure to continually provide a suitable operating environment for the System as prescribed by Minuteman and/or the manufacturer of any equipment used in the System, including, but not limited to, the failure to provide, or the failure of, adequate and regulated electrical power, air conditioning or humidity control; or such special requirements as contained in the Proposal hereto.

b) Repair of damage or increase in service time caused by use of the equipment for other than the ordinary use for which the equipment was designed or purpose for which it was intended.

c) Repair of damage, replacement parts (due to other than normal wear) or repetitive service calls caused by the use of unauthorized supplies or equipment.

d) Repair of damage or increase in service time caused by: accident, disaster, which shall include, but not be limited to, fire, flood, water, wind and lightning; transportation, neglect or misuse, alterations, which shall include, but not be limited to, any deviation from Minuteman's physical, mechanical or electrical machine design; attachments, which are defined as the mechanical, electrical or electronic interconnecting to non-Minuteman equipment and devices not supplied by Minuteman.

e) Electrical work external to the equipment or accessories furnished by Minuteman.

ADDITIONAL CHARGES: Unless otherwise specified in the Proposal, service charges for the system are based upon coverage during "normal business hours of operation." Service performed outside this window, or as a result of the failure of the Customer to adhere to the requirements as specified by either the manufacturer or outside the scope of the Agreement, shall be chargeable at Minuteman's prevailing rates. Customer shall not tamper with, adjust, alter, move, remove, or otherwise interfere with equipment without Minuteman's specific permission, nor permit the same by other contractors. Any work performed by Minuteman to correct Customer's breach of the foregoing obligation shall be corrected and paid for by Customer at Minuteman's prevailing rates. Remedial maintenance due to Acts of God or events beyond the control of Minuteman shall be corrected by Minuteman and paid for by Customer in accordance with Minuteman's prevailing rates.
Minuteman shall have the right to increase or decrease the periodic service charge provided above at any time or times after the expiration of one year from the date service is operative under this Agreement, upon giving Customer written notice thirty (30) days in advance of the effective date of such increase or decrease.

LIQUIDATED DAMAGES -MINUTEMAN'S LIMITS OF LIABILITY: Customer understands that Minuteman is not an insurer; that Customer is responsible for obtaining insurance for such reasons or purposes, including theft and vandalism, and in such amounts, as Customer shall determine. Customer further understands and agrees that the sums payable hereunder to Minuteman are based upon the value of services offered and equipment value provided and such sums are not related to the value of property belonging to Customer or to others located on the Covered Premises. Customer does not and shall not seek indemnity under this Agreement from Minuteman, and specifically waives any rights for indemnity for any damages or losses caused by hazards to customers, invitees, guests, or property of customer or third parties. Customer understands and agrees that the System and the services to be supplied hereunder are designed to detect security breaches, and that MINUTEMAN MAKES NO WARRANTY, EXPRESS OR IMPLIED, THAT THE SYSTEM OR THE SERVICES IT FURNISHES WILL AVERT OR PREVENT OCCURRENCES, OR THE CONSEQUENCES THEREFROM. Customer agrees that Minuteman shall not be liable to Customer, its employees, agents or guests, or to any third party, for any losses or damages, irrespective of origin, to person or property, whether directly or indirectly caused by performance or non-performance of obligations imposed upon Minuteman under this Agreement or by negligent acts or omissions of Minuteman, its agents or employees. In all events, it is further agreed that if Minuteman should become liable for any losses or damages for any reason having to do with this Agreement, Minuteman's total liability to Customer shall be limited $250., which sum the Customer agrees is reasonable. The payment of this amount shall be Minuteman's sole and exclusive liability regardless of the amount of loss or damage incurred by the Customer.

Indemnification:
Each party shall indemnify and hold harmless the other, their trustees, officers, professional staff, employees and agents from and against any loss, damage, claim or liability, including reasonable attorneys' fees (collectively "liabilities"), arising out of the performance of this Agreement to the extent that such liabilities arise from the acts or omissions, negligence, gross or reckless misconduct, or intentional wrongdoing of the indemnifying party, its trustees, officers, professional staff, employees or agents.

Minuteman Security Technologies, Inc Full One Year Limited Warranty:
What is Covered:

This warranty covers any defects in materials or workmanship, including installation, with the exceptions stated below.

How Long Coverage Lasts:

This warranty runs for one year from the date your system was installed and accepted.

What is not covered:

This warranty does not cover intentional or un-intentional misuse or of any of the system components or software. The warranty does not cover damage as a result of acts of god (lighting, floods, storms, etc...) or electric surge.

What Minuteman Will Do:
Minuteman will repair any part of the system that is proved to be defective in materials or workmanship. In the event repair is not possible on certain system components, Minuteman will replace said component with similar specification and price.

How To Get Service:

Contact our service department at your nearest service center. A service representative will review your system and take any necessary action to correct problems covered by this warranty.

How State Law Applies:

This warranty gives you specific legal rights, and you may also have other rights which vary from state to state.

MINUTEMAN™ SECURITY TECHNOLOGIES

Fixed LPR Baker Hill Dr

Prepared for

Glen Ellyn Police Department

Name: Jim Monson (630) 547-5450

Company: Glen Ellyn Police Department
65 S. Park Blvd
Glen Ellyn, IL 60137

Prepared By: Mike O'Brien, mobrien@minutemanst.com
Quote Date: 8/3/2018
Quote No: 8540
Account No: 2,861
Quote Valid To: October 31, 2018
Payment Terms: Net 30

Scope Of Work

MST to install 4-LPR cameras on the traffic arm's of Roosevelt Rd at the Baker Hill Dr. intersection. 2-cameras West bound and 2-cameras East bound.

These cameras are to mounted on city owned street light poles that have 24/7/365 power. MST to wirelessly stream data across the street and back haul the LPR data to the roof of the PD. MST to install one non-pentetratiing roof mount on the roof with another radio to aggregate data. This is temporary. Following the installation of the wireless network in PH2, MST will reposition the non-pen to aggregate data from the water tower and replace the temporary radio with the new sector antenna as called for in PH2.

Our intent is to use two cameras to capture the three lanes of traffic as best as possible or on a pole where the lanes are choked down to two. Need to further evaluate based on the pole selection in the field. MST to supply the Nema enclosures and LPR cameras in Black for pole aesthetics

Quantity	Manufacturer	Part No.	Description	Price
Subtotal Header 1 - Server software				
	We sized the server to accomodate the LPR and doubled your PH1/PH2 cameras from 12 to 24 at 4MP each, 30 day retention streaming at 15fps			
1	Panasonic	NVR-R-1-1-18TB-A	DELL R330 Server 2012, 18TB storage w/11TB usable, 1U, 4GB RAM	$7,765.00
1		GSC-5.7	Software Version	$0.00
1	Genetec	GSC-AV-S	GSC AUTOVU STANDARD BASE PKG	$1,420.25
4	Genetec	GSC-Av-S-1SHP	One (1) fixed Sharp camera connection (one (1) connection is required for each analyzed stream)	$1,710.00
Subtotal Footer 1				**$10,895.25**
Subtotal Header 2 - LPR Installation Hardware				
2	MST	IPCAMEN4-PWR	Nema enclosure w/lightning protection, power supply & network switch. Built with temperature hardened components	$2,200.00
4	Genetec	AU-K-V-BS850-LC	Black AutoVu SharpV Camera Kit which includes: SharpV Standard Range Dual (LPR and Context) lens and 850nm illuminator, mounting bracket and Sharp Ca	$21,660.00
3	Tycon Power	FS-TP-POE-1824G	48V 802.3AF/AT GIGABIT POE IN, 18/24VDC 24W GIGABIT PASSIVE POE OUT POE INSERTER	$301.95

Quantity	Manufacturer	Part No.	Description	Price
3	Anixter	C058900P072A	Cambium -EPMP Force 180 4.9-5.9GHz Radio	$540.00
3	Federal Signal	FS-AMB-P	Custom Offset Pole Mounts	$285.00
Subtotal Footer 2				**$24,986.95**
Subtotal Header 3 - PD Rooftop				
1	Winncom Technologies	CPRB1.5/2AT12	Harger - 1.9"x2.375" OD Pipe Base Air Term Mount	$44.46
1	Winncom Technologies	1224CUAT	Harger - 1/2"x24" Air Term	$32.26
1	Anixter	JRM27555HC	ROHN, NPRM, 120" split mast, 62" Base	$473.85
1	Anixter	JRMPAD	ROHN - Roof Pads, JRM NPRM	$187.38
2	Anixter	C000000L033A	Cambium - Gigait Ethernet Surge Suppressor	$123.08
1	Anixter	C058900P072A	Cambium -EPMP Force 180 4.9-5.9GHz Radio	$180.00
300	Windy City Wire	CAT6-OUTDOOR SHIELDED	24-4P Shielded CAT6 Cable	$120.45
1.00	MST	MISC-IL	Miscellaneous Materials-Cinder Blocks ect...	$130.00
Subtotal Footer 3				**$1,291.48**
Subtotal Header 4 - MST Services				
	MST	Labor, Prog	Programming Labor, Build enclosure, configure cameras, software and commission system	$1,800.00
	MST	Labor, Install	Installation Labor	$4,550.00
	MST	Labor, Training	Training Labor	$600.00
	MST	Labor, PM	Project Management Labor	$450.00
2.00	MST	Lift-40' Boom	2 Day 40' Boom	$1,160.00
	Should cones not be sufficient and traffic control be required, we would ask for support from PD			
Subtotal Footer 4				**$8,560.00**
1.00	MST	Shipping-IL	Shipping Charges	$230.00

Item Total:	$47,268.43
Your Price:	**$45,963.68**
Total:	**$45,963.68**

Notes:

Exclusions & Assumptions

Minuteman assumes the following will be provided and/or installed by others:
110VAC as needed provided by PD.
Minuteman assumes all work will be completed during normal business hours of Monday - Friday 7:00AM - 5:00PM.
Customer Supplied Internet Connection:
A high-speed internet connection with a static IP address must be provided by the customer at the head-end location for remote access.
Customer Supplied LAN Connection:
A network connection must be provided at each specified location. An IP address may also be required. Details will be provided.

Payment Terms: [Net30]
Progress Payments Per AIA Form Will Be Submitted
Final Payment due upon completion of project

Accepted By: ***(Please type or print except where otherwise indicated.)***

Firm Name: _____

Authorized Signature: _____

Printed Name, Title: _____

Date: _____

Terms and Conditions:

OPERATION: Customer shall be responsible for: (i)properly testing and setting the system on every closing and to properly turn off the system on each opening (if applicable); (ii) testing any detection device, or other electronic equipment designated in the Proposal prior to setting the System for closed periods; (iii) notifying Minuteman promptly if such equipment fails to respond to the test; and (iv) using and operating the System and the equipment properly and in accordance with proper operating procedures (if customer requires Minuteman Security Technologies). Whenever Minuteman employees or authorized representatives are sent to the Covered Premises in response to a service call or alarm signal caused by the Customer improperly following operating instructions or failing to close or properly secure a protected point, Customer agrees to pay an additional service charge at Minuteman's prevailing rate per occurrence.

DELAYS - INTERRUPTION OF SERVICE: Minuteman shall not be liable for any delays, however caused, or for interruptions of service caused by strikes, riots, floods, acts of God, loss of communication and or other signal transmission lines, or by any event beyond the control of Minuteman. Minuteman will not be required to furnish service to Customer while such interruption shall continue.

EXCLUSIONS: Services to be provided by Minuteman pursuant to this Agreement do not include:

a) Repair of damage or increase in service time caused by failure to continually provide a suitable operating environment for the System as prescribed by Minuteman and/or the manufacturer of any equipment used in the System, including, but not limited to, the failure to provide, or the failure of, adequate and regulated electrical power, air conditioning or humidity control; or such special requirements as contained in the Proposal hereto.

b) Repair of damage or increase in service time caused by use of the equipment for other than the ordinary use for which the equipment was designed or purpose for which it was intended.

c) Repair of damage, replacement parts (due to other than normal wear) or repetitive service calls caused by the use of unauthorized supplies or equipment.

d) Repair of damage or increase in service time caused by: accident, disaster, which shall include, but not be limited to, fire, flood, water, wind and lightning; transportation, neglect or misuse, alterations, which shall include, but not be limited to, any deviation from Minuteman's physical, mechanical or electrical machine design; attachments, which are defined as the mechanical, electrical or electronic interconnecting to non-Minuteman equipment and devices not supplied by Minuteman.

e) Electrical work external to the equipment or accessories furnished by Minuteman.

ADDITIONAL CHARGES: Unless otherwise specified in the Proposal, service charges for the system are based upon coverage during "normal business hours of operation." Service performed outside this window, or as a result of the failure of the Customer to adhere to the requirements as specified by either the manufacturer or outside the scope of the Agreement, shall be chargeable at Minuteman's prevailing rates. Customer shall not tamper with, adjust, alter, move, remove, or otherwise interfere with equipment without Minuteman's specific permission, nor permit the same by other contractors. Any work performed by Minuteman to correct Customer's breach of the foregoing obligation shall be corrected and paid for by Customer at Minuteman's prevailing rates. Remedial maintenance due to Acts of God or events beyond the control of Minuteman shall be corrected by Minuteman and paid for by Customer in accordance with Minuteman's prevailing rates.
Minuteman shall have the right to increase or decrease the periodic service charge provided above at any time or times after the expiration of one year from the date service is operative under this Agreement, upon giving Customer written notice thirty (30) days in advance of the effective date of such increase or decrease.

LIQUIDATED DAMAGES -MINUTEMAN'S LIMITS OF LIABILITY: Customer understands that Minuteman is not an insurer; that Customer is responsible for obtaining insurance for such reasons or purposes, including theft and vandalism, and in such amounts, as Customer shall determine. Customer further understands and agrees that the sums payable hereunder to Minuteman are based upon the value of services offered and equipment value provided and such sums are not related to the value of property belonging to Customer or to others located on the Covered Premises. Customer does not and shall not seek indemnity under this Agreement from Minuteman, and specifically waives any rights for indemnity for any damages or losses caused by hazards to customers, invitees, guests, or property of customer or third parties. Customer understands and agrees that the System and the services to be supplied hereunder are designed to detect security breaches, and that MINUTEMAN MAKES NO WARRANTY, EXPRESS OR IMPLIED, THAT THE SYSTEM OR THE SERVICES IT FURNISHES WILL AVERT OR PREVENT OCCURRENCES, OR THE CONSEQUENCES THEREFROM. Customer agrees that Minuteman shall not be liable to Customer, its employees, agents or guests, or to any third party, for any losses or damages, irrespective of origin, to person or property, whether directly or indirectly caused by performance or non-performance of obligations imposed upon Minuteman under this Agreement or by negligent acts or omissions of Minuteman, its agents or employees. In all events, it is further agreed that if Minuteman should become liable for any losses or damages for any reason having to do with this Agreement, Minuteman's total liability to Customer shall be limited $250., which sum the Customer agrees is reasonable. The payment of this amount shall be Minuteman's sole and exclusive liability regardless of the amount of loss or damage incurred by the Customer.

Indemnification:
Each party shall indemnify and hold harmless the other, their trustees, officers, professional staff, employees and agents from and against any loss, damage, claim or liability, including reasonable attorneys' fees (collectively "liabilities"), arising out of the performance of this Agreement to the extent that such liabilities arise from the acts or omissions, negligence, gross or reckless misconduct, or intentional wrongdoing of the indemnifying party, its trustees, officers, professional staff, employees or agents.

Minuteman Security Technologies, Inc Full One Year Limited Warranty:
What is Covered:

This warranty covers any defects in materials or workmanship, including installation, with the exceptions stated below.

How Long Coverage Lasts:

This warranty runs for one year from the date your system was installed and accepted.

What is not covered:

This warranty does not cover intentional or un-intentional misuse or of any of the system components or software. The warranty does not cover damage as a result of acts of god (lighting, floods, storms, etc...) or electric surge.

What Minuteman Will Do:
Minuteman will repair any part of the system that is proved to be defective in materials or workmanship. In the event repair is not possible on certain system components, Minuteman will replace said component with similar specification and price.

How To Get Service:

Contact our service department at your nearest service center. A service representative will review your system and take any necessary action to correct problems covered by this warranty.

How State Law Applies:

This warranty gives you specific legal rights, and you may also have other rights which vary from state to state.

MINUTEMAN™ SECURITY TECHNOLOGIES

Fixed LPR Baker Hill Dr

Prepared for

Glen Ellyn Police Department

Name: Jim Monson (630) 547-5450

Company: Glen Ellyn Police Department
65 S. Park Blvd
Glen Ellyn, IL 60137

Prepared By: Mike O'Brien, mobrien@minutemanst.com
Quote Date: 8/3/2018
Quote No: 8540
Account No: 2,861
Quote Valid To: December 31, 2018
Payment Terms: Net 30

Scope Of Work

MST to install 4-LPR cameras on the traffic arm's of Roosevelt Rd at the Baker Hill Dr. intersection. 2-cameras West bound and 2-cameras East bound.

These cameras are to mounted on city owned street light poles that have 24/7/365 power. MST to wirelessly stream data across the street and back haul the LPR data to the roof of the PD. MST to install one non-pentetratiing roof mount on the roof with another radio to aggregate data. This is temporary. Following the installation of the wireless network in PH2, MST will reposition the non-pen to aggregate data from the water tower and replace the temporary radio with the new sector antenna as called for in PH2.

Our intent is to use two cameras to capture the three lanes of traffic as best as possible or on a pole where the lanes are choked down to two. Need to further evaluate based on the pole selection in the field. MST to supply the Nema enclosures and LPR cameras in Black for pole aesthetics

Quantity	Manufacturer	Part No.	Description	Price
Subtotal Header 1 - Server software				
Server B/O and assumed to meet Genetec's minimum requirements				
1		GSC-5.7	Software Version	$0.00
1	Genetec	GSC-AV-S	GSC AUTOVU STANDARD BASE PKG	$1,420.25
4	Genetec	ADV-LPR-F-5Y	Genetec™ Advantage for 1 AutoVu fixed camera connection - 5 Years	$1,120.00
4	Genetec	GSC-Av-S-1SHP	One (1) fixed Sharp camera connection (one (1) connection is required for each analyzed stream)	$1,710.00
Subtotal Footer 1				**$4,250.25**
Subtotal Header 2 - LPR Installation Hardware				
2	MST	IPCAMEN4-PWR	Nema enclosure w/lightning protection, power supply & network switch. Built with temperature hardened components	$2,200.00
4	Genetec	AU-K-V-BS850-LC	Black AutoVu SharpV Camera Kit which includes: SharpV Standard Range Dual (LPR and Context) lens and 850nm illuminator, mounting bracket and Sharp Ca	$21,660.00
3	Tycon Power	FS-TP-POE-1824G	48V 802.3AF/AT GIGABIT POE IN, 18/24VDC 24W GIGABIT PASSIVE POE OUT POE INSERTER	$301.95
3	Anixter	C058900P072A	Cambium -EPMP Force 180 4.9-5.9GHz Radio	$540.00

Quantity	Manufacturer	Part No.	Description	Price
3	Federal Signal	FS-AMB-P	Custom Offset Pole Mounts	$285.00
Subtotal Footer 2				**$24,986.95**
Subtotal Header 3 - PD Rooftop				
1	Winncom Technologies	CPRB1.5/2AT12	Harger - 1.9"x2.375" OD Pipe Base Air Term Mount	$44.46
1	Winncom Technologies	1224CUAT	Harger - 1/2"x24" Air Term	$32.26
1	Anixter	JRM27555HC	ROHN, NPRM, 120" split mast, 62" Base	$473.85
1	Anixter	JRMPAD	ROHN - Roof Pads, JRM NPRM	$187.38
2	Anixter	C000000L033A	Cambium - Gigait Ethernet Surge Suppressor	$123.08
1	Anixter	C058900P072A	Cambium -EPMP Force 180 4.9-5.9GHz Radio	$180.00
300	Windy City Wire	CAT6-OUTDOOR SHIELDED	24-4P Shielded CAT6 Cable	$120.45
1.00	MST	MISC-IL	Miscellaneous Materials-Cinder Blocks ect...	$130.00
Subtotal Footer 3				**$1,291.48**
Subtotal Header 4 - MST Services				
	MST	Labor, Prog	Programming Labor, Build enclosure, configure cameras, software and commission system	$1,800.00
	MST	Labor, Install	Installation Labor	$4,550.00
	MST	Labor, Training	Training Labor	$600.00
	MST	Labor, PM	Project Management Labor	$450.00
2.00	MST	Lift-40' Boom	2 Day 40' Boom	$1,160.00
	Should cones not be sufficient and traffic control be required, we would ask for support from PD			
Subtotal Footer 4				**$8,560.00**
Subtotal Header 5 - OPTIONAL EXTENDED HARDWARE WARRANTY				
4	Genetec	AU-V-EWUP-1Y	Warranty Upgrade for SharpV from Return and Repair to Advanced Replacement coverage - 1st Year	$1,000.00
4	Genetec	AU-V-EWAS-4Y	Extended Warranty for SharpV with Advance Replacement coverage - 4 Years additional coverage. Does not Include update to advanced replacement for year	$7,640.00
Subtotal Footer 5				**$8,640.00**
1.00	MST	Shipping-IL	Shipping Charges	$230.00

Item Total:	$49,263.43
Your Price:	**$47,958.68**
Total:	**$47,958.68**

Notes:

Exclusions & Assumptions

Minuteman assumes the following will be provided and/or installed by others:
110VAC as needed provided by PD.
Minuteman assumes all work will be completed during normal business hours of Monday - Friday 7:00AM - 5:00PM.
Customer Supplied Internet Connection:
A high-speed internet connection with a static IP address must be provided by the customer at the head-end location for remote access.
Customer Supplied LAN Connection:
A network connection must be provided at each specified location. An IP address may also be required. Details will be provided.

Payment Terms: [Net30]
Progress Payments Per AIA Form Will Be Submitted
Final Payment due upon completion of project

Accepted By: ***(Please type or print except where otherwise indicated.)***

Firm Name: _____

Authorized Signature: _____

Printed Name, Title: _____

Date: _____

Terms and Conditions:

OPERATION: Customer shall be responsible for: (i)properly testing and setting the system on every closing and to properly turn off the system on each opening (if applicable); (ii) testing any detection device, or other electronic equipment designated in the Proposal prior to setting the System for closed periods; (iii) notifying Minuteman promptly if such equipment fails to respond to the test; and (iv) using and operating the System and the equipment properly and in accordance with proper operating procedures (if customer requires Minuteman Security Technologies). Whenever Minuteman employees or authorized representatives are sent to the Covered Premises in response to a service call or alarm signal caused by the Customer improperly following operating instructions or failing to close or properly secure a protected point, Customer agrees to pay an additional service charge at Minuteman's prevailing rate per occurrence.

DELAYS - INTERRUPTION OF SERVICE: Minuteman shall not be liable for any delays, however caused, or for interruptions of service caused by strikes, riots, floods, acts of God, loss of communication and or other signal transmission lines, or by any event beyond the control of Minuteman. Minuteman will not be required to furnish service to Customer while such interruption shall continue.

EXCLUSIONS: Services to be provided by Minuteman pursuant to this Agreement do not include:

a) Repair of damage or increase in service time caused by failure to continually provide a suitable operating environment for the System as prescribed by Minuteman and/or the manufacturer of any equipment used in the System, including, but not limited to, the failure to provide, or the failure of, adequate and regulated electrical power, air conditioning or humidity control; or such special requirements as contained in the Proposal hereto.

b) Repair of damage or increase in service time caused by use of the equipment for other than the ordinary use for which the equipment was designed or purpose for which it was intended.

c) Repair of damage, replacement parts (due to other than normal wear) or repetitive service calls caused by the use of unauthorized supplies or equipment.

d) Repair of damage or increase in service time caused by: accident, disaster, which shall include, but not be limited to, fire, flood, water, wind and lightning; transportation, neglect or misuse, alterations, which shall include, but not be limited to, any deviation from Minuteman's physical, mechanical or electrical machine design; attachments, which are defined as the mechanical, electrical or electronic interconnecting to non-Minuteman equipment and devices not supplied by Minuteman.

e) Electrical work external to the equipment or accessories furnished by Minuteman.

ADDITIONAL CHARGES: Unless otherwise specified in the Proposal, service charges for the system are based upon coverage during "normal business hours of operation." Service performed outside this window, or as a result of the failure of the Customer to adhere to the requirements as specified by either the manufacturer or outside the scope of the Agreement, shall be chargeable at Minuteman's prevailing rates. Customer shall not tamper with, adjust, alter, move, remove, or otherwise interfere with equipment without Minuteman's specific permission, nor permit the same by other contractors. Any work performed by Minuteman to correct Customer's breach of the foregoing obligation shall be corrected and paid for by Customer at Minuteman's prevailing rates. Remedial maintenance due to Acts of God or events beyond the control of Minuteman shall be corrected by Minuteman and paid for by Customer in accordance with Minuteman's prevailing rates.
Minuteman shall have the right to increase or decrease the periodic service charge provided above at any time or times after the expiration of one year from the date service is operative under this Agreement, upon giving Customer written notice thirty (30) days in advance of the effective date of such increase or decrease.

LIQUIDATED DAMAGES -MINUTEMAN'S LIMITS OF LIABILITY: Customer understands that Minuteman is not an insurer; that Customer is responsible for obtaining insurance for such reasons or purposes, including theft and vandalism, and in such amounts, as Customer shall determine. Customer further understands and agrees that the sums payable hereunder to Minuteman are based upon the value of services offered and equipment value provided and such sums are not related to the value of property belonging to Customer or to others located on the Covered Premises. Customer does not and shall not seek indemnity under this Agreement from Minuteman, and specifically waives any rights for indemnity for any damages or losses caused by hazards to customers, invitees, guests, or property of customer or third parties. Customer understands and agrees that the System and the services to be supplied hereunder are designed to detect security breaches, and that MINUTEMAN MAKES NO WARRANTY, EXPRESS OR IMPLIED, THAT THE SYSTEM OR THE SERVICES IT FURNISHES WILL AVERT OR PREVENT OCCURRENCES, OR THE CONSEQUENCES THEREFROM. Customer agrees that Minuteman shall not be liable to Customer, its employees, agents or guests, or to any third party, for any losses or damages, irrespective of origin, to person or property, whether directly or indirectly caused by performance or non-performance of obligations imposed upon Minuteman under this Agreement or by negligent acts or omissions of Minuteman, its agents or employees. In all events, it is further agreed that if Minuteman should become liable for any losses or damages for any reason having to do with this Agreement, Minuteman's total liability to Customer shall be limited $250., which sum the Customer agrees is reasonable. The payment of this amount shall be Minuteman's sole and exclusive liability regardless of the amount of loss or damage incurred by the Customer.

Indemnification:
Each party shall indemnify and hold harmless the other, their trustees, officers, professional staff, employees and agents from and against any loss, damage, claim or liability, including reasonable attorneys' fees (collectively "liabilities"), arising out of the performance of this Agreement to the extent that such liabilities arise from the acts or omissions, negligence, gross or reckless misconduct, or intentional wrongdoing of the indemnifying party, its trustees, officers, professional staff, employees or agents.

Minuteman Security Technologies, Inc Full One Year Limited Warranty:
What is Covered:

This warranty covers any defects in materials or workmanship, including installation, with the exceptions stated below.

How Long Coverage Lasts:

This warranty runs for one year from the date your system was installed and accepted.

What is not covered:

This warranty does not cover intentional or un-intentional misuse or of any of the system components or software. The warranty does not cover damage as a result of acts of god (lighting, floods, storms, etc...) or electric surge.

What Minuteman Will Do:
Minuteman will repair any part of the system that is proved to be defective in materials or workmanship. In the event repair is not possible on certain system components, Minuteman will replace said component with similar specification and price.

How To Get Service:

Contact our service department at your nearest service center. A service representative will review your system and take any necessary action to correct problems covered by this warranty.

How State Law Applies:

This warranty gives you specific legal rights, and you may also have other rights which vary from state to state.

VIGILANT SOLUTIONS

Quote For:

Glen Ellyn Police Department
Mobile LPR System for Parking Enforcement

Quoted By:

Vigilant Solutions, LLC
Kelly Kyriakos

Date: 10-18-18

Be Smart. Be Safe. Be Vigilant.

VIGILANT SOLUTIONS	Vigilant Solutions, LLC 1152 Stealth Street Livermore, California 94551 (P) 636-893-4825	Be smart. Be safe. Be Vigilant.

Attention:	Glen Ellyn Police Department	Date	10/18/2018
Project Name:	Mobile LPR System for Parking Enforcement	Quote Number:	KKY-0707-01

PROJECT QUOTATION

We at Vigilant Solutions are pleased to quote the following systems for the above referenced project:

Qty	Item #	Description
(1)	Mobile LPR SYS-1 CDM-2-22--RE	**Mobile LPR 2-Camera System w/ Integrated Processor (Expandable to 4 Cams)** Hardware: • Qty=2 Combination IR / Color LPR Cameras - 25mm lens package • Cameras w/ integrated solid state DSPs (No moving parts) • Wiring harness w/ ignition control (Direct to Battery) o Single point power connection • Field installed GPS receiver for MDC (USB Connect) Software: • CarDetector Mobile LPR software application for MDC unit o LPR vehicle license plate scanning / real time alerting o Full suite of LPR tools including video tool set
(2)	K-U-R-INTSUV-SET	**LPR Camera Mounting Kit for Interceptor SUV Roof** • Roof Mount Single LPR Camera Mounting Bracket - One per camera
(1)	USB-CABLE-EXTENDER-6FT	**USB CABLE EXTENDER 6FT** • USB Cable Extender for GPS Units
(1)	VSBSCSVC-01	**Vigilant LPR Basic Service Package for Hosted/Managed LPR Deployments** • Managed/hosted server account services by Vigilant o Includes access to all LEARN or Client Portal and CarDetector software updates • Priced per camera per year for up to 14 total camera units registered • Requires new/existing Enterprise Service Agreement (ESA)
(1)	VS-VPS-PT-01	**Parking Enforcement System Toolkit** • Annual fee per-system • Toolkit enables Vigilant LPR systems to receive alerts on chalking (timed parking) violations as well as whitelist violations for vehicles that have not paid, do not have permits, or are otherwise not on a registered list of vehicles • Included with a Vigilant Mobile System Subscription
(1)	SSU-SYS-COM	**Vigilant System Start Up & Commissioning of 'In Field' LPR system** • Vigilant technician to visit customer site • Includes system start up, configuration and commissioning of LPR system • Applies to mobile (1 System) and fixed (1 Camera) LPR systems
(1)	VS-TRNG	**Vigilant End User Training for LPR Systems** • End user training for Vigilant products o Covers all client purchased applications o Includes classroom and field operation training • Vigilant certified technician to visit site and perform one training class

(1)	VS-TRVL-01	**Vigilant Travel via Client Site Visit** • Vigilant certified technician to visit client site • Includes all travel costs for onsite support services
(1)	CDMS22HWW	**2-Camera Mobile LPR System - Extended Hardware Warranty - Years 2 & 3** • Full mobile LPR hardware component replacement warranty • Applies to 2-Camera hardware system kit • Valid for 2 years from standard warranty expiration
(1)	VS-SHP-01	**Vigilant Shipping & Handling Charges** • Applies to each Mobile LPR System • Shipping Method is FOB Shipping
Subtotal Price (Excluding sales tax)		**$18,883.00**

Quote Notes:

1. All prices are quoted in USD and will remain firm and in effect for 60 days.
2. Orders requiring immediate shipment may be subject to a 15% QuickShip fee.
3. Installation of system on vehicle is not included with this quote
4. 2 years of additional warranty quoted

Quoted by: Kelly Kyriakos - 636-893-4825 - kelly.kyriakos@vigilantsolutions.com

Total Price (Excluding sales tax)	**$18,883.00**

VIGILANT SOLUTIONS

Quote For:

Glen Ellyn Police Department
Mobile LPR System for Parking Enforcement--Parking Subscription

Quoted By:

Vigilant Solutions, LLC
Kelly Kyriakos

Date: 10-18-18

Be Smart. Be Safe. Be Vigilant.

VIGILANT SOLUTIONS	Vigilant Solutions, LLC 1152 Stealth Street Livermore, California 94551 (P) 636-893-4825	**Be smart. Be safe. Be Vigilant.**

Attention:	Glen Ellyn Police Department	Date	10/18/2018
Project Name:	Mobile LPR System for Parking Enforcement– Parking Subscription	Quote Number:	KKY-0707-02

PROJECT QUOTATION

We at Vigilant Solutions are pleased to quote the following systems for the above referenced project:

Qty	Item #	Description
(1)	VS-VPS-02-RE	**2-Camera Reaper Mobile LPR Subscription for Parking Enforcement** • 2-Camera Mobile LPR System for Parking Enforcement • Annual subscription to include all hardware, a LEARN or Client Portal account with unlimited data storage and users • Vigilant Parking Toolkit • Hardware warranty • Requires minimum 2-year commitment
(2)	K-U-R-INTSUV-SET	**LPR Camera Mounting Kit for Interceptor SUV Roof** • Roof Mount Single LPR Camera Mounting Bracket - One per camera
(1)	USB-CABLE-EXTENDER-6FT	**USB CABLE EXTENDER 6FT** • USB Cable Extender for GPS Units
(1)	VSBSCSVC-01	**Vigilant LPR Basic Service Package for Hosted/Managed LPR Deployments** • Managed/hosted server account services by Vigilant ○ Includes access to all LEARN or Client Portal and CarDetector software updates • Priced per camera per year for up to 14 total camera units registered • Requires new/existing Enterprise Service Agreement (ESA)
(1)	SSU-SYS-COM	**Vigilant System Start Up & Commissioning of 'In Field' LPR system** • Vigilant technician to visit customer site • Includes system start up, configuration and commissioning of LPR system • Applies to mobile (1 System) and fixed (1 Camera) LPR systems

(1)	VS-TRNG	**Vigilant End User Training for LPR Systems**
		• End user training for Vigilant products
		  ○ Covers all client purchased applications
		  ○ Includes classroom and field operation training
		• Vigilant certified technician to visit site and perform one training class

(1)	VS-TRVL-01	**Vigilant Travel via Client Site Visit** • Vigilant certified technician to visit client site • Includes all travel costs for onsite support services

(1)	VS-SHP-01	**Vigilant Shipping & Handling Charges** • Applies to each Mobile LPR System • Shipping Method is FOB Shipping	
Subtotal Price (Excluding sales tax)			**$10,633.00**

Quote Notes:

1. All prices are quoted in USD and will remain firm and in effect for 60 days.
2. Orders requiring immediate shipment may be subject to a 15% QuickShip fee.
3. All hardware components to have standard One (1) year hardware warranty.
4. All software to have standard one (1) year warranty for manufacturer defects.
5. Installation of system on vehicle is not included with this quote
6. 2 year commitment required on Parking subscription

Quoted by: Kelly Kyriakos - 636-893-4825 - kelly.kyriakos@vigilantsolutions.com

Total Price (Excluding sales tax)	**$10,633.00**

VIGILANT SOLUTIONS

Quote For:

Glen Ellyn Police Department
Fixed LPR--Intersection of Roosevelt Rd. and Baker Hill Dr.

Quoted By:

Vigilant Solutions, LLC
Kelly Kyriakos

Date: 10-18-18

Be Smart. Be Safe. Be Vigilant.

VIGILANT SOLUTIONS	Vigilant Solutions, LLC 1152 Stealth Street Livermore, California 94551 (P) 636-893-4825	Be smart. Be safe. Be Vigilant.

Attention:	Glen Ellyn Police Department	Date	10/18/2018
Project Name:	Fixed LPR–Intersection of Roosevelt Rd. and Baker Hill Dr.	Quote Number:	KKY-0706-01

PROJECT QUOTATION

We at Vigilant Solutions are pleased to quote the following systems for the above referenced project:

Qty	Item #	Description
(1)	**Fixed Camera LPR SYS-1** (3)VSF-XXX-H-RE	**Vigilant Fixed LPR Camera with Integrated Smart Processor** Hardware: • Integrated (Internal) solid state DSP Smart processor units - No moving parts o Plug-N-Play IP based camera with Power Over Ethernet (POE) • Includes field installed J-Box • Combination IR and Color lens config to be selected at time of order o Includes RAM mounting bracket Software: • Direct connect to Vigilant's nationally hosted LEARN LPR data server o Includes CarDetector LPR software for local server hosting • LPR vehicle license plate scanning / real time alerting o Full suite of LPR tools including data analytics
(1)	**Fixed Camera LPR SYS-2** (3)VSF-XXX-H-RE	**Vigilant Fixed LPR Camera with Integrated Smart Processor** Hardware: • Integrated (Internal) solid state DSP Smart processor units - No moving parts o Plug-N-Play IP based camera with Power Over Ethernet (POE) • Includes field installed J-Box • Combination IR and Color lens config to be selected at time of order o Includes RAM mounting bracket Software: • Direct connect to Vigilant's nationally hosted LEARN LPR data server o Includes CarDetector LPR software for local server hosting • LPR vehicle license plate scanning / real time alerting o Full suite of LPR tools including data analytics

(2)	BCAE1F2-A	**Four Camera Reaper Communications Box with cellular router and AT&T Modem - two cable glands** • Complete communications and power management solution for up to four (4) Reaper fixed cameras • Includes power management and voltage protection for all components, as well as a router for cellular communications between the cameras and the agency's LEARN account • Includes AT&T modem • Private Wi-fi access point for administrative access to cameras • Integrated GPS with integrated NTP server for accurate time stamps on all detections • Enclosed in a vented NEMA 3R enclosure with fan for cooling • Operational temperature spec -20C to 50C ambient • Two cable glands; one for power, one 3/4" for CAT5
(6)	VS-FX-UNI-POLE-WALL-BRKT_REV_B	**Fixed LPR Camera Bracket** • Pole or Wall Mount - UPR ARM ASSY POLE & WALL MOUNT BLK REV B
(1)	VSBSCSVC-01	**Vigilant LPR Basic Service Package for Hosted/Managed LPR Deployments** • Managed/hosted server account services by Vigilant o Includes access to all LEARN or Client Portal and CarDetector software updates • Priced per camera per year for up to 14 total camera units registered • Requires new/existing Enterprise Service Agreement (ESA)
(1)	TAS-UL	**Target Alert Service - LPR Alert Delivery Software - Unlimited User** • Real Time LPR notification and mapping software sends LPR alerts to any in-network PC • Send Alerts over any communication protocol including LAN, WAN, internet wireless, etc. • Server Client software compatible with all Vigilant CDFS applications
(6)	SSU-SYS-COM	**Vigilant System Start Up & Commissioning of 'In Field' LPR system** • Vigilant technician to visit customer site • Includes system start up, configuration and commissioning of LPR system • Applies to mobile (1 System) and fixed (1 Camera) LPR systems
(1)	VS-TRNG	**Vigilant End User Training for LPR Systems** • End user training for Vigilant products o Covers all client purchased applications o Includes classroom and field operation training • Vigilant certified technician to visit site and perform one training class
(1)	VS-TRVL-01	**Vigilant Travel via Client Site Visit** • Vigilant certified technician to visit client site • Includes all travel costs for onsite support services
(6)	VS-SHP-02	**Vigilant Shipping & Handling Charges** • Applies to each fixed camera LPR System • Shipping Method is FOB Shipping
Subtotal Price (Excluding sales tax)		**$59,930.00**

Quote Notes:

1. All prices are quoted in USD and will remain firm and in effect for 60 days.
2. Orders requiring immediate shipment may be subject to a 15% QuickShip fee.
3. All hardware components to have standard One (1) year hardware warranty.
4. All software to have standard one (1) year warranty for manufacturer defects.
5. This Quote is provided per our conversation & details given by you - not in accordance to any written specification.

6. Vigilant is not responsible for any Permit or CAD drawing costs
7. Installation costs not included and will be determined after site visit
8. Price assumes 120 constant power is easily accessible for each location
9. Quote assumes network is easily accessible or Sims cards will be furnished by customer
10. Work will be performed between 8-5 M-F

Quoted by: Kelly Kyriakos - 636-893-4825 - kelly.kyriakos@vigilantsolutions.com

Total Price (Excluding sales tax)	**$59,930.00**

VIGILANT
SOLUTIONS

Quote For:

Glen Ellyn Police Department
Fixed LPR--Intersection of Roosevelt Rd. and Baker Hill Dr.

Quoted By:

Vigilant Solutions, LLC
Kelly Kyriakos

Date: 10-24-18

Be Smart. Be Safe. Be Vigilant.

VIGILANT SOLUTIONS	**Vigilant Solutions, LLC** **1152 Stealth Street** **Livermore, California 94551** **(P) 636-893-4825**	**Be smart. Be safe. Be Vigilant.**

Attention:	Glen Ellyn Police Department	Date	10/24/2018
Project Name:	Fixed LPR–Intersection of Roosevelt Rd. and Baker Hill Dr.	Quote Number:	KKY-0706-02

PROJECT QUOTATION

We at Vigilant Solutions are pleased to quote the following systems for the above referenced project:

Qty	Item #	Description
(1)	**Fixed Camera LPR SYS-1** (3)VSF-XXX-H-RE	**Vigilant Fixed LPR Camera with Integrated Smart Processor** Hardware: • Integrated (Internal) solid state DSP Smart processor units - No moving parts o Plug-N-Play IP based camera with Power Over Ethernet (POE) • Includes field installed J-Box • Combination IR and Color lens config to be selected at time of order o Includes RAM mounting bracket Software: • Direct connect to Vigilant's nationally hosted LEARN LPR data server o Includes CarDetector LPR software for local server hosting • LPR vehicle license plate scanning / real time alerting o Full suite of LPR tools including data analytics
(1)	**Fixed Camera LPR SYS-2** (3)VSF-XXX-H-RE	**Vigilant Fixed LPR Camera with Integrated Smart Processor** Hardware: • Integrated (Internal) solid state DSP Smart processor units - No moving parts o Plug-N-Play IP based camera with Power Over Ethernet (POE) • Includes field installed J-Box • Combination IR and Color lens config to be selected at time of order o Includes RAM mounting bracket Software: • Direct connect to Vigilant's nationally hosted LEARN LPR data server o Includes CarDetector LPR software for local server hosting • LPR vehicle license plate scanning / real time alerting o Full suite of LPR tools including data analytics

(2)	BCAE1F2-A	Four Camera Reaper Communications Box with cellular router and AT&T Modem - two cable glands • Complete communications and power management solution for up to four (4) Reaper fixed cameras • Includes power management and voltage protection for all components, as well as a router for cellular communications between the cameras and the agency's LEARN account • Includes AT&T modem • Private Wi-fi access point for administrative access to cameras • Integrated GPS with integrated NTP server for accurate time stamps on all detections • Enclosed in a vented NEMA 3R enclosure with fan for cooling • Operational temperature spec -20C to 50C ambient • Two cable glands; one for power, one 3/4" for CAT5
(6)	VS-FX-UNI-POLE-WALL-BRKT_REV_B	**Fixed LPR Camera Bracket** • Pole or Wall Mount - UPR ARM ASSY POLE & WALL MOUNT BLK REV B
(1)	VSBSCSVC-01	**Vigilant LPR Basic Service Package for Hosted/Managed LPR Deployments** • Managed/hosted server account services by Vigilant o Includes access to all LEARN or Client Portal and CarDetector software updates • Priced per camera per year for up to 14 total camera units registered • Requires new/existing Enterprise Service Agreement (ESA)
(1)	TAS-UL	**Target Alert Service - LPR Alert Delivery Software - Unlimited User** • Real Time LPR notification and mapping software sends LPR alerts to any in-network PC • Send Alerts over any communication protocol including LAN, WAN, internet wireless, etc. • Server Client software compatible with all Vigilant CDFS applications
(6)	SSU-SYS-COM	**Vigilant System Start Up & Commissioning of 'In Field' LPR system** • Vigilant technician to visit customer site • Includes system start up, configuration and commissioning of LPR system • Applies to mobile (1 System) and fixed (1 Camera) LPR systems
(1)	VS-TRNG	**Vigilant End User Training for LPR Systems** • End user training for Vigilant products o Covers all client purchased applications o Includes classroom and field operation training • Vigilant certified technician to visit site and perform one training class
(1)	VS-TRVL-01	**Vigilant Travel via Client Site Visit** • Vigilant certified technician to visit client site • Includes all travel costs for onsite support services
(6)	VS-SHP-02	**Vigilant Shipping & Handling Charges** • Applies to each fixed camera LPR System • Shipping Method is FOB Shipping
(6)	CDFS-4HWW	**Fixed Camera LPR System - Extended Hardware Warranty - Year 2 through 5** • Fixed LPR System LPR hardware component replacement warranty • Applies to 1-Channel hardware system kit • Valid for 4 years from standard warranty expiration
Subtotal Price (Excluding sales tax)		$67,130.00

Quote Notes:

1. All prices are quoted in USD and will remain firm and in effect for 60 days.

2. Orders requiring immediate shipment may be subject to a 15% QuickShip fee.
3. This Quote is provided per our conversation & details given by you - not in accordance to any written specification.
4. Vigilant is not responsible for any Permit or CAD drawing costs
5. Installation costs not included and will be determined after site visit
6. Price assumes 120 constant power is easily accessible for each location
7. Quote assumes network is easily accessible or Sims cards will be furnished by customer
8. Work will be performed between 8-5 M-F

Quoted by: Kelly Kyriakos - 636-893-4825 - kelly.kyriakos@vigilantsolutions.com

Total Price (Excluding sales tax)	**$67,130.00**

Glen Ellyn Village Board
535 Duane Street
Glen Ellyn, IL 60137

Meeting: 02/11/19 07:00 PM
Department: Police
Department Head: Phil Norton
Category: Purchase
Prepared By: Christine Miller

SCHEDULED

AGENDA ITEM (ID # 3780) DOC ID: 3780

Waive competitive bidding and approve the purchase of two electronic kiosks from Total Parking Solutions in the amount of $23,100 to be expensed to the Parking Fund (Police Chief Norton)

Background

In September of 2018, information was shared with the Village Board during a workshop meeting regarding staff exploring the use of newer parking technologies for the Duane and Lorraine parking lot. The purpose of this document is to offer the available options for the parking lot.

Village staff recommends purchasing two electronic kiosks from Total Parking Solutions to compliment the Passport mobile parking application. The use of electronic kiosks provides an option for users to pay with cash or credit card. Consideration should also be given that not all users have smart phones and subsequently would not have the ability to pay for parking without the kiosks. Two parking kiosks are being recommended to avoid users from having to wait in line. Shortly before the arrival of trains, it is common for users of the lot to wait in line at the pay boxes to deposit the daily fee. The kiosks require a power source. Three estimates were obtained and the bids are shown in the table below. The left column indicates the proposed locations of the electronic kiosks.

	Utility Dynamics Corporation	Elmund & Nelson	Thorne Electric, Inc.
N/E Corner of Lot	$9,770	$7,735	$9,251
Current Pay Box Location	$8,420	$4,905	$7,719

Option one is to install the electronic kiosks in the northeast corner of the Duane and Lorraine parking lot. There is a path from the corner of the parking lot which connects to the Prairie Path. A majority of the users of the parking lot take this path while walking to the train station. This option is considered the most convenient option for the users due to its proximity to the parking lot. The kiosks could be installed at the vehicular entrance of the parking lot which would greatly reduce the installation costs (horizontal boring, conduit and wire). However, users may become frustrated they have to walk in the opposite direction of their intended destination to use the kiosks.

Kiosks Cost	Electrical and Concrete Work	Total (estimate)
$23,100*	$7,735	**$30,835**

Option two is to install the kiosks at the existing location of the current pay boxes at the Prairie

Path and Prospect Ave.

Kiosks Cost	Electrical and Concrete Work	Total (estimate)
$23,100*	$4,905	**$28,005**

*There is an annual cost of $1,380 a year per kiosk beginning the second year of operation.

Option three would be to forgo the use of electronic kiosks and only use the Passport parking application. As mentioned in the previous memorandum, the use of the Passport mobile application is free to the Village. Users pay for the service through fees.

Budget Impact

The costs associated with this project will be drawn from the parking fund. As part of the budget amendments which will be considered on February 25, $24,000 will be rolled forward from the revised 2018 budget which was unused.

Recommendation

On January 14, 2019, this project was discussed at a Village Board workshop meeting and approved to move forward. Following those discussions, it is recommended to proceed with option one. Option one calls for two kiosks to be placed near the northeast corner of the parking lot. Should two kiosks be installed and it is later determined a majority of the users are paying with the Passport mobile parking application, the kiosk could be relocated for use in another parking lot or future parking garage.

ATTACHMENTS:

- Parking Tech - Electrical and Concrete Proposals (PDF)

UPDATED

Thorne Electric, Inc.
Electrical Contract
PROPOSAL

October 26, 2018

ATTN: Mike Zitzka
Village of Glen Ellyn – Public Works
30 S. Lambert Rd.
Glen Ellyn, IL 60137

Revised

Job Name: Directional Bore at 2 Locations
1) Duane St. and Lorraine St.
2) Duane St. and Prospect Ave.

Location: Glen Ellyn, IL

The undersigned, Thorne Electric, Inc., proposes to furnish equipment, labor, and material to directional bore and install 1" uniduct with 3 #8 XLP conductors from the controllers, both off of Duane St., to kiosk boxes.

Directional bore, Lorraine St. Includes tie-in to control box w/circuit breaker and stub up at kiosk, plus a 2' X 4' X 6" concrete pad at kiosk	$ 9,250.57
Directional bore, Prospect Ave. Includes tie-in to control box w/circuit breaker and stub up at kiosk, plus cut out for pipe entrance at kiosk	$ 7,718.51
Total	**$16,969.08**

This proposal does not include utility locates in the street – opening the road for locates will be on a time and material basis.

Notes:
-Seeding is included in this price.
-Soil testing is not included in price.
-Concrete testing is not included in price.
-All engineering and construction layout by others.
-Permits and fees by others.
-Thorne Electric, Inc. reserves the right to correct any clerical errors in the proposal

All of the above work to be completed in a substantial and workmanlike manner. Thorne Electric, Inc. agrees to carry Workmen's Compensation and Public Liability Insurance, also to pay Old Age Benefit and Unemployment Compensation Taxes upon the labor furnished under this contract, as required by the United States Government and the State of Illinois. This proposal is valid for acceptance within 30 days. Payment terms are net 30 days. Customer agrees to pay interest on past due amounts at the rate of 1.5% compounded monthly plus all costs of collection and reasonable attorney's fees.

THORNE ELECTRIC, INC.
P.O. BOX 321
WHEATON, ILLINOIS 60187
PHONE: (630)668-4853
FAX: (630)668-4879

Respectfully submitted,
THORNE ELECTRIC, INC.

David Gaffney, Estimator

You are hereby authorized to furnish all materials and labor required to complete the work described above, for which the undersigned agrees to pay the amount quoted above, and according to the terms thereof.

ACCEPTED BY: _____ DATE: _____

UTILITY DYNAMICS CORPORATION

23 COMMERCE DRIVE
OSWEGO, ILLINOIS 60543
e-mail: contact@utilitydynamicscorp.com

PHONE:
(630) 554-1722
FAX (630) 554-1195

ELECTRICAL CONTRACTORS • OVERHEAD LINE CONSTRUCTION • UNDERGROUND DISTRIBUTION SYSTEMS

October 25, 2018

RE: Kiosk Box Power Feed

Village of Glen Ellyn
535 Duane St,
Glen Ellyn, IL 60137
Attn: Mike Zitka

Dear Sir:

Utility Dynamics Corporation appreciates the opportunity to quote the following per your request.

A: Power from controller west of library
1) Furnish & install approximately 420 Lf of 1" polyduct via horizontal directional drill method.
2) Furnish & install approximately 440 Lf of 3-#8 conductor in above conduit.
3) Enter controller through existing conduit sleeve and terminate wire on a new breaker.

LUMP SUM: $7,830.00

Option 1) Furnish & install concrete foundation with ground rod, 12" cylinder, 42" deep.
2) 48"X 24" pad. Set equipment attachment (furnished by others).

LUMP SUM: $1,940.00

B: Power from controller east of Prospect Ave and south of the Prairie Path.
1) Furnish & install approximately 240 Lf of 1" polyduct via horizontal directional drill method.
2) Furnish & install approximately 260 Lf of 3-#8 conductor in the above conduit.
3) Enter controller through existing conduit sleeve and terminate wire on a new breaker.

LUMP SUM: $6,480.00

Option 1) Furnish & install concrete foundation with ground rod. 12" cylinder, 42" deep.
2) 48"X 24" pad. Set equipment attachment (furnished by others).

LUMP SUM: $1,940.00

Clarifications:
1) Restoration with seed & blanket.
2) Concrete or asphalt removal & repair at applicable T&E rates.
3) Obstruction removal at applicable T&E rates.
4) Permits, drawings, etc. are by others.
5) Pricing is based on useable conduit sleeves.

Once again Utility Dynamics Corporation appreciates this opportunity to provide this budget. If and when you are ready to proceed further, we can firm up pricing on your requirements.

Sincerely,
Utility Dynamics Corporation

Joseph B. Spencer
President

Mike Zitzka

From: Elmund & Nelson <elmundnelson@sbcglobal.net>
Sent: Friday, November 02, 2018 11:32 AM
To: Mike Zitzka
Subject: Fw: Glen Ellyn - electrical
Attachments: Glen Ellyn Baker Hill KD.pdf

Mike,

[redacted]

Here are the revised numbers for the kiosk work:

Prospect Ave Location

Directional Bore 234' of 1" duct	-	$2,640.00
provide & pull 3-1/C #8 wires	-	460.00
Connect to Controller, install 20A	-	825.00
slot concrete, stub on column	-	980.00

Lorraine Rd Location

Directional Bore 413' of 1.5" duct	-	$3,990.00
provide & pull 3-1/C #8 wires	-	820.00
Connect to Controller, install 20A	-	825.00
Pour Concrete Foundation (up to 2'x4')		2,100.00

Thanks,

Ryan Nelson
Elmund & Nelson Co.
847 695-7000

[redacted]

[redacted]

[redacted]

Glen Ellyn Village Board
535 Duane Street
Glen Ellyn, IL 60137

Meeting: 02/11/19 07:00 PM
Department: Public Works
Department Head: Julius Hansen
Category: Purchase
Prepared By: Julius Hansen

SCHEDULED

AGENDA ITEM (ID # 3800) DOC ID: 3800

Motion pursuant to Section 1-10-7 of the Glen Ellyn Village Code to adopt the competitive bidding procedures of the U.S. Communities Program in lieu of the provisions of Chapter 10 on Village Contracts and approve Purchase of 65 LED Street Light Fixtures for Residential Streets in the amount of $24,938, to be expensed to the General Fund (Public Works Director Hansen)

Background:
The Village is responsible for the remaining 65 street lights on residential streets that have not yet been converted to LED. Once these village owned street lights are converted to LED, the only remaining street lights that need to be converted to LED are the 38 street lights at Main St. & St. Charles Rd. and a large project on Rt.38.

Subject:
In the SE quadrant of the village 24 street lights need to be converted to LED, in the Raintree area another 29 street lights need to be converted to LED, with the remaining LED conversion of 12 street lights in the Danby neighborhood. The replacement of the old existing street light fixtures with new energy efficient LED fixtures will save energy therefore paying for themselves in the long term.

Budget Impact:
The amount of $26,000 has been budgeted for this specific project (account 143300-580110). The lowest proposal for the new LED fixtures is $24,938.00 but a grant will reimburse the village $7,321.44 once the project is complete. The total cost for the LED fixtures will be $17,616,56. An additional proposal for the installation of these lights was $19,840. The Public Works Street Division will install all these lights so installation will have zero impact on the budget. The Village will save over $27,000 on this project. These LED street light fixtures will be purchased as part of the U.S. Communities contract #EV2370 a purchasing cooperative.

Action Requested:
Approve the purchase of the LED street light fixtures as described in the Graybar proposal for the amount of $24,938.

ATTACHMENTS:

- contractor quote to install (PDF)
- Graybar Quotation_0231919277_STREETLIGHT LED PROJECTS_final with rebate amounts (PDF)
- Stiener Quote BID-1547156778390-7894 AVPL2 and 247L (PDF)
- Grainger VILLAGEOFGLENELLYNQTE2039064847 Cree (PDF)

- LED Cost Sheet (PDF)
- Traffic Control Corp QUOTE 625051 VILLAGE OF GLEN ELLYN Cree (PDF)
- US Communities (PDF)

UTILITY DYNAMICS CORPORATION

23 COMMERCE DRIVE
OSWEGO, ILLINOIS 60543
e-mail: contact@utilitydynamicscorp.com

PHONE:
(630) 554-1722
FAX (630) 554-1195

ELECTRICAL CONTRACTORS • OVERHEAD LINE CONSTRUCTION • UNDERGROUND DISTRIBUTION SYSTEMS

January 28, 2019

#19-014
(2 Pages)

Village of Glen Ellyn
Reno Public Works Facility
30 S. Lambert Road
Glen Ellyn, IL 60137

Attn: Mike Zitzka
email: mikez@glenellyn.org

Subject: **Budget** Cost Estimate
Roadway and Post Top LED Luminaire Upgrade
Raintree Area

Mike:

Utility Dynamics Corporation ('UDC') is pleased to provide the Village of Glen Ellyn (VOGE) with our **budget** cost estimate for the above referenced project. Our scope and budget numbers are as follows:

1. Post Top Luminaires:
   - Remove the existing post top HID luminaire and return to the VOGE.
   - Install a new LED post top luminaire, supplied by the VOGE.
   - Test the operation of the luminaire.

   Unit Price…$200.00.

2. Roadway Luminaire:
   - Remove the existing roadway luminaire and return to the VOGE.
   - Install a new LED roadway luminaire, supplied by the VOGE.
   - Test the operation of the luminaire.

   Unit Price…$170.00.

3. Re-Wire Existing Pole, 16' Tall:
   - Remove the existing pole wire and fuse holder(s).
   - Install new 3-1/C pole wire and fuse holder(s), supplied by the VOGE.

   Unit Price…$240.00.

The following clarifications are applicable:

1. All work to be performed within a subdivision, requiring basic traffic control and protection (RCA signs and cones.)

2. All of the luminaires shall be in general close proximity to one and other. Excessive travel times between luminaires will increase the cost.
3. All materials are to be supplied by the VOGE.
4. Pricing does not include any wiring modifications, unless the pole wire is replaced.
5. Pricing does not include drilling out and re-tapping any of the existing fasteners.
6. Pricing is based upon the work being available for completion prior to the end of summer, 2019.
7. All work is to be performed during normal straight time hours.
8. Sales Tax is not included.
9. Bonds, permits, license or special fees are not reflected in the budget numbers.
10. Payment or performance bond costs are not reflected in the budget numbers.
11. Pricing is based upon standard insurance coverage.
12. Pricing is based upon Prevailing Wages.

Thank you for the opportunity to assist the VOGE with this potential project.

Please contact us if you have any questions regarding this **Budget** Cost Estimate.

Sincerely,
Utility Dynamics Corporation

Philip A. Whalen

This document contains information that is considered confidential or privileged. The information is intended to be for the use of the person or entity named above. Please be aware that any disclosure, copying, distribution or use of the concerns of this document is prohibited.

900 REGENCY DR
GLENDALE HEIGHTS IL 60139-2287
Phone: 630-671-6000
Fax: 630-671-6953

To: VILLAGE OF GLEN ELLYN
535 DUANE ST
GLEN ELLYN IL 60137-4675
Attn: MIKE NICKELS
Phone: 000-469-5000
Fax:
Email:

Date: 01/25/2019
Proj Name: STREETLIGHT LED PROJECTS
GB Quote #: 0231919277
Release Nbr:
Purchase Order Nbr:
Additional Ref#
Valid From: 01/25/2019
Valid To: 02/24/2019
Contact: ALDO MALDONADO
Email: aldo.maldonado@graybar.com

Proposal

We Appreciate Your Request and Take Pleasure in Responding As Follows

Notes: TOTAL WATTS REDUCED = 8,716
TOTAL PROJECT COMED REBATE = $7,321.44

Item	Item/Type	Quantity	Supplier	Catalog Nbr	Description	Price	Unit	Ext.Price
100		**24 EA**	**HOLOPHANE**	**247L 10LEDE10 MVOLT 4K R2 AY PCLL TL**		**$410.00**	**1**	**$9,840.00**

Item Note: **ESTIMATED COMED REBATE FOR 247L FIXTURES**

EXISITNG WATTAGE = 188
PROPOSED WATTAGE = 39
DIFFERENCE = 149

COMED REBATE = $0.84 PER WATT REDUCED
149 (0.84) = $125.16

$125.16 (24 FIXTURES) = $3,003.84 TOTAL REBATE

200		**29 EA**	**HOLOPHANE**	**AVPL2 20LEDE10 MVOLT 3K R2 AY PCLL TL**		**$442.00**	**1**	**$12,818.00**

Item Note: **ESTIMATED COMED REBATE FOR AVPL2 FIXTURES**

EXISITNG WATTAGE = 188
PROPOSED WATTAGE = 72
DIFFERENCE = 116

COMED REBATE = $0.84 PER WATT REDUCED
116 (0.84) = $97.44

This equipment and associated installation charges may be financed for a low monthly payment through Graybar Financial Services (subject to credit approval). For more information call 1-800-241-7408 to speak with a leasing specialist.

To learn more about Graybar, visit our website at www.graybar.com **24-Hour Emergency Phone#: 1-800-GRAYBAR**

Subject to the standard terms and conditions set forth in this document. Unless otherwise noted,freight terms are F.O.B. shipping point prepaid and bill.
Unless noted the estimated ship date will be determined at the time of order placement.

GLEN ELLYN IL 60137-4675
Attn: MIKE NICKELS

Date: 01/25/2019
Proj Name: STREETLIGHT LED PROJECTS
GB Quote #: 0231919277

Proposal

We Appreciate Your Request and Take Pleasure in Responding As Follows

$97.44 (29 FIXTURES) = $2,825.76 TOTAL REBATE

300	**12 EA**	**CREE LED LIGHTING SO**	**RSWS-A-HT-3ME-5L-40K7-UL-GY-N-Q4**	**$190.00**	**1**	**$2,280.00**

Item Note: **ESTIMATED COMED REBATE FOR RSW FIXTURES**

EXISITNG WATTAGE = 188
PROPOSED WATTAGE = 40
DIFFERENCE = 148

COMED REBATE = $0.84 PER WATT REDUCED
148 (0.84) = $124.32

$124.32 (12 FIXTURES) = $1,491.84 TOTAL REBATE

Total in USD (Tax not included): $24,938.00

This equipment and associated installation charges may be financed for a low monthly payment through Graybar Financial Services (subject to credit approval). For more information call 1-800-241-7408 to speak with a leasing specialist.

To learn more about Graybar, visit our website at www.graybar.com **24-Hour Emergency Phone#: 1-800-GRAYBAR**

Subject to the standard terms and conditions set forth in this document. Unless otherwise noted,freight terms are F.O.B. shipping point prepaid and bill.
Unless noted the estimated ship date will be determined at the time of order placement.

GLEN ELLYN IL 60137-4675
Attn: MIKE NICKELS

Date: 01/25/2019
Proj Name: STREETLIGHT LED PROJECTS
GB Quote #: 0231919277

Proposal

We Appreciate Your Request and Take Pleasure in Responding As Follows

GRAYBAR ELECTRIC COMPANY, INC.
TERMS AND CONDITIONS OF SALE

1. ACCEPTANCE OF ORDER; TERMINATION - Acceptance of any order is subject to credit approval and acceptance of order by Graybar Electric Company, Inc. ("Graybar") and, when applicable, Graybar's suppliers. If credit of the buyer of the goods ("Buyer") becomes unsatisfactory to Graybar, Graybar reserves the right to terminate upon notice to Buyer and without liability to Graybar.

2. PRICES AND SHIPMENTS - Unless otherwise quoted, prices shall be those in effect at time of shipment, which shall be made F.O.B. shipping point, prepaid and bill.

3. RETURN OF GOODS - Credit may be allowed for goods returned with prior approval. A deduction may be made from credits issued to cover cost of handling.

4. TAXES - Prices shown do not include sales or other taxes imposed on the sale of goods. Taxes now or hereafter imposed upon sales or shipments will be added to the purchase price. Buyer agrees to reimburse Graybar for any such tax or provide Graybar with acceptable tax exemption certificate.

5. DELAY IN DELIVERY - Graybar is not to be accountable for delays in delivery occasioned by acts of God, failure of its suppliers to ship or deliver on time, or other circumstances beyond Graybar's reasonable control. Factory shipment or delivery dates are the best estimates of our suppliers, and in no case shall Graybar be liable for any consequential or special damages arising from any delay in shipment or delivery.

6. LIMITED WARRANTIES - Graybar warrants that all goods sold are free of any security interest and will make available to Buyer all transferable warranties (including without limitation warranties with respect to intellectual property infringement) made to Graybar by the manufacturer of the goods. GRAYBAR MAKES NO OTHER EXPRESS OR IMPLIED WARRANTIES, AND SPECIFICALLY DISCLAIMS ALL IMPLIED WARRANTIES INCLUDING BUT NOT LIMITED TO THE IMPLIED WARRANTIES OF MERCHANTABILITY AND FITNESS FOR PURPOSE. UNLESS OTHERWISE AGREED IN WRITING BY AN AUTHORIZED REPRESENTATIVE OF GRAYBAR, PRODUCTS SOLD HEREUNDER ARE NOT INTENDED FOR USE IN OR IN CONNECTION WITH (1) ANY SAFETY APPLICATION OR THE CONTAINMENT AREA OF A NUCLEAR FACILITY, OR (2) IN A HEALTHCARE APPLICATION, WHERE THE GOODS HAVE POTENTIAL FOR DIRECT PATIENT CONTACT OR WHERE A SIX (6) FOOT CLEARANCE FROM A PATIENT CANNOT BE MAINTAINED AT ALL TIMES.

7. LIMITATION OF LIABILITY - Buyer's remedies under this agreement are subject to any limitations contained in manufacturer's terms and conditions to Graybar, a copy of which will be furnished upon written request. Furthermore, Graybar's liability shall be limited to either repair or replacement of the goods or refund of the purchase price, all at Graybar's option, and IN NO CASE SHALL GRAYBAR BE LIABLE FOR INCIDENTAL, SPECIAL, OR CONSEQUENTIAL DAMAGES. In addition, claims for shortages, other than loss in transit, must be made in writing not more than five (5) days after receipt of shipment.

8. WAIVER - The failure of Graybar to insist upon the performance of any of the terms or conditions of this agreement or to exercise any right hereunder shall not be deemed to be a waiver of such terms, conditions, or rights in the future, nor shall it be deemed to be a waiver of any other term, condition, or right under this agreement.

9. MODIFICATION OF TERMS AND CONDITIONS - These terms and conditions supersede all other communications, negotiations, and prior oral or written statements regarding the subject matter of these terms and conditions. No change, modification, rescission, discharge, abandonment, or waiver of these terms and conditions shall be binding upon Graybar unless made in writing and signed on its behalf by a duly authorized representative of Graybar. No conditions, usage of trade, course of dealing or performance, understanding or agreement, purporting to modify, vary, explain, or supplement these terms and conditions shall be binding unless hereafter made in writing and signed by the party to be bound. Any proposed modifications or additional terms are specifically rejected and deemed a material alteration hereof. If this document shall be deemed an acceptance of a prior offer by Buyer, such acceptance is expressly conditional upon Buyer's assent to any additional or different terms set forth herein.

10. REELS - When Graybar ships returnable reels, a reel deposit may be included in the invoice. The Buyer should contact the nearest Graybar service location to return reels.

11. CERTIFICATION - Graybar hereby certifies that these goods were produced in compliance with all applicable requirements of Sections 6, 7, and 12 of the Fair Labor Standards Act, as amended, and of regulations and orders of the United States Department of Labor issued under Section 14 thereof. This agreement is subject to Executive Order 11246, as amended, the Rehabilitation Act of 1973, as amended, the Vietnam Veterans' Readjustment Assistance Act of 1974, as amended, E.O. 13496, 29 CFR Part 471, Appendix A to Subpart A, and the corresponding regulations, to the extent required by law. 41 CFR 60-1.4, 60-741.5, and 60-250.5 are incorporated herein by reference, to the extent legally required.

12. FOREIGN CORRUPT PRACTICES ACT - Buyer shall comply with applicable laws and regulations relating to anti-corruption, including, without limitation, (i) the United States Foreign Corrupt Practices Act (FCPA) (15 U.S.C. §§78dd-1, et. seq.) irrespective of the place of performance, and (ii) laws and regulations implementing the Organization for Economic Cooperation and Development's Convention on Combating Bribery of Foreign Public Officials in International Business Transactions, the U.N. Convention Against Corruption, and the Inter-American Convention Against Corruption in Buyer's country or any country where performance of this agreement or delivery of goods will occur.

13. ASSIGNMENT - Buyer shall not assign its rights or delegate its duties hereunder or any interest herein without the prior written consent of Graybar, and any such assignment, without such consent, shall be void.

14. GENERAL PROVISIONS - All typographical or clerical errors made by Graybar in any quotation, acknowledgment or publication are subject to correction. This agreement shall be governed by the laws of the State of Missouri applicable to contracts to be formed and fully performed within the State of Missouri, without giving effect to the choice or conflicts of law provisions thereof. All suits arising from or concerning this agreement shall be filed in the Circuit Court of St. Louis County, Missouri, or the United States District Court for the Eastern District of Missouri, and no other place unless otherwise determined in Graybar's sole discretion. Buyer hereby irrevocably consents to the jurisdiction of such court or courts and agrees to appear in any such action upon written notice thereof.

15. PAYMENT TERMS - Payment terms shall be as stated on Graybar's invoice or as otherwise mutually agreed. As a condition of the sales agreement, a monthly service charge of the lesser of 1-1/2% or the maximum permitted by law may be added to all accounts not paid by net due date. Visa, MasterCard, American Express, and Discover credit cards are accepted at point of purchase only.

16. EXPORTING - Buyer acknowledges that this order and the performance thereof are subject to compliance with any and all applicable United States laws, regulations, or orders. Buyer agrees to comply with all such laws, regulations, and orders, including, if applicable, all requirements of the International Traffic in Arms Regulations and/or the Export Administration Act, as may be amended. Buyer further agrees that if the export laws are applicable, it will not disclose or re-export any technical data received under this order to any countries for which the United States government requires an export license or other supporting documentation at the time of export or transfer, unless Buyer has obtained prior written authorization from the United States Office of Export Control or other authority responsible for such matters.

Signed:_____

This equipment and associated installation charges may be financed for a low monthly payment through Graybar Financial Services (subject to credit approval). For more information call 1-800-241-7408 to speak with a leasing specialist.

To learn more about Graybar, visit our website at www.graybar.com **24-Hour Emergency Phone#: 1-800-GRAYBAR**

Subject to the standard terms and conditions set forth in this document. Unless otherwise noted,freight terms are F.O.B. shipping point prepaid and bill.
Unless noted the estimated ship date will be determined at the time of order placement.

STEINER

Expiration Date: 02/09/19

Quotation

TO:
VILLAGE OF GLEN ELLYN
Attn:MIKE NICKELS
535 DUANE ST
GLEN ELLYN, IL 60137-4675

Project Info:

Project:	VILLAGE OF GLEN ELLYN PUBLIC WORKS
Job #:	78988
Bid Date:	01/10/19
Bid Time:	01:00 PM CST
Quoter:	KOHLER, KAITLYN

Type	Quantity	Vendor	Description	Unit or Lot#	Unit Price	Ext Price
	29	AMERELEC	AVPL2 ??LEDE10 MVOLT 3K R2 AY PCLL TL	Unit	675.000/EA	19,575.00
	24	AMERELEC	247L 10LEDE10 MVOLT 4K R2 AY PCLL TL	Unit	460.000/EA	11,040.00

Freight claims must be submitted within 10 business days of delivery.
***If Attic Stock is required, please provide information. No Attic Stock will be included unless advised ***
**** TAX NOT INCLUDED IN TOTAL ****
Pricing is based on the quantities provided. Please verify that counts on Fixtures,Lamps and Accessories meet your required totals. Any variance may require re-quote.
Expedited shipments may incur freight charges. All LIFT-GATE Charges Extra
Any delivery address changes may incur re-consignment fees as determined by the carrier.
All lamps subject to stock availability at time of order.

From:
STEINER ELECTRIC-ELK GROVE
GENERAL CONTACT 847-228-0400
1250 TOUHY AVE
ELK GROVE VLG, IL 60007-5302
Printed By: KOHLER, KAITLYN

Total	30,615.00

Notes
TRANSACTIONS BASED ON THIS QUOTE WILL BE GOVERNED BY STEINER'S TERMS & CONDITIONS OF SALE. A COPY CAN BE FOUND AT STEINERELECTRIC.COM OR UPON REQUEST.

Customer Quotation

GRAINGER

Ship To:	Information	
VILLAGE OF GLEN ELLYN	Grainger Quote Number	2039064847
	Print Date	01/15/2019
30 S LAMBERT RD	Customer Account	801555681
GLEN ELLYN, IL 60137-6200	Department Number	
US	Contact Name	MIKE NICKELS
Shipper Account:	Contact Phone	6307420676
	Contact Fax	
	Contact Email	mnickels@glenellyn.org
	Requested by	Maria Landes
	Requestor Phone No.	
	Requestor Fax	
	Requestor Email	Maria.Landes@grainger.com

eQuote Information:
Quote 2039064847 has been delivered to Grainger websites and Mike Nickels has been notified via email that the quote is available for on-line purchasing.

Comments:

Line	Description	MFG Part No	Lead Time Bus.days	Qty.	Unit	Quote Price	Extended Price
10	LIGHT FIXTURE(RSWS-A-HT-3ME-5L-40K7-UL-GY-N-Q4) Mfr Brand Name CREE Customer Part No.: 3ME-5L-40K7-UL-GY-N-X9 Carrier: 29811 - UPS GROUND Cost expiration date: 02/14/2019 Taxable: NO	SEE DESCRIPTION	25	1	EA	262.29	262.29
20	-- NO QUOTE -- SEE ITEM NOTES FOR DETAILS --LIGHT FIXTURE Mfr Brand Name CREE Customer Part No.: Cost expiration date: Taxable: NO Notes: --Part Number Revised - Order as Part Number RSWS-A-HT-3ME-5L-40K7-UL-GY-N-Q4	3ME-5L-40K7-UL-GY-N-X9		1	EA	0.00	0.00

Thank You!
Call or visit us at
1150 W Grove Parkway,Suite 101
Tempe, AZ 85283

Customer Quotation

Information	
Grainger Quote Number	2039064847
Print Date	01/15/2019
Customer Account	801555681
Page	2 / 2

Total Sell Price in USD 262.29

This is not an invoice. Changes to product or quantities may result in different pricing. Availability and lead times are subject to change and can be confirmed at order placement. Additional lead time may apply for AK and HI. Unless otherwise stated, these items are sold for domestic consumption in the United States. If exported, purchaser assumes full responsibility for compliance with U. S. export control. Contact Sales Rep.or Grainger branch listed below for questions, order placement or to submit a new request. **Return Policy: Please contact Grainger before returning any product. All returns are subject to the manufacturer's return policy. Special Order items may not be returnable. Restocking fees may apply.**

Thank You!

Call or visit us at
1150 W Grove Parkway,Suite 101
Tempe, AZ 85283

2019 LED Lighting Change Out					
Type	Quantity	Cost Each	Total Cost	Comed Rebate Per Fixture Type	
Holophane 247L	24	$410.00	$9,840.00	$3,003.84	
Holophane AVPL2	29	$442.00	$12,818.00	$2,825.76	
CREE RSWS	12	$190.00	$2,280.00	$1,491.84	Grand total after rebate
		Total for all Fixtures	**$24,938.00**	$7,321.44	**$17,616.56**

Price Quote Comparison					
Type	Vendor	Quantity	Cost Per Light	Total Cost	
Holophane 247L	GraybaR	24	**$410.00**	**$9,840.00**	Cheapest
	STEINER	24	$460.00	$11,040.00	
Holophane AVPL2	GraybaR	29	**$442.00**	**$12,818.00**	Cheapest
	STEINER	29	$675.00	$19,575.00	
CREE RSWS	GraybaR	12	**$190.00**	**$2,280.00**	Cheapest
	TRAFFIC CONTROL CORP.	12	$230.00	$2,760.00	
	GRAINGER	12	$262.29	$3,147.48	

Cost If Installed By Contractor			
Type	Quantity	Cost Each	Total Cost
Holophane 247L	24	$200.00	$4,800.00
Holophane AVPL2	29	$200.00	$5,800.00
CREE RSWS	12	$170.00	$2,040.00
Rewire poles needing new wire	30	$240	$7,200
			$19,840.00

TRAFFIC CONTROL
CORPORATION
10435 ARGONNE WOODS DRIVE
WOODRIDGE, IL 60517
P: 630-543-1300 F: 630-543-5050

QUOTATION

Number 625051

To 10994
GLEN ELLYN, VILLAGE OF
30 S LAMBERT ROAD
GLEN ELLYN IL 60137
USA

Attn
Email
Phone 630-469-6756 **Fax** 630-469-3128

Quote Date 1/14/2019 **Expires** 4/14/2019
Terms NET 30 BASED ON APPROVED CREDIT
FOB DESTINATION-FRT INCLUDED
Salesperson ANDRE SANTOS
Email asantos@trafficcontrolcorp.com

Letting Date
Book/Call/Item
Contract No
Location
Description CREE FIXTURE

Part Number Description	Unit Price	Qty/UM	Net Price
RSWS-A-HT-3ME-5L-40K7-UL-GY-N-Q4 CREE FIXTURE	230.00	12.00 EA	2,760.00

Item Total **2,760.00**

Pricing does not include applicable sales taxes. If order is to be exempt sales tax, documentation must be provided at time of order. Additional terms may apply. Review our full Terms & Conditions of Sale at www.trafficcontrolcorp.com

U.S. COMMUNITIES
An OMNIA Partner

PROUD MEMBER OF THE:
NIGP Business Council

Graybar
works to your advantage

Serving State & Local Government, Education, Special Districts, and Non-Profits

Graybar is the awarded supplier of these materials and solutions through the U.S. Communities Program, a national purchasing cooperative that reduces the cost of goods and services by utilizing the pooled power of public agencies nationwide.

CONTRACT # EV2370

Electrical, Lighting, Data/Communication, Networking, Wireless, Security and Related MRO Supplies.

Service Solutions to Support Products

Why U.S. Communities through Graybar?

As a leading distributor of electrical, lighting, data/communications, networking, security and related MRO products, Graybar helps its customers power, network and secure their facilities with speed, intelligence and efficiency. With 290 locations across North America, Graybar is a local distributor backed by the strength of a FORTUNE 500 company with more than 148 years of experience. We believe that no other company in our industry can match our experience, stability or our reputation. Graybar's success is driven by the success of our agency customers and manufacturers. Our goal is simple. We listen to what you need, we connect you to the right solution and then we deliver on our word. It's how Graybar works to your advantage.

Satisfies Competitive Bid Process

The Graybar-U.S. Communities contracts were solicited and awarded to meet the "Joint Powers Authority" or "Cooperative Procurement Authority" via a competitive solicitation bid by a lead public agency, City of Kansas City, MO. These contracts satisfy the competitive solicitation requirement of public agencies in nearly every state. Participating public agencies invest less time and money in the procurement process, leveraging the aggregate volume of other state, local government and educational agencies nationwide.

Eligible Agencies

- State Agencies, Counties, Cities, Towns and Villages
- Specials Districts: Water, MUD's, Transportation, Airports
- Public and Private Higher Education
  - » Colleges, Universities, Technical Schools
- Public and Private K-12
  - » School Districts, Charter Schools and Other
- Non-Profits: Churches, Education, Healthcare and Other

graybar.com/uscommunities ▪ 1-800-GRAYBAR
uscommunities@graybar.com ▪ uscommunities.org

No Cost to Participate

There are no costs or spend limits to participate in the U.S. Communities program. Simply register online at uscommunities.org. Registration does not obligate you to purchase through the program, but it does introduce you to a wide range of products and services at outstanding prices.

Value Added Services

A complete and comprehensive offering of value added services to support the products included in our contract. Services may include, but not limited to: assessment, repair, renovation, installation, testing, inventory, emergency, recovery, training and other related services that may be offered through Graybar.

eCommerce – Inventory Management

Connect with Graybar through Graybar.com, private marketplaces or punch out. Graybar supports our customer's eProcurement initiatives by interfacing with a variety of ERP systems, software providers and marketplaces. We make it easy for customers to find products, place orders, check on transactions and much more — 24/7.

Imagine an inventory management system so accurate and reliable, it frees up more of your time to do what matters most. Graybar SmartStock® is the latest way we help customers be more efficient and productive.

Customer Focus

Graybar has developed an unmatched selection of value added services and solutions to support the products we distribute daily. We are committed to satisfying our customers through delivery of consistent, reliable and quality service.

Graybar Financial Services

Graybar Financial Services® (GFS) provides states, local governments and educational institutions financing for products covered in our contracts including volume purchases or projects including material and installation. Call 800-241-7408 or visit graybar.com/gfs for a low monthly quote.

Graybar U.S. Communities Program Managers

Rob Rhoads, East ▪ (202) 445-8992 ▪ *robert.rhoads@graybar.com*

Jeff Peskuski, Central ▪ (630) 640-4905 ▪ *jeff.peskuski@graybar.com*

Adam Sass, West ▪ (925) 216-2858 ▪ *adam.sass@graybar.com*

Glen Ellyn Village Board
535 Duane Street
Glen Ellyn, IL 60137

Meeting: 02/11/19 07:00 PM
Department: Public Works
Department Head: Julius Hansen
Category: Purchase
Prepared By: Julius Hansen

SCHEDULED

AGENDA ITEM (ID # 3802) DOC ID: 3802

Waive competitive bidding and approve emergency repair service by John Neri Company, in an amount not-to-exceed $24,000 and approve future repair service by John Neri Company, in an amount not-to-exceed $21,000, to be expensed to the Water & Sanitary Sewer Fund (Public Works Director Hansen)

Background

Public Works makes most emergency repairs to the water distribution system in-house. The Utilities Division is able to perform the tasks at a lower cost than a contractor and with a quicker response time to mobilize, reducing the amount of water loss. There are exceptions to this, as in some areas of town, the water main is too deep for Village equipment safely excavate (Route 53 by the DuPage River), or other tasks like snow removal may take priority, resulting in not having the staff to handle the repair of the water system.

In some years, no contractors are needed to make any repairs to the system and others require multiple calls to contractors for assistance. For instance, in 2017 a contractor repaired a break along Route 53 by the river and two other repairs required a contractor due to snow removal efforts during the 2017/18 snow season. The contractor used often depends on the ability to quickly respond to the request for help and having the proper equipment to perform the job, especially during the cold winter months.

Staff bid this work out in 2015 and selected Neri to perform this emergency//challenging repairs. Therefore, staff is not recommending going out to bid again, since we are satisfied with the service and don't feel like we would get a better price.

Subject

On Friday, January 25th, a water main break was reported at 460 Roosevelt in the early afternoon. Public Works staff was adjusted to handle both the water main break and the incoming snow, so that the repair would not require a contractor to repair. The crew attempted to repair the break but ran into equipment issues and extremely cold temperatures that resulted in a failure to complete the job. Given that staffing was already short from this first attempt and another round of snow was coming in for Saturday night, a contractor was called in to make the repair.

John Neri Construction (JNC) answered the call for assistance at 2am on Saturday morning. This company has both the equipment and personnel to respond to an emergency of this type and also understands the requirements of working on State roads. A crew was mobilized and onsite early Saturday morning. The original break was repaired, as well as a second break, a little distance west of the original shut down that surfaced mid-morning on Saturday. Two Village staff assisted the contractor to operate the water valves, provide stone backfill & repair sleeves, and set up traffic control to help minimize the costs of the jobs. JNC was successfully able to repair both breaks

before the snow arrived on Saturday evening. It is this dependable service and high level of performance that JNC is called first when an emergency occurs and Public Works needs assistance.

During the snow shift Saturday evening, a third main break was reported, this one on Glen Ellyn Place. The break was assessed by staff and being minimal water loss with no icing issues, the break was left until the next morning, after the snow event was completed. On Sunday, a Utilities crew came in, correlated the leak location and made a successful repair to the water main.

A few hours later, a fourth water main break was called in, in the parking lot next to 662 Roosevelt (PJs Camera). The water main was isolated for the night to minimize the water loss but with more snow removal needed for Sunday night into Monday, a contractor was again needed to make the repair since there was not enough staff to field a crew. John Neri Construction again answered the call on Sunday night, arranging to have a crew on site Monday morning.

Village staff again assisted the contractor, providing sleeves, parts, gravel backfill and operating valves. This situation resulted in the replacement of ~6' of pipe and installation of two repair clamps, as the first two times the water was turned back on, the main blew out again. JNC was able to perform the work as needed and was able to handle the changing situation of the multiple breaks without pause.

Budget Impact (Include Funding Source)

The two days of work total around $24,000, with the two repairs required on Saturday (1/26) making up $14,500 of that amount. Typically, there is a budgeted amount of $20,000 in the Water Fund for these types of emergency repairs, under Professional Services (50100-521055)

Strategic Plan Initiative (If Applicable)

Strategic Issue I: INFRASTRUCTURE. Invest in infrastructure to meet key needs, including downtown access, Village facilities, stormwater issues and technology improvement.

Action Requested

PW recommends approving a not to exceed amount of $45,000 for emergency repair service with John Neri Company, of which $24,000 is to cover the costs of emergency repairs already performed and $21,000 is to cover amounts for the remainder of the fiscal year 2019.

Glen Ellyn Village Board
535 Duane Street
Glen Ellyn, IL 60137

Meeting: 02/11/19 07:00 PM
Department: Public Works
Department Head: Julius Hansen
Category: Purchase
Prepared By: Julius Hansen

SCHEDULED

AGENDA ITEM (ID # 3803) DOC ID: 3803

Waive competitive bidding for a purchase which requires individual skill or expertise, which is an authorized exception in Section 1-10-2 of the Village Code and approve an amount not to exceed $45,000 to commission Max-Cast, Inc. of Kalona, Iowa to build a bronze replica of the Horse Trough built as a water fountain and refurbish the original Horse Trough, to be expensed to the Capital Projects Fund (Public Works Director Hansen)

Background

The Public Works Department is currently working on plans for a major Streetscape overhaul that has been discussed over the last few years for the entire Central Business District (CBD). This project will include utility infrastructure repairs along with new sidewalks, streets, and other features to improve the downtown. We are currently working with an engineering firm as instructed by the Village Board to design this high profile project.

One component of this plan involves the Horse Trough, which was donated to the Village in 1907 and has been an integral feature of the downtown for many years. As we look closely at the CBD in terms of Streetscape design, we would like to determine the future of the Horse Trough.

In late 2012, the Public Works department evaluated the condition of the Horse Trough and determined a much needed overhaul was required to continue to display it in the CBD. The Horse Trough was in dire need of work to prevent imminent catastrophic failure from the rust and corrosion that had developed internally and externally during many years of exposure without frequent required maintenance.

In early 2013, the Horse Trough was taken apart, sand blasted, repaired, primed and painted. During this process, a major problem was discovered. The rust and corrosion and previous repaired damage had made this cast iron piece holding the heavy large bowl structurally unsound and the Horse Trough was literally about to collapse under its own weight. That piece is stabilized now, but thought should be given to replicating to original Horse Trough.

Staff met with the Historic Preservation Commission on 1/17/19, to explore this idea with the group and it is clear they want the Horse Trough preserved and to continue to display a similar feature at its current, prominent location.

Subject

The Village needs a plan for the Horse Trough in terms of its condition and prominence in the CBD. Public Works is recommending that a replica be made of the Horse Trough. The concept was

vetted with the Historic Preservation Commission and that group agreed unanimously with the recommendation. Public Works is seeking Village Board approval for the funding to implement this recommendation. The replica would be made in bronze that would last forever as demonstrated by other monuments. The Historic Preservation Commission requested that the color remain white and that can incorporated into the specs.

In addition, Public Works is proposing the Horse Trough be made into a water fountain which is historically consistent with the original intent in 1907, as it served horses and is the same year the Glen Ellyn water system was installed. As a fountain, the bowl would fill with water and the lion heads would spout a stream of water into the bowl. In winter, the water would be shut off and it would be decorated as per tradition. The light on the top would remain in place.

The original Horse Trough is not in good enough condition to continue to be displayed as a monument much less a water fountain in a prominent location for the long term. The original Horse Trough would be refurbished again as we did for the first time in 2013 along with making a replica of the piece that is no longer structurally sound. Once completed, the original would be placed in the Historical Park as recommended by the Historical Society or at the Civic Center. Ideally, it would no longer be exposed to the elements, but at the very least it would no longer be exposed to vehicles in the intersection on Main St.and Crescent. In addition, staff will continue to work with the Historical Preservation Committee, the Historical Society, and staff on where to relocate the replica over the rest of the year.

Fortunately, we can still make a replica and have located an artist to do the job. Staff has checked a reference that was positive and provided a photo example of his work. The final plan needs to include the permanent location of the new Horse Trough if the original is moved as proposed. This can be at its current location or at one of the corners of the intersection. Either way, the entire intersection could be made more decorative to help make the Horse Trough with a water fountain an improved centerpiece of CBD Streetscape. The exact future location for the Horse Trough can be determined later, but staff is looking for direction on proceeding with producing a replica. In short, it is truly one-of-a-kind and should be preserved.

Budget Impact

The cost for a replica of the Horse Trough built as a water fountain will not exceed $40,000. It will cost an additional $5,000 for refurbishing the original. The process to make both white with a new coating that will be performed by another company to be determined and that process will cost an estimated $5,000. This purchase was not budgeted in 2019 and will be expensed to the Capital Projects Fund.

Strategic Plan

N/A

Recommendation

A motion to approve an amount not to exceed $45,000 to commission Max-Cast, Inc. of Kalona, Iowa to build a bronze replica of the Horse Trough built as a water fountain amd refurbishing the original Horse Trough.

ATTACHMENTS:

- Ordinance 6055 Horse Trough Local Landmark (PDF)
- Horse Trough corrosion damage (PDF)
- Example of work from company that can replicate the Horse Trough (PDF)
- Proposal for Glen Ellyn fountain 2-4-2019 (DOC)

RECEIVED
DEC 5 2012
VILLAGE OF GLEN ELLYN

NOT RECORDED
UNABLE TO ASSIGN PIN

Village of Glen Ellyn

Ordinance No. 6055

An Ordinance Designating the
Glen Ellyn Horse Trough Structure
as a Glen Ellyn Local Landmark

Adopted by the
President and Board of Trustees
Of the
Village of Glen Ellyn
DuPage County, Illinois
This 23rd **day of** July, **20**12.

Published in pamphlet form by the authority of the President and Board of Trustees of the Village of Glen Ellyn, DuPage County, Illinois, this 24th Day of July, 2012.

PREPARED BY AND MAIL TO:
VILLAGE OF GLEN ELLYN
ATTN: VILLAGE CLERK
535 Duane Street
Glen Ellyn, IL 60137

Ordinance No. 6055

An Ordinance Designating the Glen Ellyn Horse Trough Structure as a Glen Ellyn Local Landmark

Whereas, on May 24, 2012, the Glen Ellyn Historic Preservation Commission ("Commission") made a preliminary determination that the Glen Ellyn Horse Trough structure, located at the intersection of Main Street and Crescent Boulevard, be designated as a Glen Ellyn landmark; and

Whereas, following due notice by publication in the Daily Herald not less than fifteen (15) days nor more than thirty (30) days prior thereto, and following placement of a placard on the subject property not less than fifteen (15) days prior thereto, Glen Ellyn Historic Preservation Commission conducted a public hearing on June 28, 2012, during which evidence, testimony, and exhibits were presented in support of the request for Landmark Designation; and

Whereas, based upon the evidence, testimony, and exhibits presented at the public hearing, the Glen Ellyn Historic Preservation Commission recommended that the structure be officially designated as a historic and architectural landmark, as set forth in its Report and Recommendation dated July 17, 2012, a copy of which is appended hereto as "Exhibit A"; and

Whereas, the President and Board of Trustees of the Village of Glen Ellyn have reviewed the evidence and exhibits presented at the aforementioned public hearing and have considered the Report and Recommendation of the Glen Ellyn Historic Preservation Commission and find that the property satisfies one or more of the criteria for designation as a Glen Ellyn landmark as provided for in Section 2-13-3(A) of the Glen Ellyn Village Code;

Now, Therefore, be it Ordained by the President and Board of Trustees of the Village of Glen Ellyn, DuPage County, Illinois, in exercise of its home rule powers, as follows:

Section One: The Report and Recommendation of the Glen Ellyn Historic Preservation Commission, attached hereto as Exhibit "A", is hereby accepted, and the findings and conclusions set forth therein and in the preamble below are hereby adopted as findings of the corporate authorities of the Village of Glen Ellyn.

Section Two: The President and Board of Trustees hereby designate the Glen Ellyn Horse Trough structure, as a Glen Ellyn Local Landmark.

Section Three: The structure is hereby determined to be a Glen Ellyn Local Landmark because it satisfies the following criteria set forth in Section 2-13-3(A) of the Glen Ellyn Village Code:

A. This structure is a cast iron trough that was donated to the Village in 1907 by William Newton.

B. The structure identifies with a person or persons who significantly contributed to architectural, cultural, economic, historic, social or other aspect of the development of the Village of Glen Ellyn. William Newton was the son of Dr. Lewey Newton, the Village's first doctor. William Newton served on one of the Village's earliest Board.

C. The structure is a representation of an architectural, cultural, and social theme expressed through a distinct structure, work of art, or other object that contributes to the history of Glen Ellyn. The structure has become iconic of the heritage and history of Glen Ellyn and should be appropriate recognized.

Section Four: The determination of landmark designation is based upon the Commission's evidence, exhibits, and testimony presented at the June 28, 2012 Historic Preservation Commission public hearing including the documents listed below, which are referenced herein as though they were attached hereto, and said documents shall be filed with and made a permanent part of the records of the Glen Ellyn Historic Preservation Commission:

A. Historic Landmark Nomination Form

B. Picture of the structure along with additional information

C. Copy of the notice of the Public Hearing

Section Five: By virtue of its satisfying the criteria specified herein, the structure is hereby declared and designated as a Glen Ellyn Local Landmark.

Section Six: This grant of designation as a Glen Ellyn Local Landmark is subject to the following conditions:

A. The Village Board solely reserves the right to relocate the structure to any alternate location at any time.

B. The Village's Public Works Department reserves the right to repair, maintain, restore, or reconstruct any element or elements of the structure.

C. The Village in its own determination reserves the right to dispose of the Horse Trough if it is irreparably damaged.

Section Seven: The Historic Preservation Commission is authorized and directed to send a certified copy of this Ordinance and a summary report of the effects of designation to the owners within ten (10) days of the passage of this Ordinance, and the Village Clerk is authorized and directed to file or cause to be filed a certified copy of this Ordinance with the DuPage County Recorder of Deeds, Milton Township Assessor, and appropriate Village departments.

Section Eight: The provisions and sections of this Ordinance shall be deemed to be separable, and the invalidity of any portion of this Ordinance shall not affect the validity of the remainder.

Section Nine: This Ordinance shall be in full force and effect from and after its passage, approval, and publication in the manner provided by law.

Passed by the President and Board of Trustees of the Village of Glen Ellyn, Illinois, this 23 day of July, 2012, on first reading, second reading not being requested.

Ayes: Cooper, Friedberg, Hartweg, Henninger, Ladesic, McGinley

Nays: - 0 -

Absent: - 0 -

Approved by the Village President of the Village of Glen Ellyn, Illinois, this 23 day of July, 2012

Village President of the Village
of Glen Ellyn, Illinois

Attest:

Patricia A. Underhill
Village Clerk of the Village (acting)
of Glen Ellyn, Illinois

(Published in pamphlet form and posted on the 24th day of July 2012.)

X:\Admin\HistCommission\Landmarks\Horse Trough\Ordinance.doc

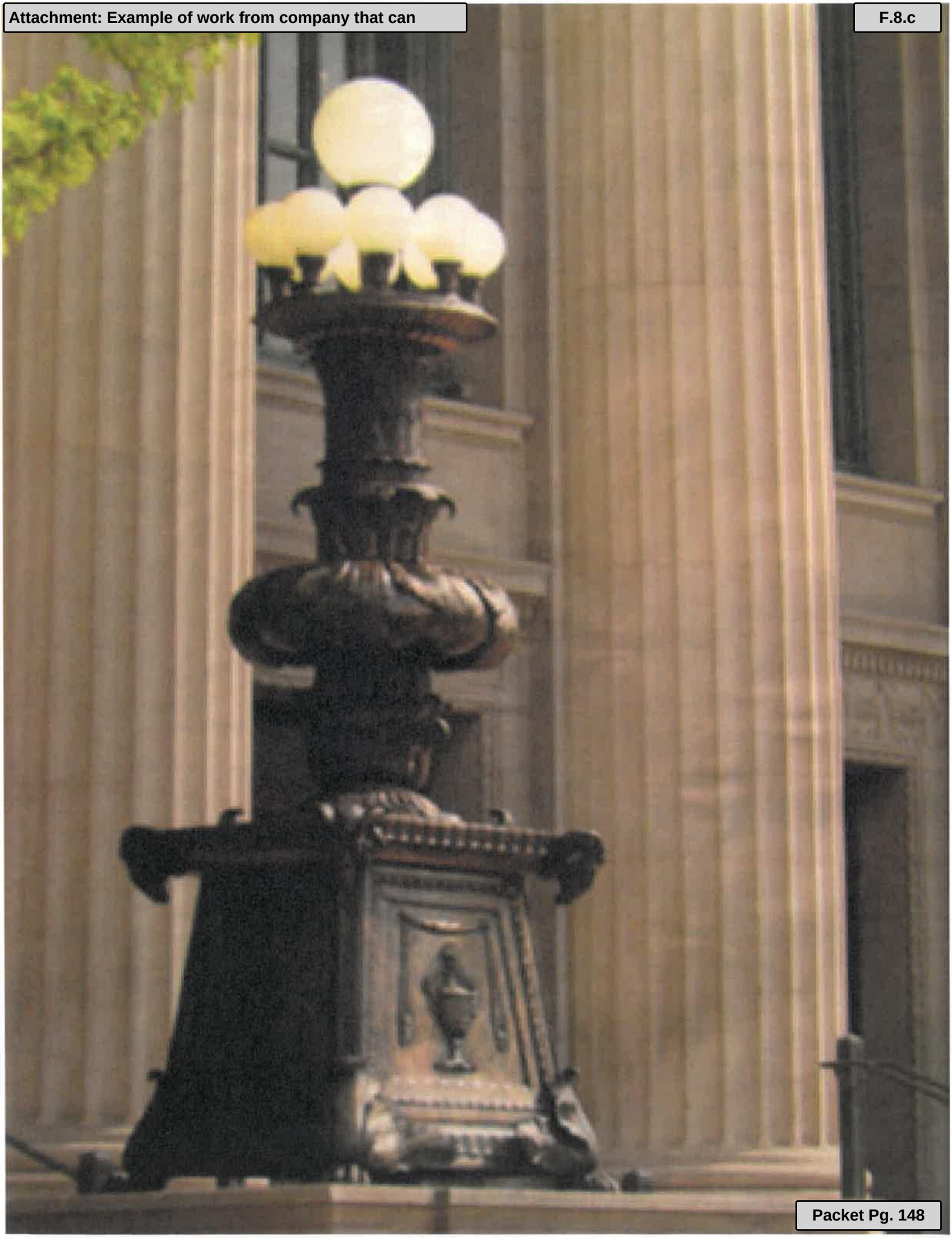

MAX-CAST, INC®

α *A fine arts foundry* α

611 B Avenue Kalona, IA 52247

tel.319-656-5365

Website: www.max-cast.com email: max-cast@kctc.net

PROPOSAL FOR CREATING A BRONZE REPLICA OF GLEN ELLYN'S HISTORIC HORSE TROUGH/FOUNTAIN

Using the original cast iron horse trough for a pattern, MAX-CAST will sand mold and cast in bronze a full size replica. The silicone bronze we use (C873) is as tough as mild steel but very corrosion resistant. It was developed in the 1920s for valves in chemical plants and is used today for marine hardware and sculpture casting.

The job would take three to four months once the sandblasted original is delivered to us here in Kalona, Iowa. We would fill in any pits and remove any excess sand texture to make the original suitable for a pattern. We would plumb the lion heads so that they could be used as fountain spouts and insure that the trough would hold water without leaking.

MAX-CAST would work closely with the representatives of the Village of Glen Ellyn to be sure we are producing what is desired. We guarantee all materials and workmanship to be free of defects and will rectify any flaws. We will provide instructions for the maintenance of the bronze trough and will be happy to assist in its installation if need be.

MAX-CAST warrants that its employees are adequately insured for injury and that the original horse trough will be insured while it is in our facility. The risk of loss or damage to the bronze replica will be borne by the foundry while in MAX-CAST's possession.

MAX-CAST will perform all work as independent contractors and not as employees of the Village of Glen Ellyn.

The bronze replication of the historic horse trough/fountain will be done for a not to exceed amount of $40,000 FOB Kalona, Iowa.

Stephen Maxon, President MAX-CAST, Inc. **February 4, 2019**

Glen Ellyn Village Board
535 Duane Street
Glen Ellyn, IL 60137

Meeting: 02/11/19 07:00 PM
Department: Public Works
Department Head: Julius Hansen
Category: Resolution
Prepared By: Rich Daubert

SCHEDULED

RESOLUTION 19-03

DOC ID: 3806

Resolution No. 19-03, A Resolution Adopting the Village of Glen Ellyn Complete Streets Policy (Public Works Director Hansen)

Background

Staff and the Village's Capital Improvements Commission are recommending the Village's adoption of a Complete Streets Policy to commemorate, document, and ensure the Village's continued commitment to accommodating all users of the Village's surface transportation network.

As defined by the National Complete Streets Coalition (NCSC), Complete Streets is "a transportation approach that ensures all future street projects will take into account the needs of all travelers, regardless of age, ability, or mode of transportation."

The Village has, and continues, to incorporate Complete Streets into its transportation projects where deemed appropriate. Some of the more recent initiatives include:

- Repair and Accessible Upgrades to Sidewalks
- Construction of New Sidewalks
- Construction of Traffic Lanes Sufficient in Width for Bicycles and Vehicles
- Paving/Resurfacing of the Illinois Prairie Path where heavily used by Pedestrians
- Construction of Grade-Separated Pedestrian Crossing of UP-West Line at Taylor Avenue
- Support for the East Branch DuPage River Trail Project
- Phase I Study and Grant Application for Train Station/Pedestrian Tunnel Project in CBD

As an ancillary benefit, having such a policy demonstrates that the Village is aligned with the Chicago Metropolitan Agency for Planning's long range vision and will help the Village in the pursuit of certain grant opportunities for capital projects. More specifically, the upcoming Surface Transportation Program and Congestion Mitigation Air Quality Program considers Complete Streets Policies as well as their incorporation into a project seeking funding as important. Points are specifically assigned for both having a policy as well as incorporating it into the project seeking funding.

It is important to note that this policy does not mandate the incorporation of improvements. Village Staff and the Capital Improvements Commission consider not only the positive benefits of incorporating complete streets but also the impacts on the environment (for example, trees), impacts on land use (such as use of driveways), scope of the project (resurfacing for example is not an appropriate time to widen a street for a shared bike/vehicle lane), whether there already are appropriate accommodations for all users, and cost of incorporating the potential complete streets improvements.

Subject

Mechanisms for adopting a policy include the use of an Ordinance, Resolution, or Plan. As noted by CMAP, "Local governments should identify the type of policy that would be most effective in sparking change, while still being realistic about the type of policy that can be passed and implemented successfully." Based on Staff and the Capital Improvements Commission review, adoption of a Resolution is recommended as the most contextually appropriate mechanism for the Village to consider.

The NCSC suggests that a comprehensive complete streets policy includes the following elements:

1. Vision for how and why the community wants complete streets
2. Statement that the policy applies to all users and modes of transportation
3. How the policy is implemented into various projects
4. Clear definition of exceptions to complete streets elements
5. How the policy creates an integrated network of transportation modes
6. How the plan involves multiple jurisdictions
7. What sort of design guidelines the policy references (AASHTO, MUTCD, ADA, IDOT, Metra).
8. How the policy is sensitive to the community context
9. Performance measures
10. Implementation and next steps

The Capital Improvements Commission (CIC) reviewed and discussed the potential adoption of a Complete Streets Resolution incorporating the above elements. The matter was reviewed by the CIC at its October 9 and December 11, 2018 meetings. The CIC ultimately unanimously recommended the adoption of a Complete Streets Resolution, subject to Village Attorney Review, at its December 11, 2018 Meeting. The minutes from both meeting are attached hereto for reference. Please note that the December Meeting Minutes are in draft form given that the Commission did not meet in January and has yet to formally approve them. The most current form of the Resolution is attached hereto for the Village Board's consideration.

Budget Impact

The adoption of this resolution in of itself, does not have any impacts on the Village's Budget. Furthermore, this resolution does not mandate that Complete Streets are incorporated into all projects. Rather, finances are one of several considerations as to whether or not Complete Streets improvements can be incorporated into a given project.

Strategic Plan Initiative

The adoption of this policy supports the following Village of Glen Ellyn Strategic Initiative Issue:

> Strategic Issue I: INFRASTRUCTURE. Invest in infrastructure to meet key needs, including downtown accessibility, Village facilities, utilities and technology improvement.

Action Requested

Staff recommends the following motion be made by the Village Board of Trustees at the February 11, 2019 Village Board Meeting:

1. Motion to approve Resolution No. 19-XX, A Resolution Adopting the Village of Glen Ellyn Complete Streets Policy

List of Attachments

CIC Meeting Minutes October 9, 2018 - Final
CIC Meeting Minutes December 11, 2018 - Draft
Resolution Adopting the Village of Glen Ellyn Complete Streets Policy

Village of Glen Ellyn

Resolution No. 19-03

A Resolution Adopting the Village of Glen Ellyn Complete Streets Policy

Whereas, The National Complete Streets Coalition defines Complete Streets as a transportation approach that ensures all future street projects will take into account the needs of all travelers, regardless of age, ability, or mode of transportation; and

Whereas, Complete Streets are designed to improve mobility, access, and connectivity for persons traveling by all modes; and

Whereas, Developing Complete Streets as part of transportation projects shall be treated as an opportunity to offer improvements in access and connectivity by all modes of travel to and from Glen Ellyn's services, businesses, neighborhoods, schools, parks, trails, and adjoining communities; and

Whereas, Glen Ellyn is a key destination and connection point on the Illinois Prairie Path, Great Western Trail, and Union Pacific Railroad West-Line, all of which encourages local development, promotes healthy lifestyles, and brings many visitors to Glen Ellyn by foot, bicycle, train, car, and bus; and

Whereas, the Village of Glen Ellyn already practices the incorporation of Complete Streets into its transportation projects, where appropriate and taking all factors into consideration, including the construction of accessible sidewalks, traffic lanes sufficient in width for simultaneous use by bicycles and vehicles, dedicated bicycle lanes on Village roadways, improvements to the Illinois Prairie Path such as paving where the facility is heavily used by commuters and patrons of the Central Business District, construction of grade-separated crossings of the UP-West line such as at Taylor Avenue, support for new trail projects such as the East Branch DuPage River trail project, studies for potential future projects which support Complete Streets such as the Glen Ellyn Metra Train Station project, and continued investments in maintaining the Village's already vast multi-modal transportation facilities; and

Whereas, the President and the Board of Trustees of the Village of Glen Ellyn believe and hereby declare that it is in the best interests of the Village and its residents to commemorate its commitment to Complete Streets by formally adopting a Complete Streets Policy to ensure the Community's continued support of Complete Streets.

NOW THEREFORE, BE IT RESOLVED BY THE PRESIDENT AND BOARD OF TRUSTEES OF THE VILLAGE OF GLEN ELLYN, DUPAGE COUNTY, ILLINOIS, in exercise of its home rule authority, as follows:

Section One, Complete Streets Policy: This Complete Streets Policy shall direct the Village of Glen Ellyn to continue to provide a safe, accessible, well-connected, and visually attractive surface transportation network that balances the needs of all users including: motorists, pedestrians, bicyclists, public transportation riders and drivers, emergency vehicles and promote a more livable

community for people of all ages and abilities, including children, youth, families, older adults, including those with disabilities.

Section Two, Purpose: This policy is intended to ensure that all planning, scoping, programming, design, right-of-way acquisition, construction, construction engineering, reconstruction, operation and maintenance activities for surface transportation projects take all potential users of the Village's transportation network into consideration. It is important to note that this policy is not intended to mandate that complete streets be incorporated into every project; rather, that complete streets improvements are considered as part of projects where the Village determines incorporation of the improvements is permissible, practical, feasible, financially viable, and consistent with other Village policies and plans. This policy is also intended to encourage walking and biking, producing the health benefits that result from these types of activities, help reduce the demand for fossil fuels, ease traffic congestion, reduce wear on roadways, improve air quality and make streets and public and private spaces more attractive for businesses and customers and increase economic activity.

Section Three, Projects: The Village of Glen Ellyn shall approach every transportation facility related improvement and project phase as a potential opportunity to create safer and more accessible streets for all users. These phases include, but are not limited: planning, scoping, programming, design, right-of-way acquisition, construction, construction engineering, reconstruction, operation, and maintenance. It is understood that maintenance activities do not necessarily trigger requirements for major street improvements that would be required to incorporate Complete Streets and should not be expected to do so. However, maintenance activities do present some opportunities that can improve the environment for other transportation network users. Complete Streets principles will be applied on Village projects, incrementally over time.

Maximum financial flexibility is important to implement Complete Streets principles. All sources of transportation funding, public and private, should be considered as available, to implement Complete Streets within the Village of Glen Ellyn.

Section Four, Exceptions: As noted in Section Two, the intent of the Policy is not to mandate the incorporation of Complete Streets with facilities such as sidewalks, bike lanes, shared lanes, grade-separated pedestrian crossings, and other Complete Streets improvements provided within all projects. However, the Village shall consider the incorporation of the aforementioned types of improvements within projects. As part of its consideration, the following are some, but not all, of the exceptions to incorporating Complete Streets within a given project:

1. An affected roadway prohibits by law the use by pedestrians and bicyclists (such as state & federal limited-access highways) in which case a greater effort shall be made to accommodate those specified users elsewhere, including on roadways that cross or otherwise intersect with the affected roadway.
2. The costs of providing accommodation for some travel modes are excessively disproportionate to the need or probable use by those modes.
3. Where the construction is not practically feasible or cost effective because of unreasonable adverse impacts on the environment or on neighboring land uses including impact from right-of-way acquisition.
4. There is a reasonable and equivalent accommodation along the same corridor, effectively serving the same destinations and providing the same access and mobility, which is already programmed to provide facilities, therefore exempting the project at hand.
5. The project scope precludes the practical and cost-effective incorporation of complete streets.

6. The incorporation of complete streets would violate another Village, County, State, or Federal policy.

Section Five, Integrated Network of Transportation Modes: The Village of Glen Ellyn Complete Streets Policy shall support creating integrated networks of transportation modes. The needs, design guidelines, and context of transportation facilities will be taken into consideration to support the ability of users to walk, drive, and utilize the available transit modes of transportation to travel in Glen Ellyn.

Section Six, Multi-Jurisdictional Involvement: The Village of Glen Ellyn Complete Streets Policy shall involve multiple jurisdictions by pursuing and incorporating Complete Streets within rights-of-way owned and maintained not only by the Village but also by the State of Illinois, DuPage County, and Union Pacific Railroad. Examples include, but are not limited to, constructing improvements such as multi-use paths and sidewalks within the aforementioned agencies' rights-of-way, pursuing improvements to the Glen Ellyn Metra Train Station, and supporting the construction of a recreational trail along the East Branch of the DuPage River.

Section Seven, Design Guidelines: The Village of Glen Ellyn shall follow accepted or adopted design standards and use the best and latest design standards available, including but not limited to, existing design guidance from: Illinois Department of Transportation, American Association of State Highway and Transportation Officials, Federal Highway Administration, the Institute of Transportation Engineers, National Association of City Transportation Officials, the Americans with Disabilities Act, the Public Right-of-Way Accessibility Guidelines, and the Active Transportation Alliance. In recognition of various contexts and public input, a flexible, innovative and balanced approach that follows other appropriate design standards may be considered, provided that a comparable level of safety for all users is present.

Section Eight, Context: The Village of Glen Ellyn shall implement Complete Streets solutions in a manner that is sensitive to the local context and character, aligns transportation and land use goals and recognizes that the needs of users may vary throughout the community.

Section Nine, Performance Measures: The Village of Glen Ellyn shall measure the success of this Complete Streets policy using, but not limited to, the following criteria:

1. Linear feet of pedestrian accommodations built along Village streets, where no such accommodations currently exist.
2. Miles of bike accommodations built or marked where no such accommodations exist.
3. Number of crosswalk/sidewalk ramp locations improved where deficiencies exist.
4. Square feet of sidewalk rehabilitated/improved where deficiencies exist.
5. Incorporation of improvement into the Metra Train Station.

Section Ten, Implementation and Next Steps: To implement this Complete Streets Policy, the Village of Glen Ellyn will:

1. Continue to review all roadway projects, public and private developments and other opportunities to ensure Complete Streets are incorporated into projects as applicable. Review and the overall implementation of this policy shall be the responsibility of the Village's Professional Engineering Staff with input and direction from the Village's Capital Improvements Commission and Village Board sought as necessary.
2. Continue to ensure that the Village's Capital Plan supports implementation of the Complete Streets Policy with applicable Capital Projects.
3. Encourage staff professional development and training in areas that related to Complete Streets such as ADA/Public Right-of-Way Accessibility Guidelines, Active Transportation,

Transit Oriented Development, Traffic Engineering, and other applicable subjects that relate to Complete Streets.

4. Continue to implement and monitor the effectiveness of this policy and make adjustments as necessary to ensure the Village's objectives for supporting Complete Streets are met.
5. Continue to pursue funding for improvement the Glen Ellyn Metra Train Station including the incorporation of a grade-separated pedestrian crossing of the Union Pacific West Railroad Line.

Section Eleven: This Resolution shall be in full force and effect from and after its passage and approval.

Passed by the President and Board of Trustees of the Village of Glen Ellyn, Illinois this _____ day of _____

Ayes		Diane McGinley		Pete Ladesic		Mark Senak
		Craig Pryde		Bill Enright		Gary Fasules
		John Kenwood				
Nayes		Diane McGinley		Pete Ladesic		Mark Senak
		Craig Pryde		Bill Enright		Gary Fasules
		John Kenwood				
Absent		Diane McGinley		Pete Ladesic		Mark Senak
		Craig Pryde		Bill Enright		Gary Fasules
		John Kenwood				

Approved by the Village President of the Village of Glen Ellyn, Illinois this _____ day of _____.

_____

Diane McGinley, Village President

Attest:

_____

Village Clerk

AFFIX VILLAGE SEAL

(Published in pamphlet form and posted on the _____ day of _____, 20____.)

ATTACHMENTS:

- CIC Meeting Minutes October 9 2018 - Final (PDF)
- CIC Meeting Minutes December 11 2018 - Draft (PDF)

Village of Glen Ellyn

Minutes
Village of Glen Ellyn
Capital Improvements
Regular Meeting
October 9, 2018
7:00 PM
Glen Ellyn Civic Center, Room 301

Board or Commission:	Capital Improvement	**Date:**	Oct 9, 2018
Meeting:	Regular	**Called to Order:**	7:00 p.m.
Quorum:	Yes	**Adjourned:**	8:35 p.m.

MEMBER ATTENDANCE:

Michael T. Lane	Chairman	Present
Adam B. Biggam	Commissioner	Absent
Joshua J. Cattero	Commissioner	Present
Arthur F. Foerster	Commissioner	Present
Eric V. Kumar	Commissioner	Absent
Michael M. Lindquist	Commissioner	Present
Todd H. Ryne	Commissioner	Present
Steve Szymanski	Commissioner	Present
Rocco J. Zucchero	Commissioner	Present
Richard Daubert	Professional Engineer	Present
Tom Topor	Senior Civil Engineer	Absent
Also Present:		
Steve Werner	Engineer	Absent
John Kenwood	Liaison Trustee	Present
Julius Hansen	Director of Public Works	Present
Public Present:		
Walter Liptak	685 Duane Street Glen Ellyn Resident	
Bonnie Liptak	685 Duane Street Glen Ellyn Resident	

A. CALL TO ORDER

The October 9, 2018 regular meeting of the Capital Improvements Commission was called to order at 7:00 PM at the Glen Ellyn Civic Center.

B. PUBLIC COMMENT – Walter & Bonnie Liptak, 13 year Glen Ellyn residents residing at 685 Duane Street, seek assistance from the CIC to resolve an ongoing flooding issue on their property which they believe may become worse as their neighbor at 681 Duane will begin construction on their property. They are asking the CIC to help them address the flooding issue with the builder of the 681 Duane street property so that something can be done during the building stage of the house to fix the storm water problem. The Liptaks also believe this to be a public safety concern should the water overflow ice over onto the sidewalk. Engineer Daubert will speak with Ray in storm water management to see if there is anything that can be done. He also suggests that the Liptaks contact the owner of the property and perhaps they can come up with a solution with the builder. Director Hansen adds that he, Engineer Daubert and Ray from Storm water management will speak with the builder to help facilitate the drainage.

C. APPROVAL OF MINUTES FROM September 11, 2018 MEETING – Approved

MOVE TO APPROVE MINUTES OF REGULAR MEETING FROM 9/11/2018

RESULT: Motion Unanimously Carried

MOVER: Commissioner Foerster

SECONDER: Commissioner Lindquist

D. CURRENT PROJECT DISCUSSIONS

1. *Adoption of Complete Streets Policy (CSP) for Central Business District.* Engineer Daubert asks the CIC for their input on a Complete Streets Policy. The CSP would be a valuable blueprint we would look at for every street. Chairman Lane asks will there be leeway to make adjustments to the criteria on a street by street basis with this policy? The CIC agrees that this policy should be a consideration on a street by street basis. Commissioner Zucchero states we want to accommodate any user of the downtown area and we want to be ADA compliant. Director Hansen adds if we want to have safer sidewalks and be ADA compliant then we have to change our parking, and street parking will not be the driving force as it has been in the past. Commissioner Cattero adds we need to prioritize for pedestrians and also consider any crosswalks without stop signs. No one stops, so we would need to put stop or yield signs at these crosswalks. Director Hansen adds we don't have enough handicap parking spots so we need to consider that as well. Chairman Lane adds that we need to think 20 years out. I believe we will have fewer cars so we need to make it more pedestrian friendly and less reliance

on cars. Commissioner Lindquist adds we will need wider sidewalks to accommodate outdoor seating. Engineer Daubert adds bike lanes may be something we want to consider also. Chairman Lane asks Engineer Daubert to take all of the CIC's recommendations for the Complete Street Policy and put together a resolution for our November meeting. He would also like to see more public input so we can accommodate all needs.

E. TRUSTEE'S REPORT – Trustee Kenwood reports that the Food and Beverage Tax passed and will go into effect March 2019. The tax is 1-1/2% anywhere you go to sit and eat as well as packaged liquor goods. The beverage tax will also include Reserve 22. Budgets are being reviewed; we have one more session on Monday. Geische project is moving forward nicely. Pete's Fresh Market is scheduled to open spring 2019.

F. OTHER BUSINESS – Commissioner Foerster reports that people are asking why there aren't more stop signs on Bryant north of Hill. Engineer Daubert responds that there is specific criteria for adding stop signs (i.e. traffic volume, sight distance, and accident history). Stop signs are not to be used to control speed. He suggests that if there is a need for a stop sign contact the police department as they handle such requests.

G. PUBLIC WORKS REPORT – No report.

H. PROJECT REPORT – *October 5, 2018 Monthly Construction Report* (see attached report) Engineer Daubert reports that Taylor Ave/Pedestrian tunnel is going well. The installation of sheeting is almost done. Oct 26th is when tunneling will start from 10:00pm through Sunday when there is less commuter traffic. It is still scheduled to be done by the end of the year. Steve Werner is working on the sidewalk removal and replacement project. CBD streetscape is underway. We are doing public outreach on October 24th to get the community together to talk about various projects. November 1st we will be walking the CBD with the steering committee of this project. The Train Station project is looking for grants. CDM Smith will work on the shared fund grant application which is due in March. Hopefully we will get a good amount of funds for this project. Commissioner Szymanski asks if there is any news on the turning lane on Roosevelt road by Baker Hill. Engineer Daubert said we did ask IDOT about this and it usually takes 3 or 4 months to hear back on.

I. Adjournment – A motion to adjourn the meeting was made by Commissioner Szymanski and Commissioner Zucchero seconded the motion. The meeting was adjourned at 8:35 p.m.

Submitted by Elisa Pollina, Recording Secretary

Reviewed by Richard Daubert

Village of Glen Ellyn

Minutes
Village of Glen Ellyn
Capital Improvements
Regular Meeting
December 11, 2018
7:00 PM
Glen Ellyn Civic Center, Room 301

Board or Commission:	Capital Improvement	**Date:**	Dec 11, 2018
Meeting:	Regular	**Called to Order:**	7:03 p.m.
Quorum:	Yes	**Adjourned:**	8:35 p.m.

MEMBER ATTENDANCE:

Michael T. Lane	Chairman	Absent
Adam B. Biggam	Commissioner	Present
Joshua J. Cattero	Commissioner	Present
Arthur F. Foerster	Commissioner	Present
Michael M. Lindquist	Commissioner	Present
Todd H. Ryne	Commissioner	Absent
Steve Szymanski	Commissioner	Present
Rocco J. Zucchero	Commissioner	Absent
Richard Daubert	Professional Engineer	Present
Tom Topor	Senior Civil Engineer	Present
Also Present:		
Steve Warner	Engineer	Absent
John Kenwood	Liaison Trustee	Present
Julius Hansen	Director of Public Works	Present

Public Present:

DRAFT

A. CALL TO ORDER

A motion was made by Commissioner Biggam to appoint Commissioner Lindquist as acting Chairman for tonight's meeting and Commissioner Cattero seconded the motion. The December 11, 2018 regular meeting of the Capital Improvements Commission was called to order at 7:03 PM at the Glen Ellyn Civic Center.

B. PUBLIC COMMENT – None

C. APPROVAL OF MINUTES FROM October 9, 2018 MEETING – Approved

MOVE TO APPROVE MINUTES OF REGULAR MEETING FROM 10/9/2018

RESULT: Motion Unanimously Carried

MOVER: Commissioner Biggam

SECONDER: Commissioner Cattero

D. CURRENT PROJECT DISCUSSIONS

1. *Adoption of Complete Streets Policy (CSP) for Central Business District.* Engineer Daubert asks the CIC for their input on a Complete Streets Policy so a resolution can be voted on. Commissioner Lindquist adds he thought everything that was discussed at the last meeting was included in the policy. Commissioner Foerster adds he thought the policy was well written but suggests letting the Village attorney review it, especially with regard to the exceptions page (section 4). Engineer Daubert adds he will give the CSP to the Village attorney for a final review.

   Commissioner Biggam motions to accept the resolution of the Complete Streets Policy as written subject to Village Attorney review. Commissioner Szymanski seconded the motion.

MOVE TO APPROVE THE CSP RESOLUTION

RESULT: Motion Unanimously Carried

MOVER: Commissioner Biggam

SECONDER: Commissioner Szymanski

DRAFT

E. TRUSTEE'S REPORT – Trustee Kenwood reports that the Apex Project (Giesche) has a meeting scheduled in early January. The Nobel House will be getting their liquor license this week. CVS is now open. Pedestrian Tunnel on Taylor Street will be wrapping up by the end of the year. The board did vote on the bonds for the parking garage. More bonds will be voted on once the new board is sworn in.

F. OTHER BUSINESS – None

G. PUBLIC WORKS REPORT – Director Hansen reports that there was a lot of damage from the snow storm. The village approved a special brush pickup up to $25,000. This was unbudgeted. The brush pickup took 5 days to complete, normally this takes 4 days. Once the contractor hits $25,000, Public Works will take over the rest of the pickup.

H. PROJECT REPORT – *December 11, 2018 Monthly Construction Report* (see attached report) Engineer Daubert reports that Park Blvd has been completed and the street is now open. Engineer Daubert gave a Construction Project Update presentation on the Taylor Ave/Pedestrian tunnel (see attached report). He adds the completion of this project is on track for 12/31/18. There are some items of this project that will be completed in the spring. Those items include: parkway restoration with sod, staining of concrete headwalls and any punch list items that come up.

Engineer Topar reports that the CBD streetscape project's first phase of the design work is underway. The topographical survey is close to being done. A Public outreach campaign is underway. We've had 3 meetings so far.

Commissioner Szymanski reports on the CBD Streetscape and Utility Improvements Steering Committee Report (see attached). The CBD steering committee is comprised of about 25 people that include business people, engineers, board and commission members and residents. It is a good cross section of people. The steering committee took a walking tour around the CBD with clipboards in hand taking notes and giving feedback on how the downtown should look and what we need to consider. The horse trough island location is where many were divided on. Two people on the committee mentioned to keep the trough where it is; five people want it moved to a new location. The group agreed we would like to keep the horse trough island. Director Hansen adds that we spoke with the design team and we want them to take extra care and time with this intersection to make it better than it is now. It is the trademark of the downtown area. Commissioner Szymanski adds there will be a meeting January on a Saturday morning to go through the design phase. The design team has created a website called DowntownGE.com for educating people on the project as well as sharing ideas for improving the downtown streets. Engineer Daubert adds, we are also going to consider past plan recommendations to see if there are some items that may still be applicable. It will be a good guide to build from. Engineer Daubert asks the CIC to attend the design phase meeting in January. Once he receives the date of the meeting he will forward it on to the CIC. Director Hansen asks the CIC if they see anything in other towns while they are out and about that may work for our project to please forward that information on.

DRAFT

I. **Adjournment –** A motion to adjourn the meeting was made by Commissioner Lindquist and Commissioner Foerster seconded the motion. The meeting was adjourned at 8:35 p.m.

Submitted by Elisa Pollina, Recording Secretary

Reviewed by Richard Daubert

DRAFT

Glen Ellyn Village Board
535 Duane Street
Glen Ellyn, IL 60137

Meeting: 02/11/19 07:00 PM
Department: Planning & Development
Department Head: Staci Springer
Category: Ordinance
Prepared By: John Sterrett

SCHEDULED

ORDINANCE 6673 DOC ID: 3805

Ordinance No. 6673, An Ordinance Approving a Special Use Permit, Variations from the Zoning Code, and Variations from the Sign Code for the Construction and Operation of a Raising Cane's Chicken Fingers Restaurant with a Drive-thru Proposed on Property Commonly Known as 495-499 Roosevelt Road

Background: Raising Cane's Restaurant, LLC, lessee of the property located at 495-499 Roosevelt Road, is requesting approval of a Special Use Permit, Variations from the Zoning Code and Variations from the Sign Code to construct and operate a Raising Cane's Chicken Fingers restaurant with a drive-thru at the subject property located at the southwest corner of Roosevelt Road and Main Street, commonly known as 495-499 Roosevelt Road, in the C3 Service Commercial District. The petitioner plans to consolidate the two subject parcels and demolish two existing vacant buildings located on the parcels to make room for a new drive-thru restaurant facility.

In order to accommodate the project, the petitioner is specifically requesting approval of the following:

1. A Special Use Permit for a drive-in commercial facility (drive-thru restaurant) in accordance with Section 10-4-15(B)9 of the Zoning Code.

2. The following variations from the Glen Ellyn Zoning Code:

    a. A variation from Section 10-5-8(I) of the Zoning Code to allow for a 10' drive-thru aisle in lieu of the minimum required 12' drive-thru aisle.

    b. A variation from Section 10-5-5(C)1 of the Zoning Code to allow for an impervious surface setback of 4.5' along the west property line in lieu of the minimum required impervious surface setback of 8.3'.

    c. A variation from Section 10-4-15(G)15 of the Zoning Code to provide 33 parking spaces in lieu of the 34 parking spaces required.

3. The following variations from the Glen Ellyn Sign Code:

    a. A variation from Section 4-5-10(A) of the Sign Code to allow 4 signs in lieu of 3 sign permitted for a corner lot.

    b. A variation from Section 4-5-10(A) of the Sign Code to allow for a total combined area of all signs to be 185 square feet in lieu of the maximum 150 square feet permitted on a corner lot.

    c. A variation from Section 4-5-10(A) of the Sign Code to allow a wall sign to have a surface area of 67.52 square feet in lieu of the maximum 46 square feet permitted for a wall sign.

    d. A variation from Section 4-5-10(A)2 of the Sign Code to allow a freestanding sign to have

a surface area of 56 square feet in lieu of the maximum 50 square feet permitted.

4. Exterior Appearance Approval in accordance with Ordinance No. 5508.

The restaurant will have 101 indoor seats requiring a minimum of 34 parking spaces. The Petitioner is proposing to provide 33 parking spaces and has requested a variation in lieu of providing the required number of parking spaces. Staff finds this request to be reasonable and has no issues with the reduction of 1 parking space. The spaces will meet all required dimensions. As a restaurant use under 5,000 square feet, no loading space is required. Landscape islands are proposed to break up the parking rows in accordance with the Zoning Code.

As part of the development of the entire site a proposed right-in-right-out access on Roosevelt Road has been approved by IDOT in concept. The Plan Commission may wish to consider placing a condition requiring final approval of the proposed access from IDOT prior to the issuance of a building permit to construct the building, including the foundation. An existing full access drive is located along the southern property line for Taft Avenue. A cross access between the subject property and the adjacent property to the west has also been proposed.

Drive-Thru: The use of a drive-thru requires a Special Use Permit. The drive-thru will have one lane that wraps around the building with the ordering boards located to the south of the building and the entrance to the drive-thru lane being located approximately 60 feet away from the Roosevelt Road access. The drive-thru lane will accommodate a total of 10 stacked vehicles to satisfy the minimum 5 stacking spaces required.

The petitioner is seeking a variation to allow for a 10 foot drive aisle in lieu of the required 12 foot drive aisle. This is a common variation that has been approved by the Village Board in the past. Considering the slow speeds at which patrons drive through the drive thru lane, staff believes that this variation will not create a health and safety hazard.

Streetscape: In accordance with the Village's Streetscape Plan, the petitioner is proposing to replace the existing landscape wall, which has fallen into disrepair, located on the northeast corner of the property and install additional landscaping in this area. This installation will complement, and be similar to, the streetscape improvements located at the corners of the three other properties around the Roosevelt Road and Main Street intersection.

Exterior Appearance Recommendation: Staff has reviewed the request for Exterior Appearance for the proposed building and found the design and building materials to be in substantial conformance with the Appearance Review Guidelines and further recommends approval of the Exterior Appearance for the project.

Plan Commission Recommendation: The Plan Commission considered the petitioner's applications for approval of the Special Use Permit, Variations from the Zoning Code, and Variations from the Sign Code at a public hearing on January 24, 2019. No members of the public spoke at the hearing either in favor of or in opposition to the requests. By a vote of five (5) "yes" and zero (0) "no", the Plan Commission recommended approval of the Special Use Permit,

Variations from the Zoning Code, and Variations from the Sign Code with the following conditions:

1. Final IDOT approval of the proposed RI/RO access shall be obtained prior to the issuance of a building permit for construction of the building including the foundation work.

2. The Plat of Consolidation shall be finalized and recorded prior to the issuance of a building permit for construction of the building including the foundation work.

3. Outstanding items contained in the Public Works memo prepared by Rich Daubert, P.E. dated October 26, 2018 shall be addressed at the time of the building permit submission.

4. If any rooftop units, after installation, are still visible from the adjacent rights-of-way of Main Street, Roosevelt Road, or Taft Avenue, then additional screening shall be installed to fully screen these units.

Village Board Action: The Village Board may approve, approve with conditions or deny the request for approval of a Special Use Permit, Variations from the Zoning Code, Variation from the Sign Code, and Exterior Appearance. A draft Ordinance approving the requests with the conditions recommended by the Plan Commission is attached for consideration at the February 11, 2019 Village Board meeting.

Attachments:
- Draft Ordinance
- Location Map
- Draft Plan Commission Meeting Minutes-January 24, 2019 – Exhibit "A"
- Site Plan – Exhibit "B"
- Landscape Plan – Exhibit "C"
- Building Elevations – Exhibit "D"
- Sign Elevations – Exhibit "E"
- Photometric Plan – Exhibit "F"
- Public Works memo prepared by Rich Daubert, P.E. dated October 26, 2018
- Select Materials from the Petitioner's Application Packet

CC: LuAron McCormack, Raising Cain's Chicken Fingers

Village of Glen Ellyn

Ordinance No. 6673

An Ordinance Approving
A Special Use Permit, Variations from the Zoning Code,
Variations from the Sign Code and the Exterior Appearance
For the Construction and Operation of a
Raising Cane's Chicken Fingers Restaurant with a Drive-thru
Proposed on Property Commonly Known as 495-499 Roosevelt Road
Glen Ellyn, Illinois 60137

Adopted by the
President and the Board of Trustees
Of the Village of Glen Ellyn
DuPage County, Illinois
This _____ Day of _____, 20__.

Published in pamphlet form by the authority
of the President and Board of Trustees of the
Village of Glen Ellyn, DuPage County, Illinois,
this _____ day of _____, 20____.

PREPARED BY AND MAIL TO:
VILLAGE OF GLEN ELLYN
ATTN: VILLAGE CLERK
535 DUANE STREET
GLEN ELLYN, IL 60137

Ordinance No. 6673

**An Ordinance Approving
A Special Use Permit, Variations from the Zoning Code,
Variations from the Sign Code, and the Exterior Appearance
For the Construction and Operation of a
Raising Cane's Chicken Fingers Restaurant with a Drive-thru
Proposed on Property Commonly Known as 495-499 Roosevelt Road
Glen Ellyn, Illinois 60137**

Whereas, Raising Cane's Restaurants, LLC, lessee of property commonly known as 495-499 Roosevelt Road, has petitioned the Village President and Board of Trustees for approval of the following:

A. A Special Use Permit for drive-in commercial facility (i.e. Drive-thru) in accordance with Section 10-4-15(B)9 of the Zoning Code.

B. The following variations from the Glen Ellyn Zoning Code:

1. A variation from Section 10-5-8(I) of the Zoning Code to allow for a 10' drive-thru aisle in lieu of the minimum required 12' drive-thru aisle.
2. A variation from Section 10-5-5(C)1 of the Zoning Code to allow for an impervious surface setback of 4.5' along the west property line in lieu of the minimum required impervious surface setback of 8.3'.
3. A variation from Section 10-4-15(G)15 of the Zoning Code to provide 33 parking spaces in lieu of the 34 parking spaces required.

C. The following variations from the Glen Ellyn Sign Code:

1. A variation from Section 4-5-10(A) of the Sign Code to allow 4 signs in lieu of 3 sign permitted for a corner lot.
2. A variation from Section 4-5-10(A) of the Sign Code to allow for a total combined area of all signs to be 185 square feet in lieu of the maximum 150 square feet permitted on a corner lot.
3. A variation from Section 4-5-10(A) of the Sign Code to allow a wall sign to have a surface area of 67.52 square feet in lieu of the maximum 46 square feet permitted for a wall sign.
4. A variation from Section 4-5-10(A)2 of the Sign Code to allow a freestanding sign to have a surface area of 56 square feet in lieu of the maximum 50 square feet permitted.

D. Exterior Appearance approval in accordance with the Glen Ellyn Appearance Review

Guidelines, Ordinance No. 5508.

all to accommodate the construction and operation of a Raising Cane's Chicken Fingers restaurant with a drive-thru; and

Whereas, the subject property is located at the southwest corner of Roosevelt Road and Main Street in the C3 Service Commercial District; and

Whereas, the property is legally described as follows:

LOTS 1, 2, 3, THE EAST 35.56 FEET OF LOT 21 AND ALL OF LOTS 22 AND 23 IN BLOCK 82 IN WHEATON ESTATES, BEING A SUBDIVISION IN SECTION 22 AND SECTION 23, TOWNSHIP 39 NORTH, RANGE 10, EAST OF THE THIRD PRINCIPAL MERIDIAN, ACCORDING TO THE PLAT THEREOF RECORDED AUGUST 7, 1925 AS DOCUMENT 197514, (EXCEPTING THEREFROM THAT PART TAKEN THROUGH CONDEMNATION CASE 88ED-139, BEING MORE PARTICULARY DESCRIBED AS FOLLOWS: BEGINNING AT THE NORTHWEST CORNER OF AFORESAID LOT 3 IN BLOCK 82 IN WHEATON ESTATES; THENCE ON AN ASSUMED BEARING OF SOUTH 00 DEGEREES, 06 MINUTES, 18 SECONDS WEST 5.00 FEET ALONG THE WEST LINE OF SAID LOT 3; THENCE NORTH 89 DEGREES, 23 MINUTES, 25 SECONDS EAST 152.60 FEET TO A POINT, SAID POINT BEING MONUENTED BY AN ILLINOIS DEPARTMENT OF TRANSPORTATION, DIVISION OF HIGHWAYS SURVEY MARKER; THENCE SOUTH 45 DEGREES, 15 MINUTES, 06 SECONDS EAST 21.08 FEET TO A POINT ON THE EAST LINE OF SAID LOT 1, SAID POINT BEING MONUMENTED BY AN ILLINOIS DEPARTMENT OF TRANSPORTATION, DIVISION OF HIGHWAYS SURVEY MARKER; THENCE WESTERLY ALONG A TANGENTIAL CURVE CONCAVE TO THE SOUTH, RADIUS 19.75 FEET, CENTRAL ANGLE 90 DEGREES, 42 MINUTES, 59 SECONDS, 31.27 FEET TO A POINT ON THE NORTH LINE OF SAID LOT 1; THENCE SOUTH 89 DEGREES, 23 MINUTES, 25 SECONDS WEST 147.60 FEET ALONG THE NORTH LINE OF SAID LOTS 1, 2, AND 3 TO THE POINT OF BEGINNING), ALL IN DUPAGE COUNTY, ILLINOIS.

P.I.N.(s) 05-23-101-028; 05-23-101-029

Whereas, following due and proper publication of notice in The Daily Herald not less than fifteen (15) nor more than thirty (30) days prior thereto, the Plan Commission of the Village of Glen Ellyn conducted a public hearing on January 24, 2019 at which hearing the Plan Commission

considered the petitioner's request for approval of the requested Special Use Permit, Variations from the Zoning Code, and Variations from the Sign Code; and

Whereas, at the January 24, 2019 public hearing of the Plan Commission, the petitioner presented evidence, testimony, and exhibits in support of the requests and no members of the public spoke in favor of or in opposition to the requests; and

Whereas, after having considered the evidence presented, including the exhibits and materials submitted, the Plan Commission made its findings of fact and recommendations and by a vote of five (5) "yes" and zero (0) "no", the Plan Commission recommended approval of the requests with conditions as set forth in the January 24, 2019 minutes of the Plan Commission, a draft of which is attached hereto as Exhibit "A"; and

Whereas, the Village President and Board of Trustees have reviewed the evidence, exhibits, and materials presented at the January 24, 2019 Plan Commission public hearing and have considered the recommendation of the Plan Commission; and

Whereas, the Village Staff have performed the review of the application for Exterior Appearance and has determined that the proposed exterior appearance is in substantial conformance with the Village's Appearance Review Guidelines and recommends approval of the proposed exterior appearance; and

Whereas, the President and Board of Trustees have determined that granting the requested Special Use Permit and Variations from the Zoning Code is consistent with the goals of the Glen Ellyn Zoning Code, and that granting the Variations from the Sign Code is consistent with the goals of the Glen Ellyn Sign Code, and that granting approval of the Exterior Appearance is consistent with the objectives of the Glen Ellyn Appearance Review Guidelines.

Now, Therefore, be it Ordained by the President and Board of Trustees of the Village of Glen Ellyn, DuPage County, Illinois, in the exercise of its home rule powers, as follows:

Section One: The minutes from the January 24, 2019 Plan Commission public hearing, a draft of which is attached hereto as Exhibit "A", and the findings of fact contained in the petitioner's applications, as well as in the preambles above, are hereby adopted as the findings of fact of the Village President and Board of Trustees based upon their review of the evidence, exhibits, and materials presented at the January 24, 2019 public hearing of the Plan Commission.

Section Two: Based upon the findings of fact and recommendations of the Plan Commission for the Special Use Permit, Variations from the Zoning Code, and Variations from the Sign Code, and the staff recommendation for the Exterior Appearance approval, as adopted herein, and the findings of fact and conclusions set forth in the preambles above, the Village President and Board of Trustees hereby grant approval of the following:

A. A Special Use Permit for drive-in commercial facility (i.e. Drive-thru) in accordance with Section 10-4-15(B)9 of the Zoning Code.

B. The following variations from the Glen Ellyn Zoning Code:

    1. A variation from Section 10-5-8(I) of the Zoning Code to allow for a 10' drive-thru aisle in lieu of the minimum required 12' drive-thru aisle.
    2. A variation from Section 10-5-5(C)1 of the Zoning Code to allow for an impervious surface setback of 4.5' along the west property line in lieu of the minimum required impervious surface setback of 8.3'.
    3. A variation from Section 10-4-15(G)15 of the Zoning Code to provide 33 parking spaces in lieu of the 34 parking spaces required.

C. The following variations from the Glen Ellyn Sign Code:

    1. A variation from Section 4-5-10(A) of the Sign Code to allow 4 signs in lieu of 3 sign permitted for a corner lot.

2. A variation from Section 4-5-10(A) of the Sign Code to allow for a total combined area of all signs to be 185 square feet in lieu of the maximum 150 square feet permitted on a corner lot.

3. A variation from Section 4-5-10(A) of the Sign Code to allow a wall sign to have a surface area of 67.52 square feet in lieu of the maximum 46 square feet permitted for a wall sign.

4. A variation from Section 4-5-10(A)2 of the Sign Code to allow a freestanding sign to have a surface area of 56 square feet in lieu of the maximum 50 square feet permitted.

D. The Exterior Appearance of the proposed project.

all to accommodate the construction and operation of a Raising Cane's Chicken Fingers restaurant with a drive-thru.

Section Three: The granting of the approvals for the Special Use Permit, Variations from the Zoning Code, Variations from the Sign Code, and Exterior Appearance is subject to the following conditions:

A. The project shall be constructed in substantial conformance with the plans submitted and the testimony presented at a draft of which is public hearing before the Plan Commission, with the exterior appearance plans recommended by staff, and with the petitioner's application packet including the following plans and documents referenced below, as though they were attached to this Ordinance:

1. Application for a Special Use Permit stamped received August 6, 2018
2. Application for Zoning Variations stamped received November 19, 2018
3. Application for Sign Variations stamped received November 19, 2018
4. Narrative prepared by the petitioner dated May 30, 2017
5. Site Keynote Plan prepared by Kimley Horn dated October 16, 2018 attached hereto as Exhibit "B"
6. Landscape Plan prepared by Kimley Horn dated November 15, 2018, attached hereto as Exhibit "C"
7. Building Elevations prepared by CSRS, dated September 28, 2018, attached hereto as Exhibit "D"
8. Sign Elevations (16 Sheets), stamped received October, 3 2018, attached hereto as Exhibit "E"
9. Photometric Plan prepared by CSRS, dated October 2, 2018, attached hereto as Exhibit "F"
10. Light Fixture Cut-sheets prepared by Lithonia Lighting (23 pages), Atlas Lighting Products (2 pages), Gotham (10 pages), WAC Lighting (4 pages) (39 pages total), stamped received October 3, 2018

11. Store Layout prepared by CSRS stamped received October, 3 2018

B. Final IDOT approval of the proposed RI/RO access shall be obtained prior to the issuance of a building permit for construction of the building including the foundation work.

C. The Plat of Consolidation shall be finalized and recorded prior to the issuance of a building permit for construction of the building including the foundation work.

D. Outstanding items contained in the Public Works memo prepared by Rich Daubert, P.E. dated October 26, 2018 shall be addressed at the time of the building permit submission.

E. If any rooftop units, after installation, are still visible from the adjacent rights-of-way of Main Street, Roosevelt Road, or Taft Avenue, then additional screening shall be installed to fully screen these units.

Section Four: The Building and Zoning Official is hereby authorized to issue all necessary building and occupancy permits pursuant to the Special Use Permit, Zoning Variations, Sign Variations, and Exterior Appearance approved herein, provided that all the conditions set forth hereinabove have been met and that the applicant complies with all other applicable laws and ordinances of the Village of Glen Ellyn. This grant of approval of the aforementioned requests shall expire and become null and void within 24 months of the date of this Ordinance unless a temporary occupancy permit is applied for within said time period, provided, however, that the Village Board, by motion, may extend the period during which an occupancy permit must be applied for. Further, the Village Board may, for good cause shown, waive or modify any conditions set forth in this ordinance without requiring that the matter return for public hearing.

Section Five: This Ordinance shall be in full force and effect from and after the passage, approval, and publication in pamphlet form.

Section Six: Failure of the owners or other party in interest or a subsequent owner or other party in interest to comply with the terms of this Ordinance, after execution of such Ordinance,

shall subject the owners or party in interest to the penalties set forth in Section 10-10-18 (A) and (B) of the Village of Glen Ellyn Zoning Code.

Section Seven: The Village Clerk is hereby authorized to record this Ordinance with the DuPage County Recorder.

Passed by the President and Board of Trustees of the Village of Glen Ellyn, Illinois this _____ day of _____.

Ayes		Diane McGinley		Pete Ladesic		Mark Senak
		Craig Pryde		Bill Enright		Gary Fasules
		John Kenwood				
Nayes		Diane McGinley		Pete Ladesic		Mark Senak
		Craig Pryde		Bill Enright		Gary Fasules
		John Kenwood				
Absent		Diane McGinley		Pete Ladesic		Mark Senak
		Craig Pryde		Bill Enright		Gary Fasules
		John Kenwood				

Approved by the Village President of the Village of Glen Ellyn, Illinois this _____ day of _____.

_____

Village President

Attest:

_____

Village Clerk

AFFIX VILLAGE SEAL

(Published in pamphlet form and posted on the _____ day of _____, 20____.)

ATTACHMENTS:

- Location Map (PDF)
- Draft Plan Commission Meeting Minutes - January 24, 2019 - Exhibit "A" (PDF)
- Site Plan - Exhibit "B" (PDF)
- Landscape Plan - Exhibit "C" (PDF)
- Building Elevations - Exhibit "D" (PDF)
- Sign Elevations - Exhibit "E" (PDF)
- Photometric Plan - Exhibit "F" (PDF)
- Public Works memo prepared by Rich Daubert, P.E. dated October 26, 2018 (PDF)
- Select Materials from Petitioner's Application Packet (PDF)

GIS consortium MapOffice™

495-499 Roosevelt RD Raising Cain's

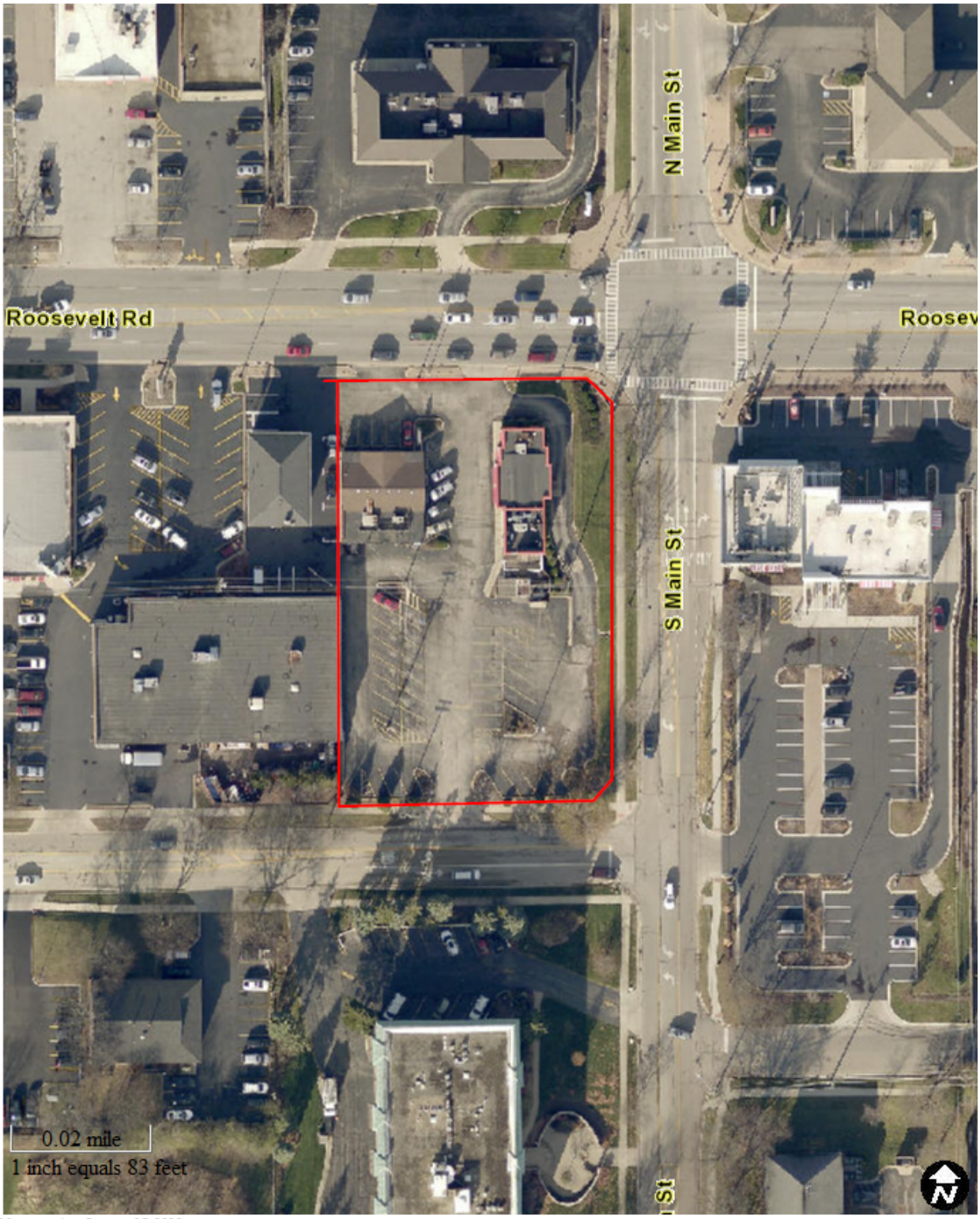

Map created on January 15, 2019.

© 2019 GIS Consortium and MGP Inc. All Rights Reserved.
The GIS Consortium and MGP Inc. are not liable for any use, misuse, modification or disclosure of any map provided under applicable law.
Disclaimer: This map is for general information purposes only. Although the information is believed to be generally accurate, errors may exist and the user should independently conf for accuracy. The map does not constitute a regulatory determination and is not a base for engineering design. A Registered Land Surveyor should be consulted to determine precise location boundaries on the ground.

Exhibit "A"

DRAFT MINUTES
REGULAR PLAN COMMISSION MEETING
JANUARY 24, 2019

Call to Order

The regular meeting of the Plan Commission was called to order by Acting Chairperson John Mulherin at 7:00 p.m. Plan Commissioners, Phillip Hartweg, David Rodemann, Mohammed Saeed and Jamie Vondruska were present. Plan Commissioners Lloyd Berry, Angela Fanella, Tracy Heming-Littwin and Chairperson Mary Loch were excused. Also present were Village Planner John Sterrett, Village Planner Kelly Purvis, Planning Intern Evan Clements, Village Trustee Pete Ladesic, and Recording Secretary Debbie Solomon.

Public Comment

No general comments on non-agenda items were made by the public at this Plan Commission meeting.

Approval of Draft Minutes

Commissioner Saeed moved, seconded by Commissioner Vondruska, to approve the minutes of the January 7, 2019 Plan Commission meeting. The motion carried unanimously by voice vote.

Commissioner Saeed moved, seconded by Commissioner Vondruska, to approve the minutes of the January 10, 2019 Plan Commission meeting. The motion carried unanimously by voice vote.

Public Hearing – 495-499 Roosevelt Road – Raising Cane's Chicken Fingers – Special Use Permit, Zoning Variations & Sign Variations

On the agenda was a public hearing regarding a public hearing to consider the application for a Special Use Permit, Zoning Variations and Sign Variations for 2495-499 Roosevelt Road.

PUBLIC HEARING – 495-499 ROOSEVELT ROAD – RAISING CANE'S CHICKEN FINGERS – SPECIAL USE PERMIT, ZONING VARIATIONS & SIGN VARIATIONS

PUBLIC HEARING WITH DISCUSSION, CONSIDERATION AND RECOMMENDATION REGARDING A REQUEST FOR APPROVAL OF A SPECIAL USE PERMIT, ZONING VARIATIONS AND SIGN VARIATIONS FOR RAISING CANE'S RESTAURANTS, LLC TO CONSTRUCT A 3,707 SQUARE FOOT RAISING CANE'S CHICKEN FINGERS RESTAURANT WITH A DRIVE-THRU.

Commissioner Hartweg, seconded by Commissioner Rodemann, to open the public hearing at 7:01 p.m. The motion carried unanimously by voice vote.

Staff Introduction

Planning Intern Clements was sworn in and stated the petitioner is Raising Cane's Restaurant, LLC, lessee of the property located at 495-499 Roosevelt Road, represented by LuAron McCormack. Planning Intern Clements stated they are conducting a public hearing for approval of a Special Use Permit, Zoning Variations and Sign Variations to construct a Raising Cane's Chicken Fingers restaurant with a drive-thru. Planning Intern Clements stated in order to facilitate the project, the petitioner will need to receive approval of a Special Use Permit for a drive-thru, Zoning Variations, Sign Variations, Lot Consolidation and Exterior Appearance.

Planning Intern Clements stated a notice of public hearing for the requested approvals was published in the January 9, 2019 edition of the Daily Herald. Property owners within 250 feet of the property were notified by mail of the public hearing and placard signs were placed on the site.

Planning Intern Clements stated in order to accommodate the project, the petitioner is specifically requesting approval of the following:

A. A Special Use Permit for a drive-in commercial facility (i.e. drive-thru) in accordance with Section 10-4-15(B)9 of the Zoning Code

B. The following variations from the Glen Ellyn Zoning Code:

1. A variation from Section 10-5-8(I) of the Zoning Code to allow for a 10' drive-thru aisle in lieu of the minimum required 12' drive-thru aisle.

2. A variation from Section 10-5-5(C)1 of the Zoning Code to allow for an impervious surface setback of 4.5' along the west property line in lieu of the minimum required impervious surface setback of 8.3'.

3. A variation from Section 10-4-15(G)15 of the Zoning Code to provide 33 parking spaces in lieu of the 34 parking spaces required.

B. The following variations from the Glen Ellyn Sign Code:

1. A variation from Section 4-5-10(A) of the Sign Code to allow 4 signs in lieu of 3 sign permitted for a corner lot.

2. A variation from Section 4-5-10(A) of the Sign Code to allow for a total combined area of all signs to be 185 square feet in lieu of the maximum 150 square feet permitted on a corner lot.

3. A variation from Section 4-5-10(A) of the Sign Code to allow a wall sign to have a surface area of 67.52 square feet in lieu of the maximum 46 square feet permitted for a wall sign.

4. A variation from Section 4-5-10(A)2 of the Sign Code to allow a freestanding sign to have a surface area of 56 square feet in lieu of the maximum 50 square feet permitted.

Planning Intern Clements stated the subject property contains two parcels totaling 43,035 square feet in area, and the eastern most parcel currently contains a vacant Arby's restaurant and the western parcel contains a vacant Caribou Coffee restaurant. Planning Intern Clements stated both buildings will be demolished as part of the redevelopment.

Planning Intern Clements stated the surrounding land uses primarily consist of commercial with some office and residential uses. Planning Intern Clements stated zoning in the surrounding area is C3 along Roosevelt Road with C4 and R4 along Taft Avenue, and the surrounding land uses are:

North: Commercial (Retail/Restaurant uses) zoned C3 Service Commercial District
South: Multi-Family Residential zoned R4 Multi-Family Residential District
Southwest: Offices zoned C4 Office District
East: Commercial (Restaurant uses) zoned C3 Service Commercial District
West: Commercial (Service/Retail uses) zoned C3 Service Commercial District

Planning Intern Clements stated the petitioner is proposing the construction of a 3,707 square foot building for a Raising Cane's Chicken Finger restaurant, and the restaurant will contain a drive-thru as well as a small outdoor eating area. Planning Intern Clements stated as part of the development of the entire site a proposed right-in-right-out access on Roosevelt Road has been approved by IDOT in concept.

Planning Intern Clements stated the use of a drive-thru requires a Special Use Permit, and the drive-thru will have one lane that wraps around the building with the ordering boards located

to the south of the building and the entrance to the drive-thru lane being located approximately 60 feet away from the Roosevelt Road access. Planning Intern Clements stated the drive-thru lane will accommodate a total of 10 stacked vehicles to satisfy the minimum 5 stacking spaces required. Planning Intern Clements stated the petitioner is seeking a variation to allow for a 10 foot drive aisle in lieu of the required 12 foot drive aisle. Planning Intern Clements stated this is a common variation that has been approved by the Village Board in the past. Planning Intern Clements stated considering the slow speeds at which patrons drive through the drive thru lane, staff believes that this variation will not create a health and safety hazard.

Planning Intern Clements stated landscaping will be installed along Roosevelt Road, Main Street, and Taft Avenue, and the petitioner is also proposing landscaping on the interior of the lot including foundation plantings, parking lot islands, landscaping in the drive-thru area, and plantings along the west lot line. Planning Intern Clements stated the landscaping consists of a mixture of evergreens, shrubs, and perennials, as is required by code.

Planning Intern Clements showed a proposed rendering of the building and stated the existing utilities will be undergrounded with this project.

Planning Intern Clements stated the Plan Commission is being asked to conduct a public hearing on the requests for approval of a Special Use Permit, variations from the Zoning Code, and variations from the Sign Code. Planning Intern Clements stated the Plan Commission should consider the petitioner's requests and make a recommendation to the Village Board for approval, approval with conditions or denial. In reviewing the applications, the Commission should consider the following criteria:

- Section 10-10-14(E) of the Zoning Code for the Special Use for a drive-thru
- Section 10-10-12 of the Zoning Code for the Zoning Variations
- Section 4-5-17(G)3 of the Sign Code for the Sign Variations
-

Planning Intern Clements stated the Plan Commission may wish to consider that the following conditions be placed on the recommendation of the project:

1. Final IDOT approval of the proposed RI/RO access shall be obtained prior to the issuance of a building permit for construction of the building including the foundation work.

2. The Plat of Consolidation shall be finalized and recorded prior to the issuance of a building permit for construction of the building including the foundation work.

3. Outstanding items contained in the Public Works memo prepared by Rich Daubert, P.E. dated October 26, 2018 shall be addressed at the time of the building permit submission.

4. If any rooftop units, after installation, are still visible from the adjacent rights-of-way of Main Street, Roosevelt Road, or Taft Avenue, then additional screening shall be installed to fully screen these units.

5. Any other conditions recommended by the Plan Commission.

Questions from the Plan Commission

Commissioner Saeed asked if the total sign square footage was 185 square feet as he adds up a different total. Village Planner Sterrett was sworn in and stated the Staff Memo is incorrect on page 36 as the monument sign is 56 square feet and not 67 as listed.

Acting Chairperson Mulherin asked about the process and status of the conditional approval by IDOT for the right-in/right out piece. Planning Intern Clements stated they received conditional approval from IDOT through the Project Engineer, and this is good enough for staff to move forward with this. Planning Intern Clements stated it is the final dimensions that they need approval from IDOT on. Acting Chairperson Mulherin stated the concept is approved, but they just need final dimensions to which Planning Intern Clements stated this is correct.

Commissioner Vondruska asked about the north and south entrances. Planning Intern Clements stated just having the north and south entrances are fine as this pass-through discourages people from making a left out.

Acting Chairperson Mulherin asked if there is currently a non-pervious separation between the lot to the west and this property. Planning Intern Clements stated it is currently parking lot to parking lot with the buildings almost adjacent.

Commissioner Rodemann asked if staff is comfortable with the site circulation as there will be looping around the building. Planning Intern Clements stated staff is fine with this. Commissioner Rodemann asked if the handicapped spaces will need to meet Illinois' ADA standards to which Planning Intern Clements stated they will.

Petitioner's Presentation

LuAron McCormack, Development Manager with Raising Cain's Chicken Fingers in Plano, Texas, Jason Cooper, Professional Engineer with Kimley-Horn Engineering in Lisle, Illinois, and Julie Olson, Architect with CSRS Architects, Inc. in Baton Rouge, Louisiana, were sworn in.

Ms. McCormack presented the history of Raising Cane's Restaurants and stated the first Raising Cane's Restaurant was built in 1996, located outside the gate of Louisiana State University. Ms. McCormack stated they have over 450 restaurants internationally and are very involved in the community. Ms. McCormack stated they believe in giving back. Ms. McCormack showed pictures of existing Raising Cane's locations.

Questions from the Plan Commission

Commissioner Rodemann stated he has concerns with vehicles circling the building. Commissioner Rodemann stated there is proposed parking on the east side of the property and asked how pedestrians from this side will enter the building. Mr. Cooper stated the majority of Raising Cane's business is done in the drive-thru so the majority of people would park on the west side of the property as there will be a door on that side. Mr. Cooper stated this is a site concept that is utilized often, and they believe it is the best layout.

Commissioner Rodemann asked about the narrower drive aisle. Mr. Cooper stated they worked closely with the Village staff on the final engineering of this, and there will be signage to alert vehicle drivers to watch for pedestrians. Commissioner Rodemann asked if there would be a standing waiting area for vehicles. Mr. Cooper stated that is not a part of this plan.

Acting Chairperson Mulherin asked to review the signage which was shown on the screen. Acting Chairperson Mulherin asked where the monument sign would be. Planning Intern Clements stated this sign would be on the northeast corner of the property.

Ms. McCormack stated if they do not use the mural signage that they normally use, the heart artwork is used instead. Mr. Cooper stated the Naperville Raising Cain's location does have this mural on the building.

Commissioner Hartweg asked if the proposed building will be the same size as the Naperville location. Mr. Cooper stated the building would be the same size as Naperville's as the same prototype is being used.

Commissioner Saeed asked if the heart sign could be brought down in size to closer to the maximum size for a wall sign. Ms. McCormack stated this sign has always been a standard size, and she is not sure if it can be reduced.

Persons in Favor of or in Opposition to the Request

None

Commissioner Hartweg moved, seconded by Commissioner Vondruska to close the public hearing at 7:34 p.m. The motion carried unanimously by voice vote.

Comments from the Plan Commission

Commissioner Rodemann stated he supports the project as it is a nice project. Commissioner Rodemann stated this corner needs revitalization, and the design is nice. Commissioner Rodemann stated there is a logistical challenge to moving people in and out. Commissioner Rodemann stated he has no exception to the signage as presented as the signage seems appropriate to the size of the building, and the building is on a corner.

Commissioner Vondruska thanked the petitioner for considering Glen Ellyn for its business. Commissioner Vondruska stated the signage in relation to the rest of the building is nicely done, and he supports the other variations as well. Commissioner Vondruska stated this will be a nice addition to this corner.

Commissioner Hartweg stated this is a good project and seems like a well-planned operation. Commissioner Hartweg stated he likes the artwork as it is homey and sets the building apart. Commissioner Hartweg stated he is glad they are considering Glen Ellyn as this project is very positive.

Commissioner Saeed stated this is a good project, and the variations are not too out of line. Commissioner Saeed stated he was concerned about the maximum square footage of signs, but the petitioner stated this has been used before. Commissioner Saeed stated he supports this project.

Acting Chairperson Mulherin stated he supports the project as well. Acting Chairperson Mulherin stated the variances are appropriate and thanked the petitioner for coming to Glen Ellyn.

Motion

Commissioner Vondruska moved, seconded by Commissioner Hartweg, to recommend approval of a Special Use Permit, Variations from the Glen Ellyn Zoning Code, and Variations from the Glen Ellyn Sign Code for Raising Cane's Restaurants, LLC for the property at 495-499 Roosevelt Road to accommodate a proposed Raising Cane's Chicken Fingers Restaurant with a drive-thru.

Having considered the applications of Raising Cane's Restaurants, LLC for approval of a Special Use Permit, Variations from the Zoning Code, and Variations from the Sign Code to accommodate the construction of a Raising Cane's Chicken Fingers restaurant with a drive-thru at the property located at 495-499 Roosevelt Road in the C3 Service Commercial District, the Plan Commission hereby adopts the findings of fact contained in the petitioner's application packet and presented by the petitioner at the public hearing as well as the findings of fact included in the deliberations of the Plan Commission, and recommends to the Village Board approval of the following requests:

A. A Special Use Permit for a drive-in commercial facility (i.e. drive-thru) in accordance with Section 10-4-15(B)9 of the Zoning Code

B. The following variations from the Glen Ellyn Zoning Code:

2. A variation from Section 10-5-8(I) of the Zoning Code to allow for a 10' drive-thru aisle in lieu of the minimum required 12' drive-thru aisle.

2. A variation from Section 10-5-5(C)1 of the Zoning Code to allow for an impervious surface setback of 4.5' along the west property line in lieu of the minimum required impervious surface setback of 8.3'.

3. A variation from Section 10-4-15(G)15 of the Zoning Code to provide 33 parking spaces in lieu of the 34 parking spaces required.

C. The following variations from the Glen Ellyn Sign Code:

1. A variation from Section 4-5-10(A) of the Sign Code to allow 4 signs in lieu of 3 sign permitted for a corner lot.

2. A variation from Section 4-5-10(A) of the Sign Code to allow for a total combined area of all signs to be 185 square feet in lieu of the maximum 150 square feet permitted on a corner lot.

3. A variation from Section 4-5-10(A) of the Sign Code to allow a wall sign to have a surface area of 67.52 square feet in lieu of the maximum 46 square feet permitted for a wall sign.

4. A variation from Section 4-5-10(A)2 of the Sign Code to allow a freestanding sign to have a surface area of 56 square feet in lieu of the maximum 50 square feet permitted.

Subject to the following conditions:

1. Final IDOT approval of the proposed RI/RO access shall be obtained prior to the issuance of a building permit for construction of the building including the foundation work.

2. The Plat of Consolidation shall be finalized and recorded prior to the issuance of a building permit for construction of the building including the foundation work.
3. Outstanding items contained in the Public Works memo prepared by Rich Daubert, P.E. dated October 26, 2018 shall be addressed at the time of the building permit submission.

4. If any rooftop units, after installation, are still visible from the adjacent rights-of-way of Main Street, Roosevelt Road, or Taft Avenue, then additional screening shall be installed to fully screen these units.

The motion carried with five (5) yes votes and zero (0) no votes as follows: Plan Commissioners Vondruska, Hartweg, Rodemann, Saeed and Acting Chairperson Mulherin voted "yes."

Village Planner Sterrett stated this will be on the Village Board's agenda at the February 11th Village Board Meeting.

<u>Pre-Application Meeting – 21W536 Acorn Avenue and 0N282 Cumnor Avenue – Crane & Anest – Minor Subdivision with Subdivision & Zoning Variations</u>

On the agenda was a pre-application meeting to discuss the Minor Subdivision of these two lots into three lots with variations.

Staff Presentation

Village Planner Purvis presented the background on this minor subdivision and stated the petitioners are David Crane, owner of the property located at 21W536 Acorn Avenue, and Dennis Anest, owner of the property located at 0N282 Cumnor Avenue. Village Planner Purvis showed an overview map of the subject properties and stated the subject properties are located just east of the Enclaves Subdivision at the corner of Cumnor Avenue and Acorn Avenue. Village Planner Purvis stated both properties are zoned R-4 Single Family Residential in unincorporated DuPage County, and the surrounding land uses are R-4 DuPage County and R2 Single Family Residential Glen Ellyn.

Village Planner Purvis stated the petitioners are requesting a pre-application meeting to discuss the re-subdivision of their two properties into three lots. Village Planner Purvis stated due to the existing layout of the land, variations would be required in order to resubdivide the lots.

Village Planner Purvis stated the Village has held several meetings over the years with the residents on Cumnor Ave., Acorn Ave., Fairway St., and Walnut Rd. regarding the extension of Village utilities (water and sewer) and annexation to the Village. Village Planner Purvis stated in large part, the property owners in this area have been uninterested in paying the cost to extend the utilities (approximately $50,000 per property) and the extra costs associated with becoming a part of the Village. Village Planner Purvis stated as part of the approval of the Enclaves Subdivision in 2016, the developers of the project were required to extend Village water and sanitary mains north from Hill Avenue to the corner of Cumnor Avenue and Fairway Street and north into the Enclaves Subdivision. Village Planner Purvis stated since the water and sewer mains are much closer now, there have been several residents on Cumnor Avenue, Acorn Avenue and Fairway Street that have expressed an interest in connecting to Village utilities and annexing. Village Planner Purvis stated the Village is in the process of drafting annexation agreements for 4 properties in this area and conducting Phase 1 and Phase 2 Engineering for the utility extension.

Village Planner Purvis stated in addition to connecting to utilities, David Crane, the property owner at 21W536 Acorn Avenue, is interested in subdividing his lot into two lots. Village Planner Purvis stated in order to do so, the Village would need to vacate a portion of the Acorn Avenue right-of-way, following the annexation of his property into the Village. Village Planner Purvis stated property owner Dennis Anest at 0N282 Cumnor Avenue is interested in receiving some of the vacated right-of-way as well, to increase the limits of his property to include his driveway (which is now partially within the public right-of-way). Village Planner Purvis stated it is typical for the Village to split rights-of-way 50/50 between adjoining properties, but in this case, the lots would be very oddly shaped if an equal split were to take place. Village Planner Purvis stated Village staff have met with the petitioners several times to discuss the proposed

subdivision of the properties and have suggested the proposed layout on the plat of subdivision attached for the Plan Commission's review.

Village Planner Purvis stated the proposed resubdivision of the properties would require an exchange of property (right-of-way vacation) from the Village to each of the property owners. Village Planner Purvis stated this process is typically reviewed by Village staff with final approval from the Village Board. Village Planner Purvis stated in conjunction with the vacation, Mr. Crane would subdivide his newly expanded property into two lots. Village Planner Purvis stated Mr. Crane plans to keep the existing house on the easterly lot and would create a second lot to the west meeting requirements of the R2 zoning district (as close to Code compliant as possible), which is what the property would be zoned upon annexation.

Village Planner Purvis stated Village staff reviewed several iterations of this proposal, each one resulting in non-conformities from the Code. Village Planner Purvis stated dead-end roads, private streets and flag lots are all prohibited in the Subdivision Code. Village Planner Purvis stated the Village's Engineers in the Public Works Department did not want to accept an oddly shaped, dead-end roadway that is 10 feet less in width than our standard roadways and would require repair and maintenance. Village Planner Purvis stated Public Works suggested that the portion of Acorn Avenue west of Cumnor Road should be a private street.

Village Planner Purvis reviewed the three options that have been discussed for this, and the Village staff recommends Option 3 to result in the creation of a flag lot that would help make the lots fairly rectangular in shape. Village Planner Purvis stated with this option, the Village would not be responsible for the maintenance of a dead-end road (as the roadway would become part of the properties). Village Planner Purvis stated some sort of shared access easement agreement that also covered the maintenance of the private road would need to be negotiated between the property owners in order for this configuration to work. Village Planner Purvis stated this layout would still require Mr. Anest to give a portion of his property to the northerly lot, but he would also benefit from the right-of-way vacation in this instance. Village Planner Purvis stated this option would not require that the roadway be brought to the Village's standards. Village Planner Purvis stated this option would require the below variations from the Subdivision and Zoning Code.

Village Planner Purvis stated in addition to approval of an annexation agreement, annexation and a right-of- way vacation, and based upon the preliminary plans the staff has at this time, staff anticipates that the petitioners will require approval of the following in order to proceed with the project:

1. A Minor Subdivision with the following variations:

    a. A Subdivision Variation to allow the construction of a flag lot; and

b. A Subdivision Variation to waive the requirement of undergrounding the utility lines and planting trees 40 foot on center; and

c. A Subdivision Variation to waive the requirement to install sidewalks (likely with a fee in lieu of installing sidewalks); and

2. A variation from the Zoning Code to allow a 20 foot lot width in lieu of an 80 foot lot width.

Village Planner Purvis stated typically, before the Village vacates public right-of-way, staff examines the site to determine if the land is of use to the Village. Village Planner Purvis stated in this case, there is a path that is supposed to be constructed as part of the Enclaves Subdivision that would terminate at Acorn Avenue. Village Planner Purvis stated the path is 10 feet wide and runs along the Enclaves northern boundary. Village Planner Purvis stated if Acorn Avenue were vacated by the Village there would be a missed opportunity to provide pedestrian connectivity to this path. Village Planner Purvis stated for this reason, staff has asked that a 10 foot easement be provided on the newly created lot that would extend to the public right-of-way. Village Planner Purvis stated the Village will likely construct the path at the same time the Enclaves' path is constructed using matching materials.

Village Planner Purvis stated the Plan Commission is being asked to conduct a pre-application conference and provide comments that will assist the petitioner in preparing a formal application. Village Planner Purvis stated in reviewing the project, the Plan Commission may wish to consider/provide feedback regarding the following:

1. If the Commission is supportive of the overall concept.
2. If the Commission would prefer one of the other configurations for the resubdivision of the lots.
3. If the Commission is comfortable with the requested variations.
4. Clarify any concerns.

<u>Questions from the Plan Commission</u>

Commissioner Vondruska asked why a more private drive is not used for Option 3. Village Planner Purvis stated it could be, and this is basically Option 1. Village Planner Purvis stated with either option, there is a private drive.

Commissioner Rodemann asked if the easement for the walkway is on the west side of the new lot and cross-shared drive to which Village Planner Purvis stated it is

Acting Chairperson Mulherin asked about the Village's responsibility for the roads as the Village is looking to the future with annexing the entire site. Village Planner Purvis stated Public Works does not want a little dead-end road, and the Fire Department and such could still circulate without a problem.

Commissioner Hartweg asked how confusing the road is now. Mr. Crane stated there is very little traffic, and the garbage trucks go in and back out.

Petitioner's Presentation

David Crane, owner of the property at 21W536 Acorn Avenue, stated he and Mr. Anest have been working on getting sanitary to their homes for some time. Mr. Crane stated they were going to try to divide the vacated right-of-way equally, but this would create very oddly-shaped lots. Mr. Crane stated the current Option 3 is a good compromise, and there would be enough rooms on all the lots. Mr. Crane stated with this option, the Village does not need to maintain a dead-end street. Mr. Crane stated there will be a financial arrangement with Mr. Anest so if the extra lot sells, Mr. Anest will benefit from this. Mr. Crane stated creating a third lot would help to increase the Village's tax base.

Commissioner Rodemann stated the 20-foot exposure of the flag lot does not expose anything. Mr. Crane stated they think there is enough room to get a separate driveway in. Commissioner Rodemann stated this is a good compromise.

Acting Chairperson Mulherin asked about the easement. Village Planner Purvis stated staff would ask the petitioners to have something worked out on this.

Comments from the Plan Commission

Commissioner Vondruska stated Option 3 logically makes sense. Commissioner Vondruska stated he supports this if the staff is comfortable with how this will fit in with future planning.

Commissioner Saeed stated he agrees with Option 3.

Commissioner Rodemann stated part of the easement agreement should be that the Village has adequate access to the back property.

Commissioner Hartweg stated he agrees with this. Commissioner Hartweg stated he was a little leery about a flag lot, but this makes the most sense.

Acting Chairperson Mulherin stated he is comfortable with all this as long as this Village is. Acting Chairperson Mulherin stated there should be an easement.

Acting Chairperson Mulherin stated no vote is needed on this at this time, and the consensus of the Plan Commission is supportive of this overall concept.

Trustee's Report

Trustee Ladesic stated there was a Workshop on Tuesday night, and the Village Board discussed the Apex 400 development. Trustee Ladesic stated there was lots of constructive input given by the Village staff, the Village Board and residents. Trustee Ladesic stated this project is generally supported by the Village Board, and the project will come to the Village Board for a vote at the January 28th meeting.

Chairperson's Report

Acting Chairperson Mulherin welcomed a member of the League of Women's Voters to the meeting who was observing.

Staff Report

Village Planner Sterrett stated there will be a Plan Commission meeting on February 14, 2019 to review the subarea for the Downtown Comprehensive Plan update. Village Planner Purvis stated there might be a Zoning Code Text Amendment to review as well.

Village Planner Purvis invited everyone to Fire Station #1 on Saturday, January 26th from 10:00 a.m. to 2:00 p.m. to a charrette for the future Downtown Streetscape project.

Other Business

None

Adjournment

Commissioner Hartweg moved, seconded by Commissioner Vondruska, to adjourn the meeting at 8:10 p.m. The motion carried unanimously by voice vote.

Respectfully Submitted,

Debbie Solomon
Recording Secretary

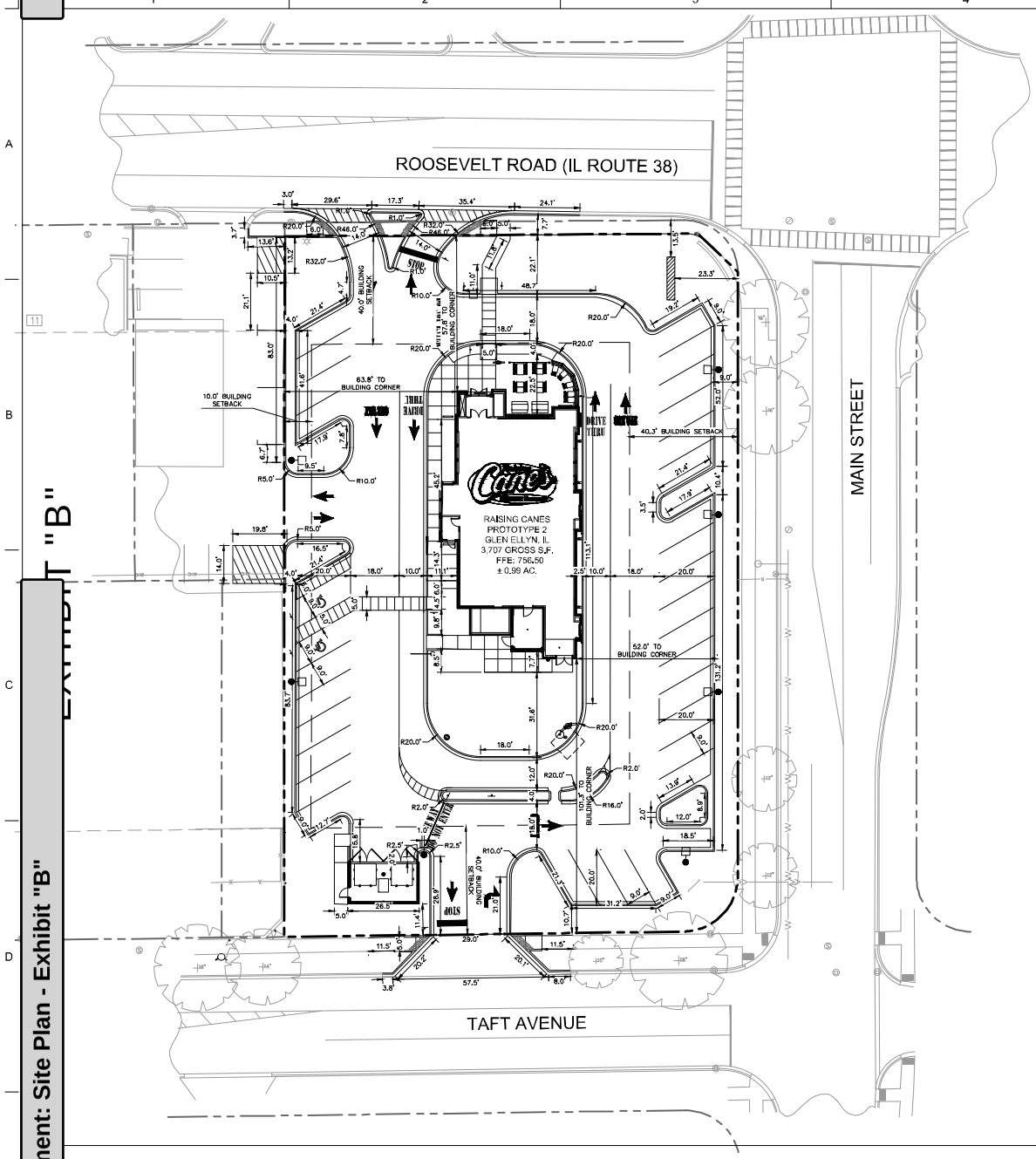

N

GRAPHIC SCALE IN FEET

1" = 20' @ 22X34

DIMENSION NOTES

1. ALL CURB RADII ARE TO BE 3' UNLESS OTHERWISE NOTED.
2. ALL DIMENSIONS ARE TO FACE OF CURB UNLESS OTHERWISE NOTED.
3. ALL CURBS SHALL BE 6" STANDARD EXCEPT WHERE OTHERWISE NOTED ON PLANS.
4. REFERENCE LANDSCAPE PLANS FOR PROPOSED BUFFERS, SCREENING, AND PLANTING.

LEGEND

- PROPERTY LINE
- ADJACENT PROPERTY LINE
- BUILDING SETBACK
- PROPOSED CONCRETE CURB
- EXISTING CURB

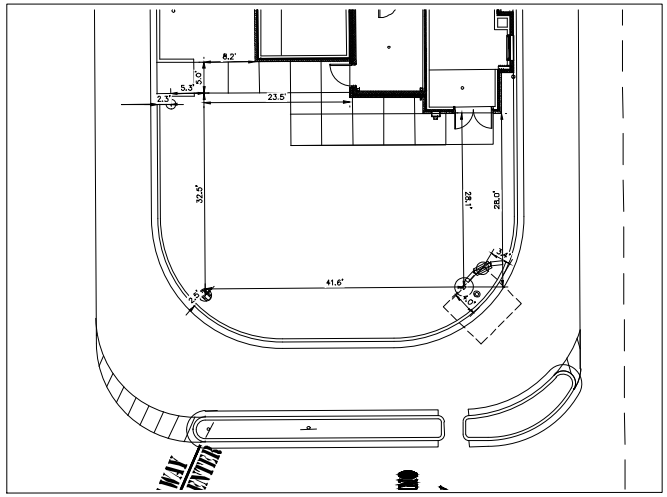

INSET 1

SCALE: 1"=10'

REFERENCE ARCHITECTURAL PLANS FOR DETAILS AND EXACT LOCATION OF MENU BOARD, HEIGHT DETECTOR AND PRE-ORDER BOARD.

BENCHMARKS

REFERENCE BENCHMARK:
DUPAGE COUNTY 2006 GEODETIC SURVEY MONUMENT
BENCHMARK: 0105
PID: DK3188

STATION IS LOCATED AT THE SOUTHEAST CORNER OF THE INTERSECTION OF MAIN STREET AND CRESCENT STREET. STATION IS 74.0 FEET SOUTH OF THE CENTERLINE OF CRESCENT STREET AND 42.5 FEET EAST OF THE CENTERLINE OF MAIN STREET. MONUMENT IS 3.5 INCH BRASS DISK SET ON THE TOP OF A 3 FOOT HIGH RETAINING WALL SURROUNDING AN ELECTRIC CONTROL BOX. MONUMENT IS 1 FOOT ABOVE GRADE.

ELEVATION = 745.28 FT

SITE BENCHMARK 1:
SQUARE CUT IN CONCRETE BASE OF TRAFFIC SIGNAL AT THE SOUTHWEST CORNER OF ROOSEVELT ROAD AND MAIN STREET.

ELEVATION = 757.54 FT

SITE BENCHMARK 2:
ARROW BOLT OF FIRE HYDRANT LOCATED AT THE SOUTHWEST CORNER OF SITE. (NORTH SIDE OF TAFT AVENUE)

ELEVATION = 756.78 FT

Call Before You Dig
JULIE
1-800-892-0123

CAUTION!!
CONTRACTOR IS TO VERIFY PRESENCE AND EXACT LOCATION OF ALL UTILITIES PRIOR TO CONSTRUCTION.

Raising Cane's
Restaurant Su
6800 Bishop Road
Tel: 972-769-3100

Store:

RAISING CANE'S #378
ROOSEVELT RD. & MAIN ST.
GLEN ELLYN, IL

Architect & Project Manager:

CSRS
IMAGINE SHAPE DELIVER
6767 Perkins Road Suite 200 Baton Rouge, LA 70808
Telephone: 225 769-0346 Fax: 225 767-0060
www.csrsonline.com

Set Control Information:

Setup / Update Date:

CSRS Project Manager:

Engineer's Information:

Kimley»Horn
2018 KIMLEY-HORN AND ASSOCIATES, INC.
1001 WARRENVILLE ROAD, SUITE 300, IL 60532
PHONE: 630-487-5550
WWW.KIMLEY-HORN.COM

FOR PERMIT

Sheet Revisions: (sheet specific per Designer)

#	Date:	Description:
	10/02/2018	Planning and Development Comments

Sheet Title:

DIMENSION CONTROL PLAN

Original Issue:	08/03/2018
Project Number:	168418009
Drawn By:	TWC
Checked By:	JCC

Sheet Number:

C5.1

REVIEW SET - NOT FOR CONSTRUCTION

Attachment: Landscape Plan - Exhibit "C"

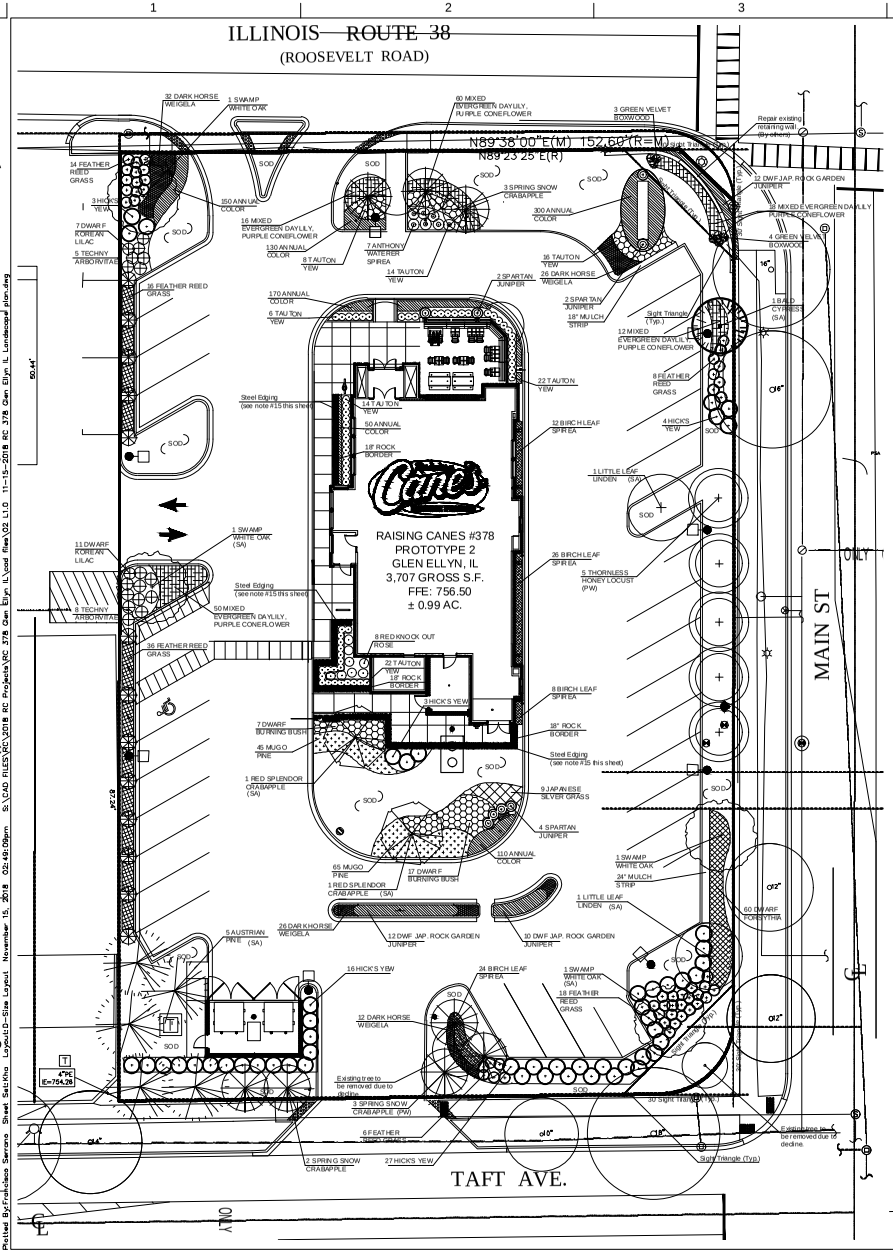

Plant Schedule RC# 378 Glen Ellyn IL 11/15/2018 rev.

Qty	Common Name	Botanical Name	Size	Height	Planting	Remarks
5	Austrian Pine	Pinus nigra	3" cal.	10.5'	as shown	Full, container grown
4	Swamp White Oak	Quercus bicolor	3" cal.	10-12'	as shown	Full, container grown
1	Bald Cypres	Taxodium distichum	4.5" cal.	11-12'	as shown	Full, container grown
2	Littleleaf Linden	Tilia cordata	2.5" cal.	8-10'	as shown	Full, container grown
2	Red Splendor Crabapple	Malus x 'Red Splendor'	2.5" cal.	8.5'	as shown	Full, container grown
8	Spring Snow Crabapple	Malus x 'Spring Snow'	2.5" cal.	6-7'	as shown	Full, container grown
5	Thornless Honey Locust	Gleditsia triacanthos 'inermis'	2.5" cal.	8-10'	as shown	Full, container grown
52	Hick's Yew	Taxus x media 'Hicksii'		4-5'	as shown	Full, container grown
13	Techny Arborvitae	Thuja occidentalis 'Techny'		4-5'	as shown	Full, container grown
2	Spartan Juniper	Juniperus chinensis 'Spartan'		8'	as shown	Full, container grown
4	Spartan Juniper	Juniperus chinensis 'Spartan'		4-5'	as shown	Full, container grown
7	Anthony Waterer Spiraea	Spiraea x bumalda 'Anthony Waterer'	3 gal	18"	as shown	Full, container grown
70	Birchleaf Spirea	Spiraea betulifolia 'Tor'	3 gal	18"	as shown	Full, container grown
24	Dwarf Burning Bush	Euonymus alatus compactus	3 gal	18"	as shown	Full, container grown
34	Dwarf Japanese Rock Garden Juniper	Juniper procumbens 'Nana'	3 gal	6"	@ 36" o.c.	Full, container grown
18	Dwarf Lilac	Syringa meyeri 'Palibin'	3 gal	18"	as shown	Full, container grown
110	Dwarf Mugo Pine	Pinus mugo pumilio	3 gal	18"	@ 20" o.c.	Full, container grown
92	Feather Reed Grass	Calamagrostis × acutiflora 'Karl Foerster'	3 gal	15"	as shown	Full, container grown
7	Green Velvet Boxwood	Buxus 'Green Velvet'	3 gal	18"	as shown	Full, container grown
9	Japanese Silver Grass	Miscanthus sinensis	3 gal	18"	as shown	Full, container grown
8	Red Knock Out Rose	Rosa spp. Red Knockout	3 gal	18"	as shown	Full, container grown
102	Tauton Yew	Taxus × media 'Taunton'	3 gal	18"	as shown	Full, container grown
60	Dwarf Forsythia 'Goldtide'	Forsythia x intermedia 'Goldtide'	1 gal	18"	@ 20" o.c.	Full, container grown
90	Evergreen Daylily	Hemerocallis fulva	1 gal	12"	@ 12" o.c.	Full, container grown
90	Purple Cone Flower	Echinacea purpurea	1 gal	6-8"	@ 12" o.c.	Full, container grown
96	Weigela 'Dark Horse'	Weigela florida 'Dark Horse'	1 gal	18"	@ 20" o.c.	Full, container grown
910	Annual Color	Seasonal choice	4" pot	4-12"	@ 8" o.c.	Full, container grown
175	18" Border w Rock / Gravel	2 - 3" River Rocks w metal edging	sq. ft.		3 -4" deep	Weed barrier fabric in bottom.

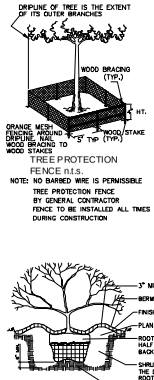

LANDSCAPE CALCULATIONS

RC 378 Glen Ellyn, IL 10/1/2018

1. Site Area Trees (SA) :

Ordinance requirement: 24 Trees @ Acre of green space

Existing: 9,580 s.f. of green space

0.25 = 1/4 of an Acre

Type	Size		Quantity
Deciduous shade	2" - 2.5" caliper	6	6 x (acres of green space) = required number 6 x .25 = 1.5 or 2 Littleleaf Linden
	3" - 4" caliper	5	5 x .25 = 1.25 or 2 Swamp White Oak
	4.5" caliper and larger	3	3 x .25 = .75 or 1 Bald Cypress
Ornamental	6' - 8' tall	3	3 x .25 = .75 or 1 Crabapple
	8.5' tall and larger	2	2 x .25 = .50 or 1 Crabapple
Evergreen	6' - 8' tall	2	2 x .25 = .5 or 1 ~~Techny Arborvitae~~ Austrian Pine
	8.5' - 10' tall	2	2 x .25 = .5 or 1 Austrian Pine
	10.5' tall and larger	1	1 x .25 = .25 or 1 Austrian Pine

10 total trees required

2. Street/ Parkway Trees (PW) :

Ordinance requirement:	1	2.5" cal. Trees @ 40' frontage
A. Roosevelt Rd.	152 l.f.	
	4	Tree required
Trees Provided:	1	Swamp White Oak 3" cal.
	3	Crabapple 8.5' ht.
	4	Total Trees
B. Main St.	240 l.f.	
	6	Tree required
Trees Provided:	5	Thornless Honeylocust 2-2.5" cal.
	1	Swamp White Oak 3" cal.
	6	Total Trees
C. Taft Ave.	168 l.f.	
	5	Tree required
Trees Provided:	5	Crabapple 8.5' ht.
	5	Total Trees

LANDSCAPE NOTES:

1. INSTALL 4" MIN. TOP SOIL TO ALL SOD AND SEED AREAS. CONTRACTOR IS RESPONSIBLE FOR FINE GRADING OF SOD AND SEED AREAS. REMOVE STONES, STICKS, AND DEBRIS LARGER THAN 1".
2. ALL SHRUB AREAS, UNLESS SPECIFIED AS OTHER, TO BE BED MULCHED WITH 3" DEPTH OF PARTIALLY DECOMPOSED HARDWOOD MULCH OVER WEED BARRIER.
3. PLANTING SOIL SHALL CONSIST OF 50% SELECT LOAMY TOPSOIL, 25% PEAT MOSS, 25% PIT RUN SAND.
4. GUARANTEE ALL WORK FOR A PERIOD OF ONE YEAR BEGINNING AT THE DATE OF ACCEPTANCE. MAKE ALL REPLACEMENTS PROMPTLY AS PER DIRECTION OF OWNER.
5. MATERIAL SHALL COMPLY WITH THE LATEST EDITION OF THE AMERICAN STANDARD FOR NURSERY STOCK, AMERICAN ASSOCIATION OF NURSERYMEN.
6. WATER AND MAINTAIN ALL PLANT MATERIALS, SEED AND SOD UNTIL INITIAL ACCEPTANCE.
7. REPAIR AT NO COST TO OWNER ALL DAMAGE TO PROPERTY RESULTING FROM LANDSCAPE WORK.
8. CALL 811 TO NOTIFY UTILITY COMPANY FOR LOCATING ALL UNDERGROUND UTILITIES. AVOID DAMAGE TO UTILITIES DURING THE COURSE OF THE WORK. REPAIR ANY DAMAGE TO UTILITIES, SITE STRUCTURES, ETC., RESULTING FROM LANDSCAPE CONSTRUCTION.
9. COORDINATE INSTALLATION WITH WORK OF OTHER SECTIONS.
10. STAKING AND GUYING OF TREES PER NATIONAL NURSERYMANS STANDARDS.
11. SWEEP AND WASH ALL PAVED SURFACES AND REMOVE ALL DEBRIS RESULTING FROM LANDSCAPE OPERATIONS.
12. FIELD VERIFY SOD LIMITS PRIOR TO INSTALLATION.
13. UNDERGROUND IRRIGATION SYSTEM PLANS DESIGNED BY A LICENSED IRRIGATOR WILL BE SUBMITTED WITH THE BUILDING PERMIT APPLICATION*
14. CONTRACTOR SHALL PROVIDE A MINIMUM 2% SLOPE AWAY FROM ALL STRUCTURES.
15. ALL ROCK BORDER TO BE SEPARATED FROM ADJACENT PLANTING BEDS WITH METAL EDGING.
16. 'SPRING SNOW' CRABAPPLE IS SELECTED IN LOCATIONS NEAR SIDEWALKS AS IT IS A NON-FRUITING VARIETY.

N

1 LANDSCAPE PLAN
SCALE: 1/16" = 1'-0"
0 16 32 48

Call Before You Dig
JULIE
1-800-892-0123

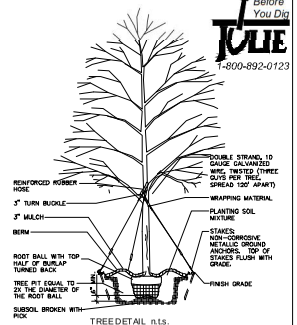

SITE ANALYSIS TABLE

EXISTING ZONING	C-3 SERVICE COMMERCIAL	
PROPOSED USE	RESTAURANT W/ DRIVE THRU	
LOT AREA	43,035 SF / 0.99 AC	
GROSS BUILDING AREA	3,707 SF	
TOTAL SEATS	103 SEATS	
	REQUIRED	PROVIDED
TOTAL PARKING	34 SPACES*	33 SPACES
ACCESSIBLE	2 SPACES	2 SPACES

*ONE PARKING SPACE IS REQUIRED FOR EVERY THREE SEATS.

Raising Cane's Chicken Fingers
Developer: Support Office
6800 Bishop Road, Plano, TX 75024
Tel#: 972-769-0100 Fax: 972-769-0110

Store

RAISING CANE'S #378
ROOSEVELT RD. & MAIN ST.
GLEN ELLYN, IL

Architect & Project Manager
CSRS
IMAGINE SHAPE DELIVER
6767 Perkins Road Suite 200 Baton Rouge, LA 70808
Telephone: 225 769-0546 Fax: 225 767-0060
www.csrsonline.com

Set Control Information:

Setup / Update Data:

CSRS Project Manager:

Professional 3rd Record

EXPIRES: 11/30/19 07/27/2018

Engineer's Information:
Kimley»Horn
2018 KIMLEY-HORN AND ASSOCIATES, INC.
1001 WARRENVILLE ROAD, SUITE 350, IL 60532
PHONE: 630-487-5550
WWW.KIMLEY-HORN.COM

FOR PERMIT

Sheet Revisions: (sheet specific per Designer)

#	Date:	Description:
01	11/15/18	Peer review

Sheet Title: Landscape Plan

Date: 07/20/2018

Project Number: 168418009

Team By: CCC/fjs 7/26/2018

Checked By: JCC

Sheet Number: L. 1.0

Plotted By:Francisco Serrano Sheet Set:No Layout:L0-Site Layout November 15, 2018 02:49:09pm S:\CAD FILES\CO\2018 RC Projects\RC 378 Glen Ellyn IL\cad files\02 L1.0 11-15-2018 RC 378 Glen Ellyn IL Landscape plan.dwg

EXHIBIT "D"

1 FRONT ELEVATION
SCALE 1/8" = 1'-0"

1. BELDEN ROMAN BRICK: FINISH: MEDIUM RANGE, IRON SPOT

2. BORAL BRICK: FINISH: ALAMO MODULAR BRICK

3. PORTLAND CEMENT STUCCO: FINISH: 132 MOUNTAIN FOG

4. RAW STEEL WITH CLEAR COAT FINISH

5. BENJAMIN MOORE BLACK PAINT

6. KAWNEER ALUMINUM STOREFRONT SYSTEM FINISH: #40 DARK BRONZE

2 DRIVE-THRU ELEVATION
SCALE 1/8" = 1'-0"

Raising Cane's CHICKEN FINGERS

Restaurant
6800 Bishop R
Tele: 972-703-31

Store:

Raising Cane's E.R.D.
RC 378 Glen Ellyn
Roosevelt Rd & Main St,
Glen Ellyn, IL 60137
Prototype 2C

Designer's Information:

CSRS
IMAGINE SHAPE DELIVER

6767 Perkins Road Suite 200 Baton Rouge, LA 70808
Telephone: 225 769-0546 Fax: 225 767-0060
www.csrsonline.com

Set Control Information:	(ARCH use only)
Initial Setup Date:	09/28/2018
CSRS Project Manager:	Julie Olson

FOR REVIEW

Professional of Record:

Sheet Revisions: (sheet specific per Designer)

#	Date	Description

Sheet Title:

COLOR RENDERING

Project Number:

Drawn By: Julie Olson

Sheet Number:

00

3 REAR ELEVATION
SCALE 1/8" = 1'-0"

4 SIDE ENTRY ELEVATION
SCALE 1/8" = 1'-0"

Raising Cane's Chicken Fingers
Restaurant
6800 Bishop R
Tele: 972-703-31

Store:
Raising Cane's E.R.D.
RC 378 Glen Ellyn
Roosevelt Rd & Main St,
Glen Ellyn, IL 60137
Prototype 2C

Designer's Information:
CSRS
IMAGINE SHAPE DELIVER
6767 Perkins Road Suite 200 Baton Rouge, LA 70808
Telephone: 225 769-0546 Fax: 225 767-0060
www.csrsonline.com

Set Control Information:	(ARCH use only)
Initial Setup Date:	09/28/2018
CSRS Project Manager:	Julie Olson

FOR REVIEW

Professional of Record:

Sheet Revisions: (sheet specific per Designer)

#	Date	Description

Sheet Title:
COLOR RENDERING

Project Number:
Drawn By: Julie Olson
Sheet Number:
00

SITEMA BIT "E"

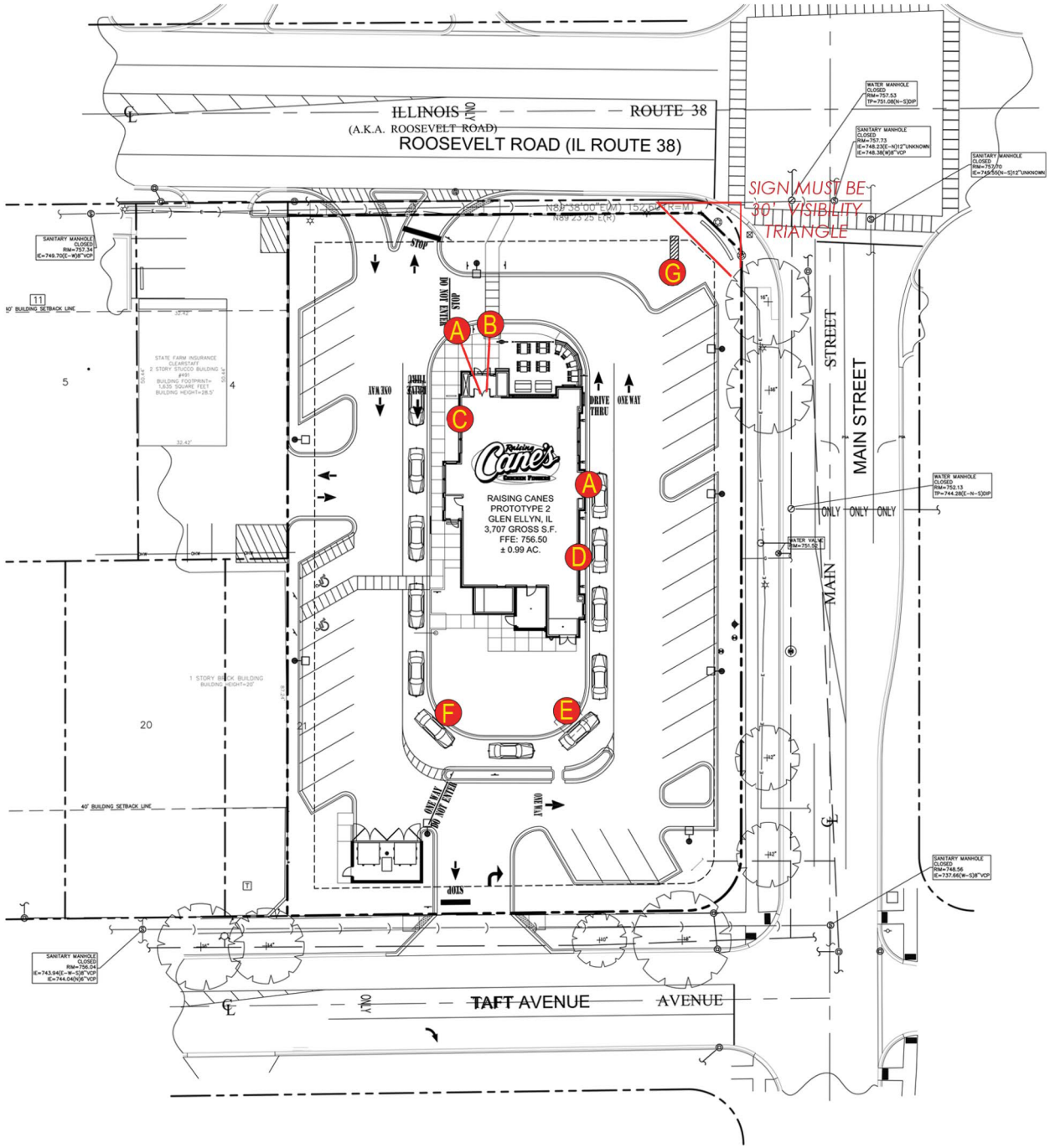

	QTY.	CODE	DESCRIPTION
A	2	WS-8FT	4 x 8 Wall Sign
B	1	ONS	Open Sign
C	1	CFNS	Chicken Fingers Sign
D	1	OLH	One Love Heart
E	1	DTMB	DT Menuboard & Awning
F	1	PSB	Presell Board
G	1	MON	Monument

	BLUE DOG	MURAL
No MSP/PUD noted during check		
Only allowed 1 wall sign per street front, max 3 signs (150 SF)		
Mural can't be painted		
Neon/LED border and flags are not allowed		
Art is subject to approval		
Variations require physical hardships per city		
Village will not allow mural or blue dog		
YES	☐	☐
NO	☑	☑

Raising Cane's Chicken Fingers

Location: Glen Ellyn, IL	AGI Rep: G.W.
Site ID: RC0378	AGI PM: Sarah McDougal
Date: 05/29/2018	Drawn by: M. Folden

This document is the sole property of AGI, and all design, manufacturing, reproduction, use and sale rights regarding the same are expressly forbidden. It is submitted under a confidential relationship, for a special purpose, and the recipient, by accepting this document assumes custody and agrees that this document will not be copied or reproduced in whole or in part, nor its contents revealed in any manner or to any person except for the purpose for which it was tendered, nor any special features peculiar to this design be incorporated in other projects.

AGI

ELEVATIONS

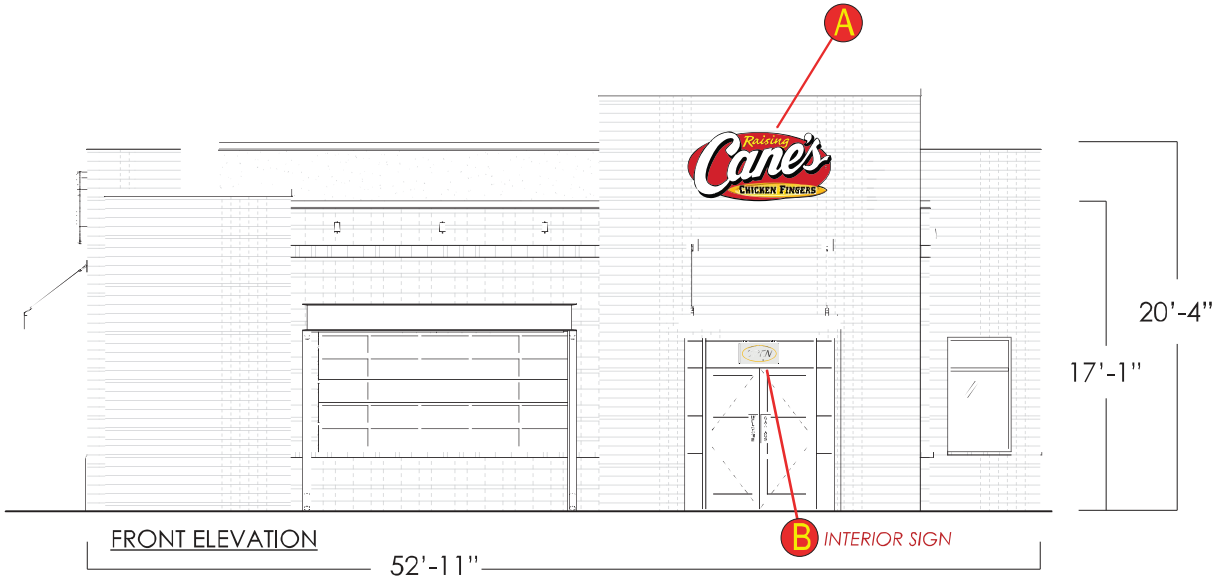

FRONT ELEVATION

	QTY.	CODE	DESCRIPTION
A	2	WS-8FT	4 x 8 Wall Sign
B	1	ONS	Open Sign
C	1	CFNS	Chicken Fingers Sign
D	1	OLH	One Love Heart
E	1	DTMB	DT Menuboard & Awning
F	1	PSB	Presell Board
G	1	MON	Monument

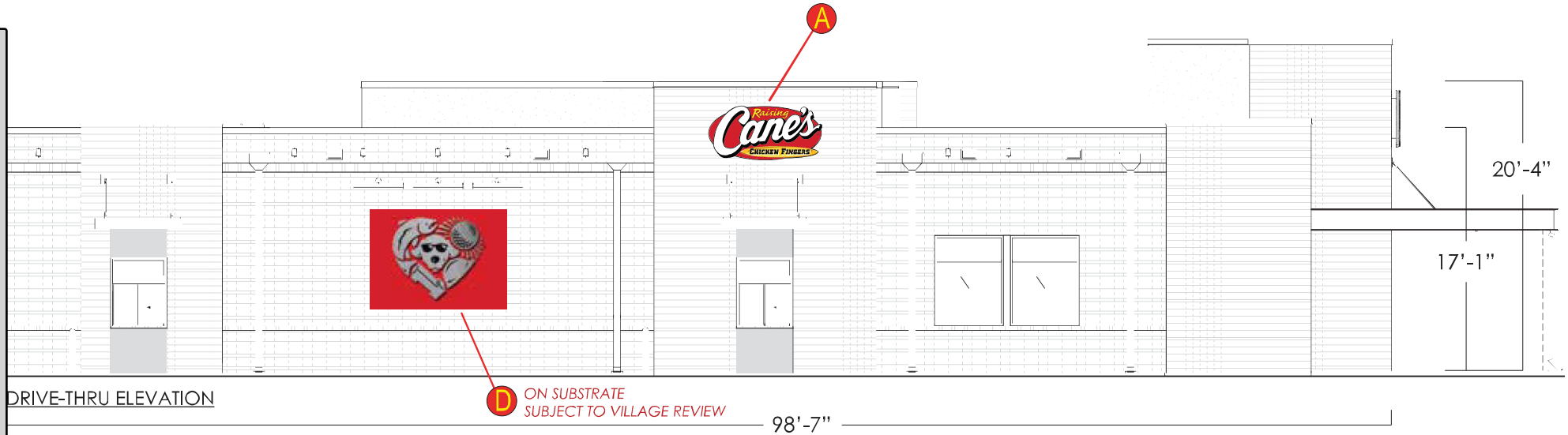

DRIVE-THRU ELEVATION

Scale: 3/32"=1'

Raising Cane's CHICKEN FINGERS

Location: Glen Ellyn, IL	AGI Rep: G.W.
Site ID: RC0378	AGI PM: Sarah McDougal
Date: 05/29/2018	Drawn by: M. Folden

This document is the sole property of AGI, and all design, manufacturing, reproduction, use and sale rights regarding the same are expressly forbidden. It is submitted under a confidential relationship, for a special purpose, and the recipient, by accepting this document assumes custody and agrees that this document will not be copied or reproduced in whole or in part, nor its contents revealed in any manner or to any person except for the purpose for which it was tendered, nor any special features peculiar to this design be incorporated in other projects.

AGI

ELEVATIONS

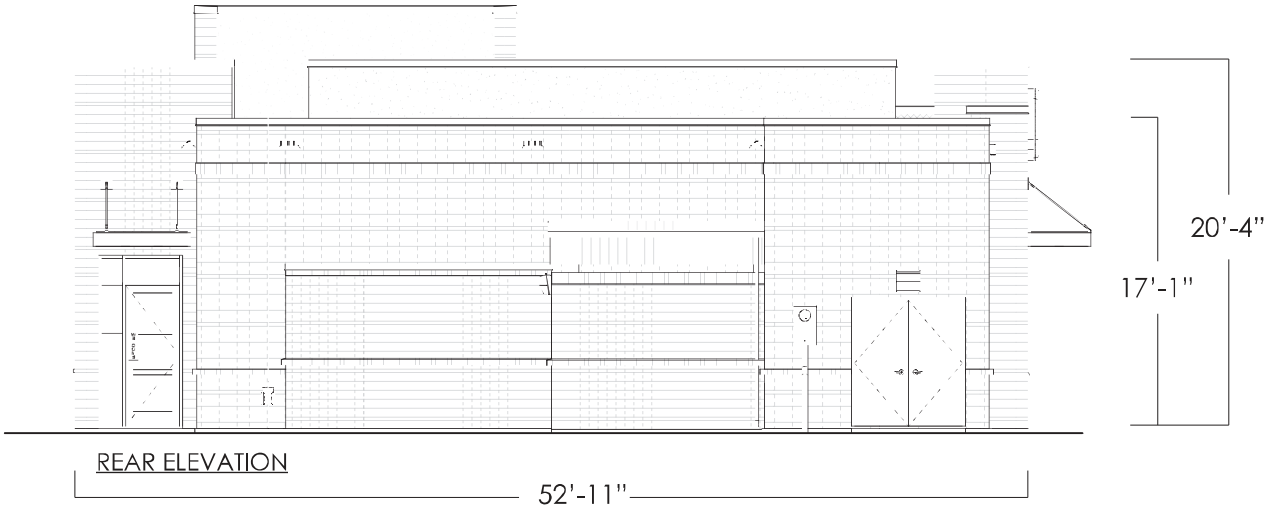

REAR ELEVATION

	QTY.	CODE	DESCRIPTION
A	2	WS-8FT	4 x 8 Wall Sign
B	1	ONS	Open Sign
C	1	CFNS	Chicken Fingers Sign
D	1	OLH	One Love Heart
E	1	DTMB	DT Menuboard & Awning
F	1	PSB	Presell Board
G	1	MON	Monument

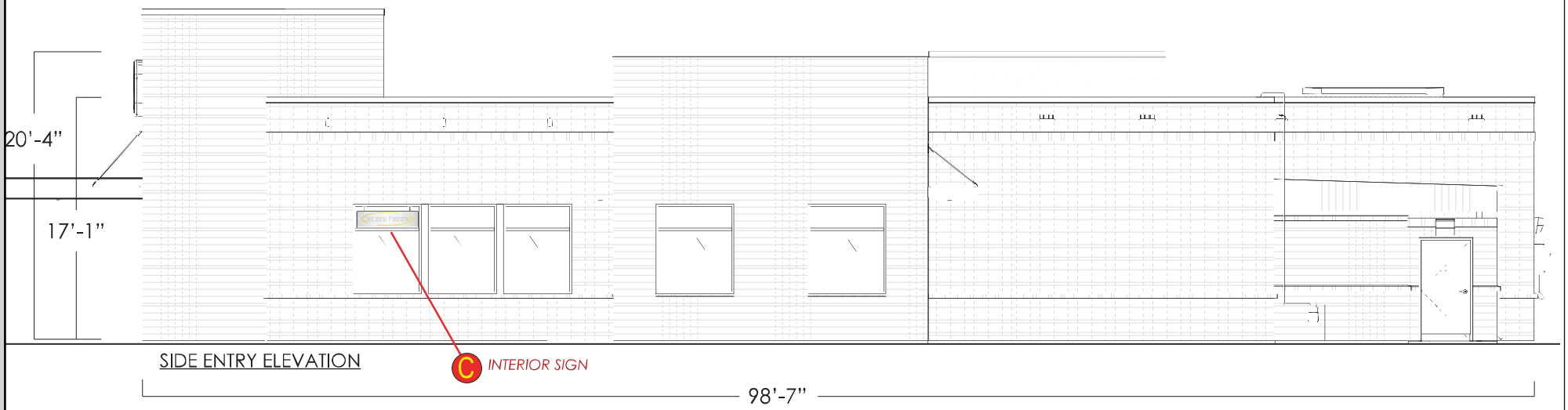

SIDE ENTRY ELEVATION

Scale: 3/32"=1'

Attachment: Sign Elevations - Exhibit "E"

Location: Glen Ellyn, IL	AGI Rep: G.W.	
Site ID: RC0378	AGI PM: Sarah McDougal	
Date: 05/29/2018	Drawn by: M. Folden	

This document is the sole property of AGI, and all design, manufacturing, reproduction, use and sale rights regarding the same are expressly forbidden. It is submitted under a confidential relationship, for a special purpose, and the recipient, by accepting this document assumes custody and agrees that this document will not be copied or reproduced in whole or in part, nor its contents revealed in any manner or to any person except for the purpose for which it was tendered, nor any special features peculiar to this design be incorporated in other projects.

CUTSHEET
4x8 Monument @ 11'-0" OAH

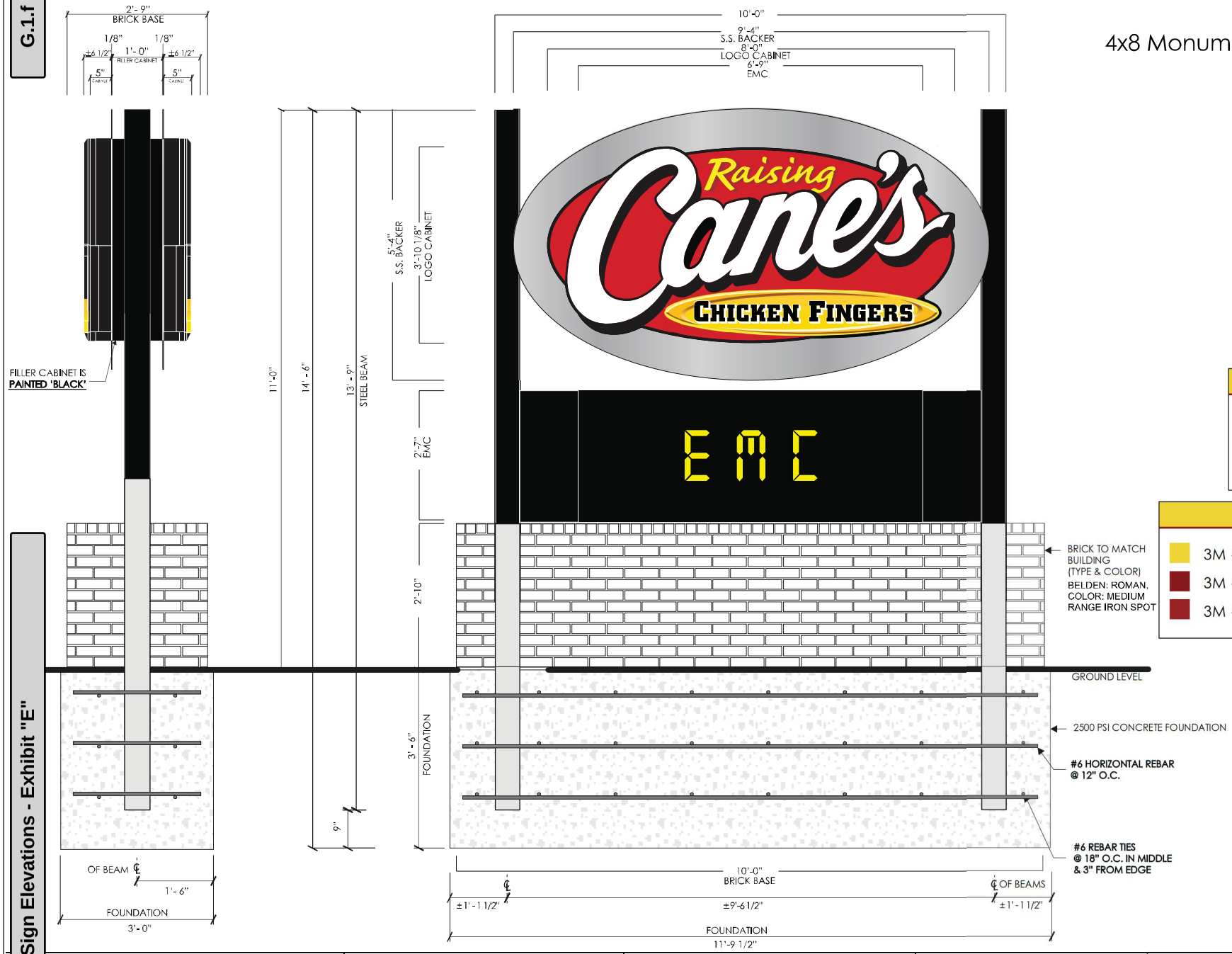

ELECTRICAL DATA	
VOLTAGE	120
AMPERAGE	1.52

COLOR CHART	
	3M #3630-15 'YELLOW'
	3M #3630-73 'RED'
	3M #3630-53 'CARDINAL RED'

Scale: 3/8"=1'

Location:	Glen Ellyn, IL	AGI Rep:	G.W.
Site ID:	RC0378	AGI PM:	Sarah McDougal
Date:	05/29/2018	Drawn by:	M. Folden

This document is the sole property of AGI, and all design, manufacturing, reproduction, use and sale rights regarding the same are expressly forbidden. It is submitted under a confidential relationship, for a special purpose, and the recipient, by accepting this document assumes custody and agrees that this document will not be copied or reproduced in whole or in part, nor its contents revealed in any manner or to any person except for the purpose for which it was tendered, nor any special features peculiar to this design be incorporated in other projects.

CUTSHEET
Monument-8FT

COPY & DROP SHADOW ARE AS FOLLOWS: **'RAISING' IS FIRST SURFACE APPLIED TRANSLUCENTVINYL 3M #3630-015 'YELLOW' DROP SHADOW IS FIRST SURFACE APPLIED TRANSLUCENTVINYL 3M #3630-53 'CARDINAL RED'**

BORDER IS **PAINTED 'BLACK'**

BACKGROUND IS **SURFACE APPLIED TRANSLUCENT VINYL 3M #3630-73 'RED'**

.150" THERMO FORMED CLEAR POLYCARBONATE FACE

REGISTER MARK IS **PAINTED 'BLACK'**

DOUBLE EMBOSSED LETTERS ARE **PAINTED SECOND SURFACE 'WHITE'**

EMBOSS AROUND LETTERS IS **PAINTED SECOND SURFACE 'BLACK'**

EMBOSSED SURFBOARD IS AS FOLLOWS:
- SIDES ARE **PAINTED TO MATCH PANTONE #109C 'YELLOW'**
- GRAPHICS ARE **SECOND SURFACE APPLIED DIGITAL PRINT**

CABINET ELEVATION

30.75

Square Footage

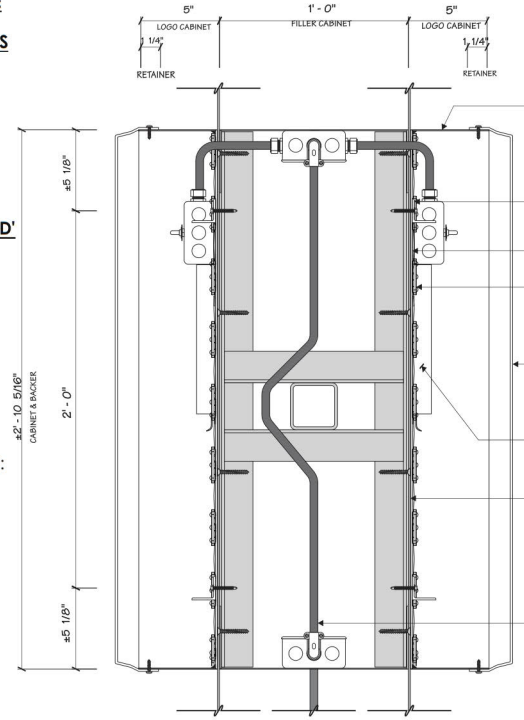

1/4 SECTION
3/16" = 1"

.063" ALUM. RETURNS WELDED TO ALUM. BACK PANEL

1 1/2" X 1 1/2" X 1/8" STEEL ANGLE BRACES WELDED TO ALUM. BACKER & MECHANICALLY FASTENED TO EXISTING FILLER CABINET W/ #10 X 2 1/2" LONG S.S.H.H. TEK SCREWS

1/8" ALUM. BACK PANEL

AGILIGHT PRO215-65K-G3 WHITE LED MODULES

.150" THERMO FORMED CLEAR POLYCARBONATE FACE MECHANICALLY FASTENED TO CABINET W/ #10 X 3/4" LONG S.S.P.H. SHEET METAL SCREWS

60 WATT LED POWER SUPPLY W/ J-BOX & DISCONNECT SWITCH

1/8" 304 S.S. BACKER PANEL MECHANICALLY FASTENED TO STEEL ANGLE W/ #10 X 1 1/2" LONG S.S.C.S. SHEET METAL SCREWS

1/2" X 6' LONG LIQUID TITE CONDUIT TO OWNER PROVIDED POWER SUPPLY

ELECTRICAL DATA	
VOLTAGE	120
AMPERAGE	1.8

COLOR CHART
3M #3630-15 'YELLOW'
3M #3630-73 'RED'
#3630-53 'CARDINAL RED'

Location: Glen Ellyn, IL	AGI Rep: G.W.	
Site ID: RC0378	AGI PM: Sarah McDougal	
Date: 05/29/2018	Drawn by: M. Folden	

This document is the sole property of AGI, and all design, manufacturing, reproduction, use and sale rights regarding the same are expressly forbidden. It is submitted under a confidential relationship, for a special purpose, and the recipient, by accepting this document assumes custody and agrees that this document will not be copied or reproduced in whole or in part, nor its contents revealed in any manner or to any person except for the purpose for which it was tendered, nor any special features peculiar to this design be incorporated in other projects.

CUTSHEET
WS-8FT

SIGNS ONLY ALLOWED
ON STREET FRONTS

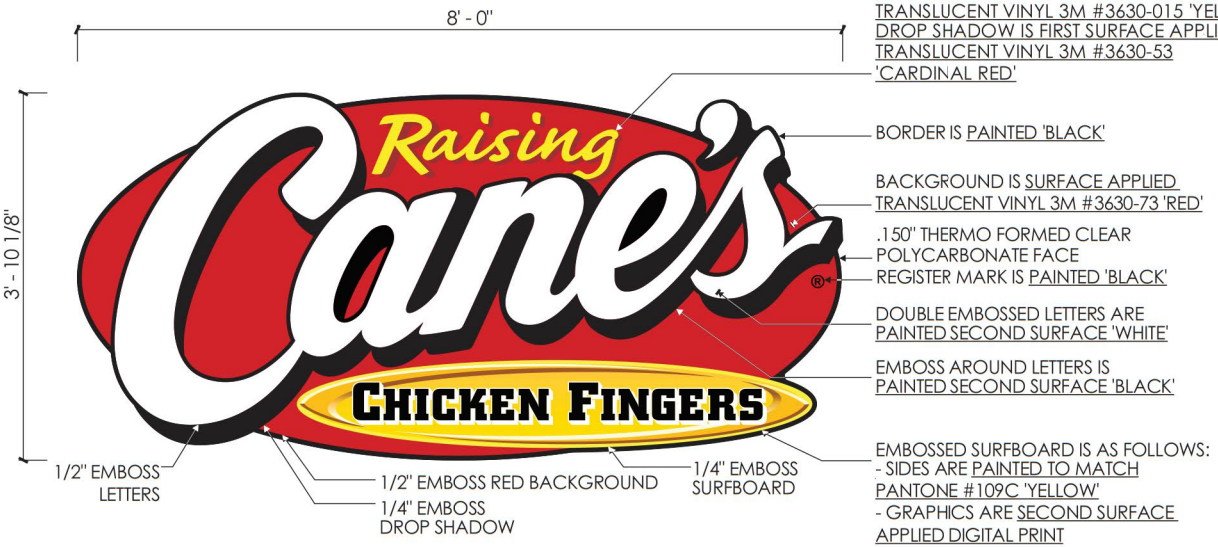

1/1 FRONT ELEVATION

30.75
Square Footage

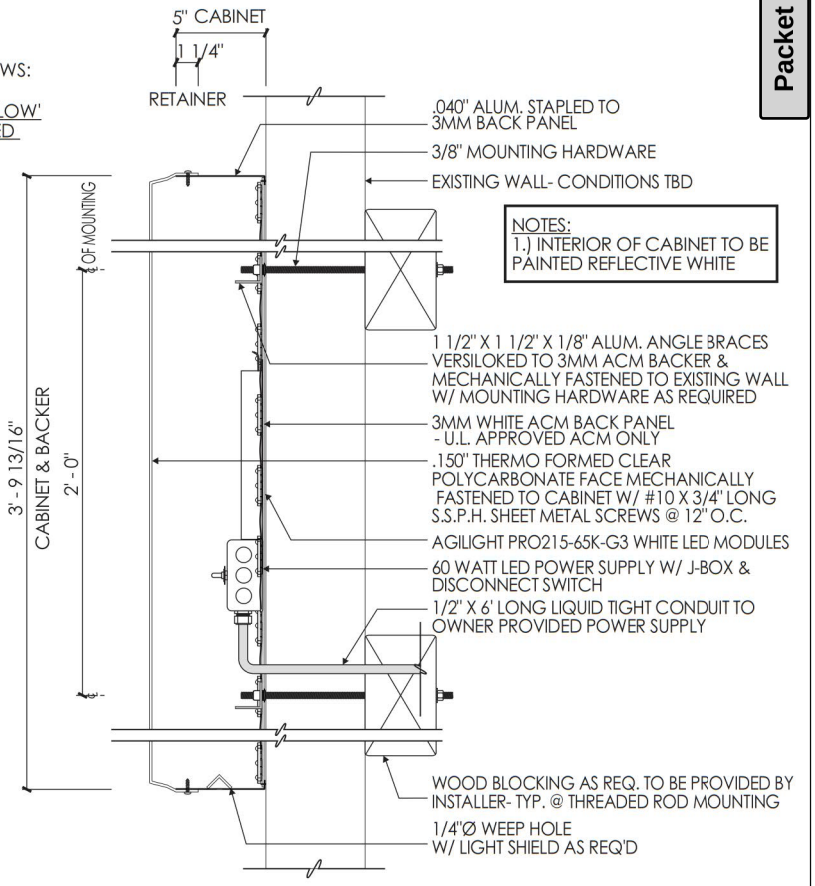

1/2 SECTION

ELECTRICAL DATA	
VOLTAGE	120
AMPERAGE	1.8

COLOR CHART
3M #3630-15 'YELLOW'
3M #3630-73 'RED'
3M #3630-53 'CARDINAL RED'

Location: Glen Ellyn, IL	AGI Rep: G.W.	
Site ID: RC0378	AGI PM: Sarah McDougal	
Date: 05/29/2018	Drawn by: M. Folden	

This document is the sole property of AGI, and all design, manufacturing, reproduction, use and sale rights regarding the same are expressly forbidden. It is submitted under a confidential relationship, for a special purpose, and the recipient, by accepting this document assumes custody and agrees that this document will not be copied or reproduced in whole or in part, nor its contents revealed in any manner or to any person except for the purpose for which it was tendered, nor any special features peculiar to this design be incorporated in other projects.

CUTSHEET
ONS (H)
INTERIOR SIGN
PIPE LENGTH TO BE VERIFIED

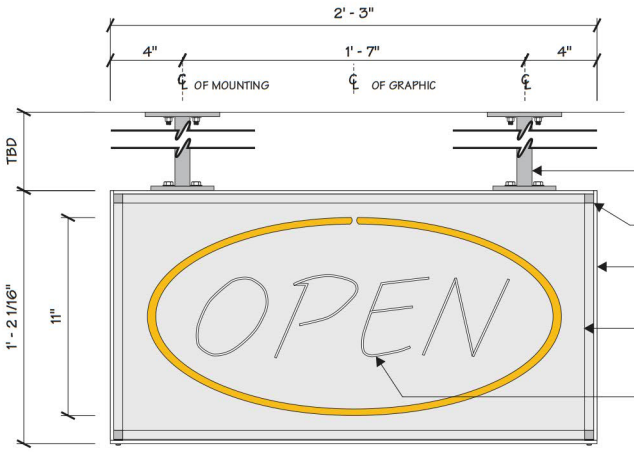

1/2" GALVANIZED STEEL PIPE & FILANGES W/MILL FINISH

1/2" X 1/2" ALUM. SQUARE TUBE FRAME W/MILL FINISH

3/16" CLEAR POLYCARBONATE CASE

NEON YELLOW OVAL IS 13MM NEON VOLTARC 'CLEAR BRITE YELLOW'

NEON LETTERS ARE 10MM NEON VOLTEC 'SNOW WHITE'

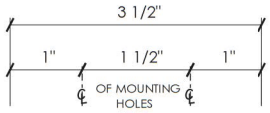

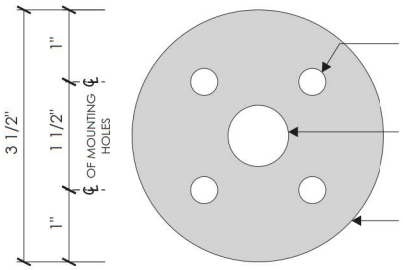

3/8" Ø THRU HOLE FOR 1/4" MOUNTING HARDWARE

THREADED HOLE FOR 1/2" Ø GALVANIZED STEEL PIPE

1/4" GALVANIZED STEEL PIPE FLANGE

PIPE FLANGE DETAIL

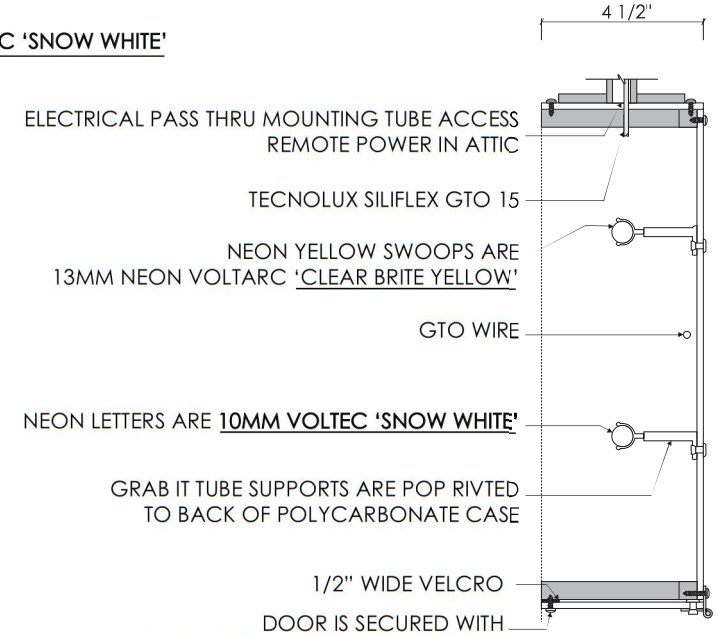

ELECTRICAL PASS THRU MOUNTING TUBE ACCESS REMOTE POWER IN ATTIC

TECNOLUX SILIFLEX GTO 15

NEON YELLOW SWOOPS ARE 13MM NEON VOLTARC 'CLEAR BRITE YELLOW'

GTO WIRE

NEON LETTERS ARE 10MM VOLTEC 'SNOW WHITE'

GRAB IT TUBE SUPPORTS ARE POP RIVTED TO BACK OF POLYCARBONATE CASE

1/2" WIDE VELCRO

DOOR IS SECURED WITH (2) #6 S.S.P.H. SHEET METAL SCREWS

NOTES:
1.) TRANSFORMER IS MOUNTED REMOTELY
2.) CONNECT 14 GA GROUND WIRE TO EACH MOUNTING FLANGE & TO GROUND LUG PROVIDED BY TRANSFORMER.
-CONNECT TRANSFORMER GROUND TO SERVICE GROUND AT PANEL BOX

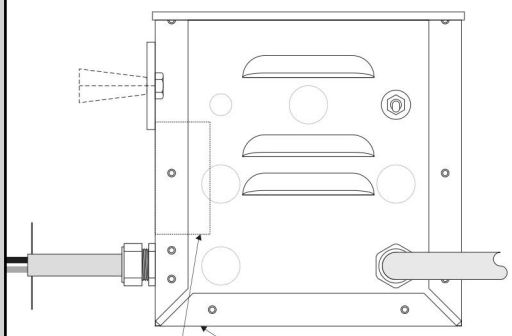

EXISTING TRANSFORMER BOX

LIGHTING COMPONENTS LC-2-12-3-C (2,000-12,000V 30 MA) OUNTED IN REMOVE TRANSFORMER BOX

BLOW UP DETAIL

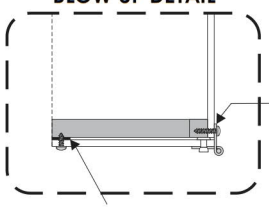

1 1/2" CONTINUOUS PIANO HINDGE IS POP RIVETED TO POLYCARBONATE BOTTOM & MECHANICALLY FASTENED TO POLYCARBONATE BACKER & ALUM. TUBE FRAME 2/ #6 S.S.P. H. SHEET METAL SCREWS

(3) STRIPS OF 1/2" WIDE BLACK VELCRO TO CLOSE POLYCARBONATE DOOR @ TUBE FRAME
-DOOR IS SECURED W/ (2) #6 S.S.P.H. SHEET METAL SCREWS

ELECTRICAL DATA	
VOLTAGE	120
AMPERAGE	2.1

Location: Glen Ellyn, IL	AGI Rep: G.W.	
Site ID: RC0378	AGI PM: Sarah McDougal	
Date: 05/29/2018	Drawn by: M. Folden	

This document is the sole property of AGI, and all design, manufacturing, reproduction, use and sale rights regarding the same are expressly forbidden. It is submitted under a confidential relationship, for a special purpose, and the recipient, by accepting this document assumes custody and agrees that this document will not be copied or reproduced in whole or in part, nor its contents revealed in any manner or to any person except for the purpose for which it was tendered, nor any special features peculiar to this design be incorporated in other projects.

CUTSHEET

Chicken Fingers Neon Sign

INTERIOR SIGN

PIPE LENGTH TO BE VERIFIED

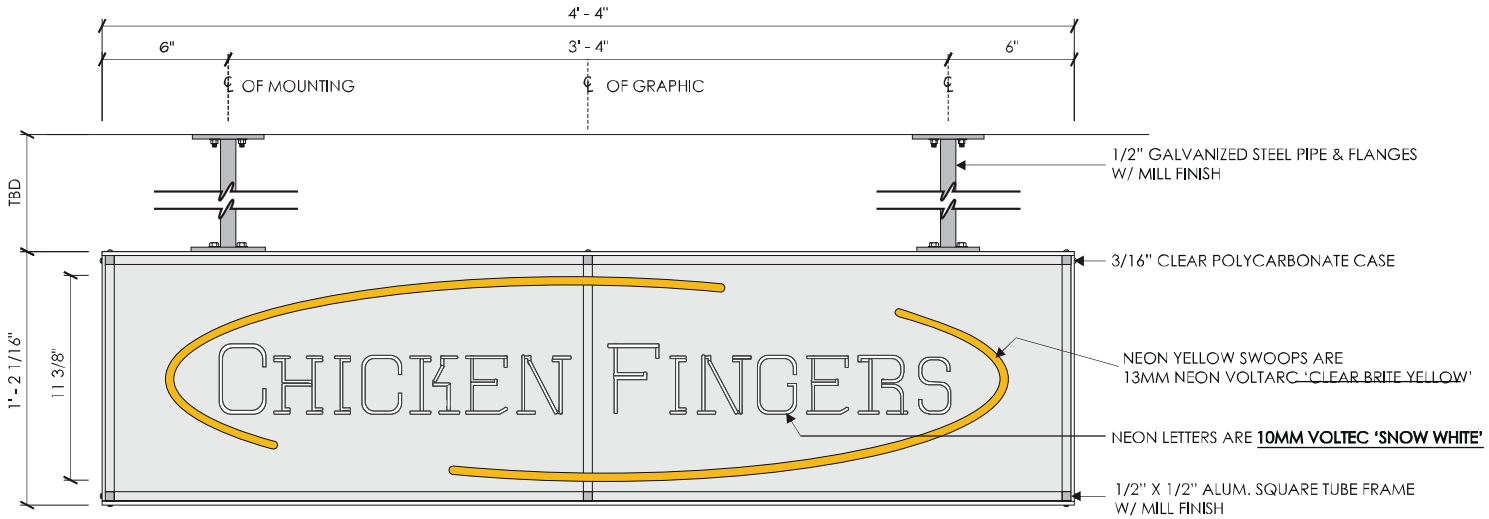

FRONT VIEW

NOTES:
1.) TRANSFORMER IS MOUNTED REMOTELY
2.) CONNECT 14 GA GROUND WIRE TO EACH MOUNTING FLANGE & TO GROUND LUG PROVIDED BY TRANSFORMER.
CONNECT TRANSFORMER GROUND TO DEVICE GROUND AT PANEL BOX

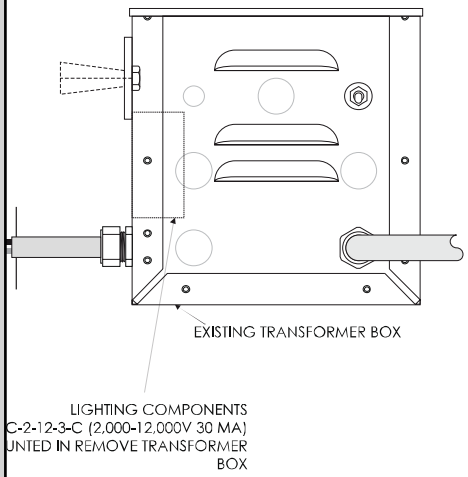

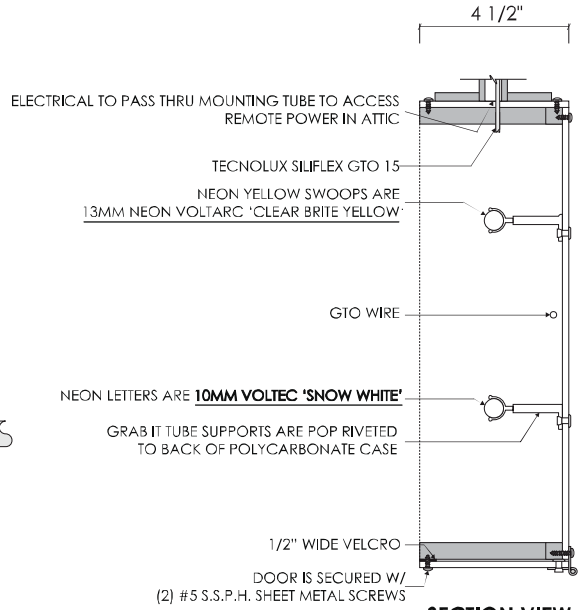

SECTION VIEW

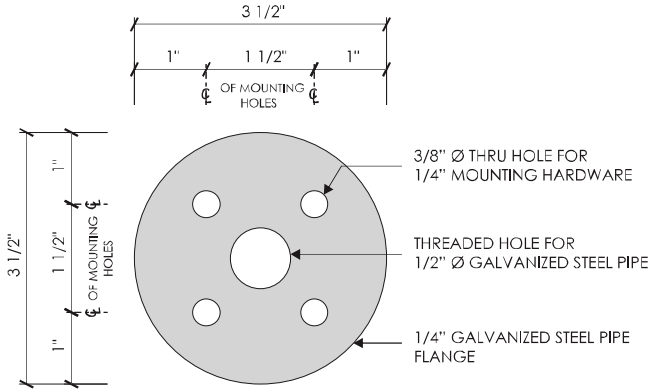

PIPE FLANGE DETAIL

BLOW UP DETAIL

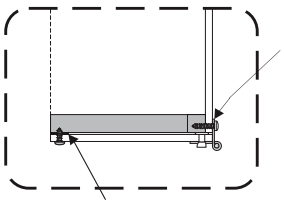

1 1/2" CONTINUOUS PIANO HINDGE IS POP RIVETED TO POLYCARBONATE BOTTOM & MECHANICALLY FASTENED TO POLYCARBONATE BACKER & ALUM. TUBE FRAME 2/ #6 S.S.P. H. SHEET METAL SCREWS

(3) STRIPS OF 1/2" WIDE BLACK VELCRO TO CLOSE POLYCARBONATE DOOR @ TUBE FRAME
-DOOR IS SECURED W/ (2) #6 S.S.P.H. SHEET METAL SCREWS

ELECTRICAL DATA	
VOLTAGE	120
AMPERAGE	2.1

Location: Glen Ellyn, IL	AGI Rep: G.W.
Site ID: RC0378	AGI PM: Sarah McDougal
Date: 05/29/2018	Drawn by: M. Folden

This document is the sole property of AGI, and all design, manufacturing, reproduction, use and sale rights regarding the same are expressly forbidden. It is submitted under a confidential relationship, for a special purpose, and the recipient, by accepting this document assumes custody and agrees that this document will not be copied or reproduced in whole or in part, nor its contents revealed in any manner or to any person except for the purpose for which it was tendered, nor any special features peculiar to this design be incorporated in other projects.

CUTSHEET

One Love Heart (on substrate)

SUBJECT TO VILLAGE REVIEW

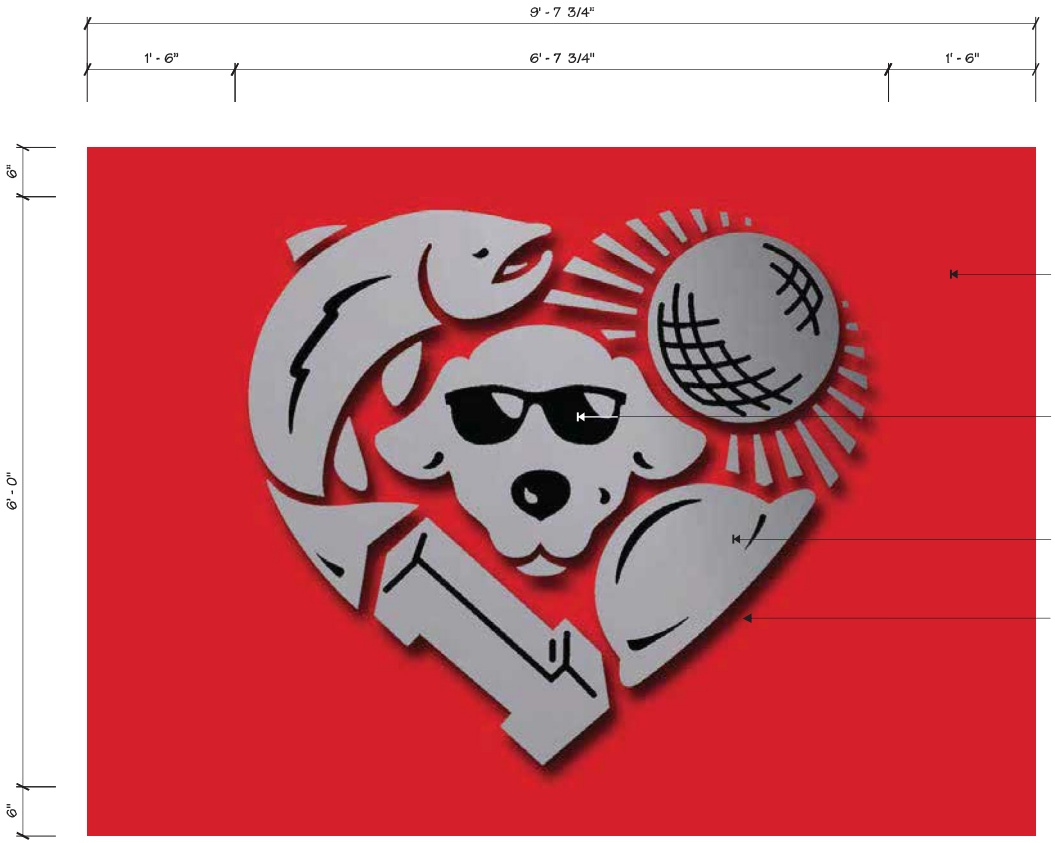

ONE LOVE HEART MOUNTED ON ALUMINUM SUBSTRATE

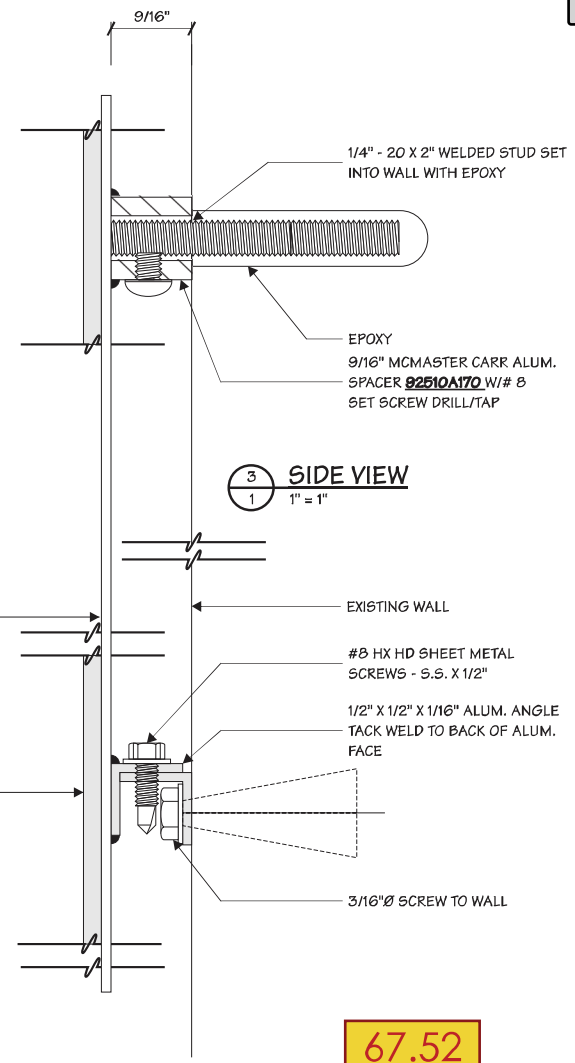

3/1 SIDE VIEW
1" = 1"

67.52

Square Footage

Location: Glen Ellyn, IL	AGI Rep: G.W.	
Site ID: RC0378	AGI PM: Sarah McDougal	
Date: 05/29/2018	Drawn by: M. Folden	

This document is the sole property of AGI, and all design, manufacturing, reproduction, use and sale rights regarding the same are expressly forbidden. It is submitted under a confidential relationship, for a special purpose, and the recipient, by accepting this document assumes custody and agrees that this document will not be copied or reproduced in whole or in part, nor its contents revealed in any manner or to any person except for the purpose for which it was tendered, nor any special features peculiar to this design be incorporated in other projects.

CUTSHEET
Lemonade Sign
INTERIOR SIGN
NOT VISIBLE OUTSIDE

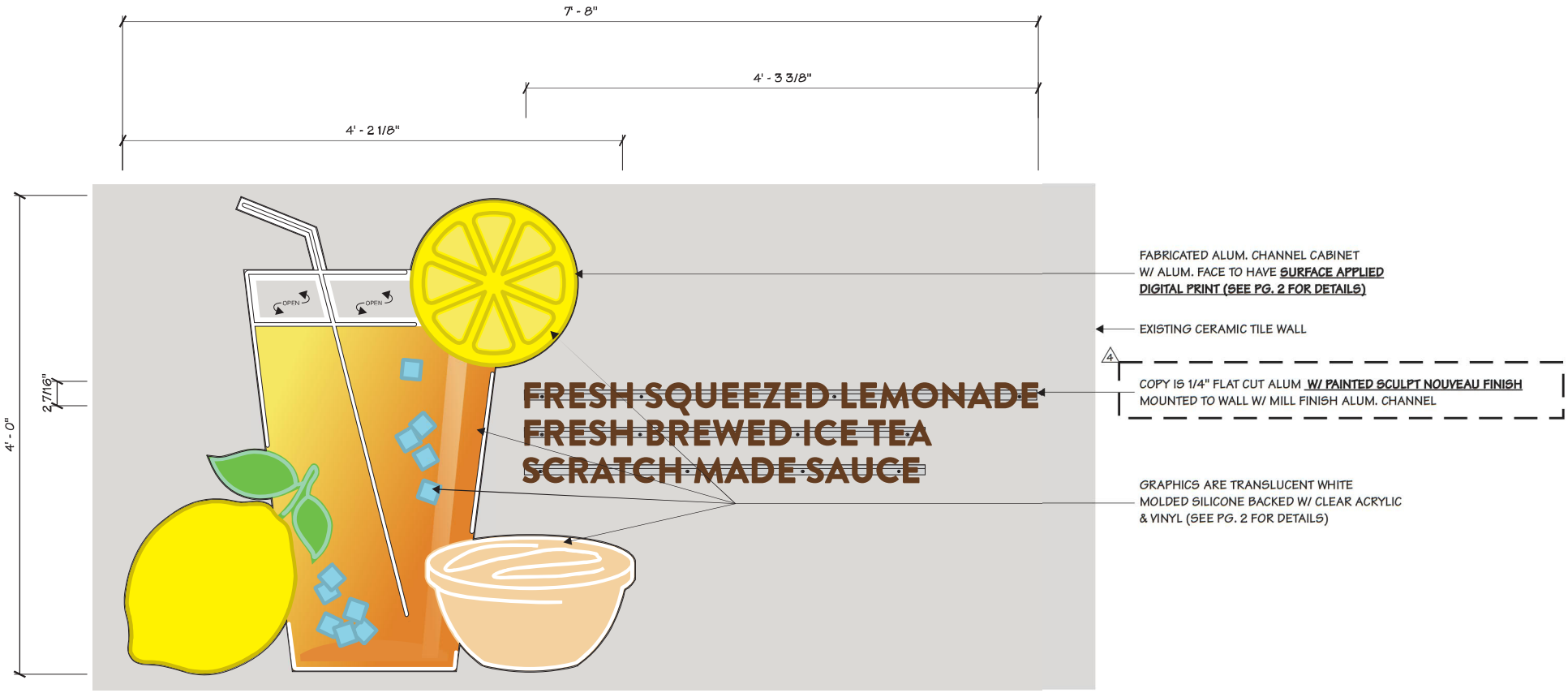

FRONT ELEVATION

Location: Glen Ellyn, IL	AGI Rep: G.W.	
Site ID: RC0378	AGI PM: Sarah McDougal	
Date: 05/29/2018	Drawn by: M. Folden	

This document is the sole property of AGI, and all design, manufacturing, reproduction, use and sale rights regarding the same are expressly forbidden. It is submitted under a confidential relationship, for a special purpose, and the recipient, by accepting this document assumes custody and agrees that this document will not be copied or reproduced in whole or in part, nor its contents revealed in any manner or to any person except for the purpose for which it was tendered, nor any special features peculiar to this design be incorporated in other projects.

CUTSHEET
Drive Thru Awning

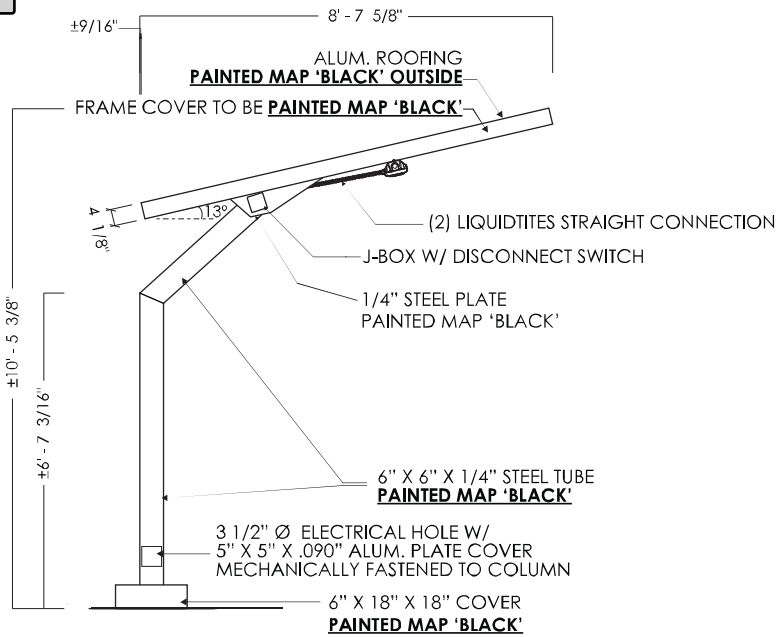

SIDE VIEW

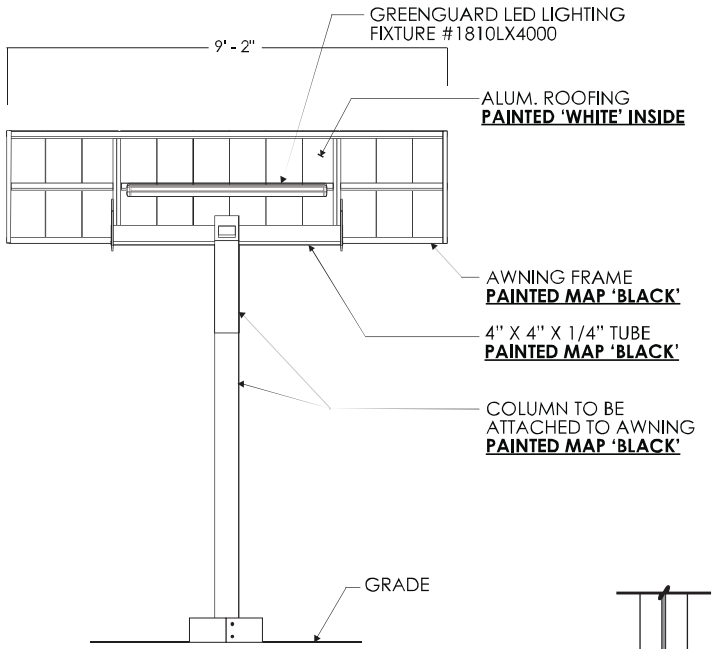

FRONT VIEW

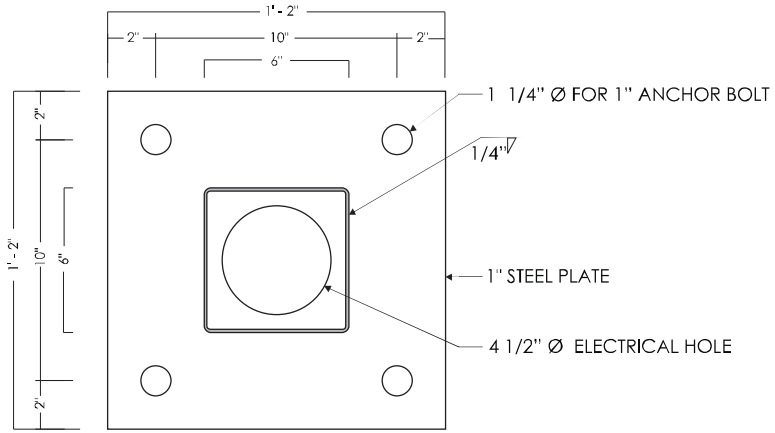

PLATE VIEW

ELECTRICAL DATA	
VOLTAGE	120
AMPERAGE	0.5

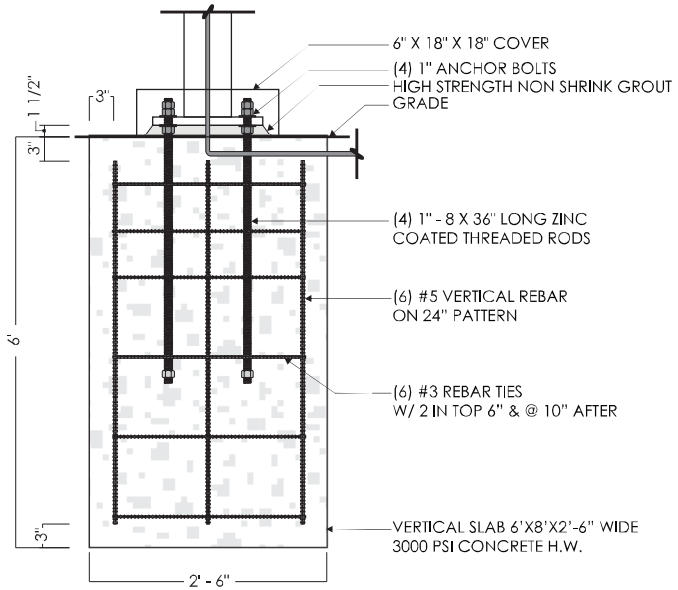

FOUNDATION

Location: Glen Ellyn, IL	AGI Rep: G.W.
Site ID: RC0378	AGI PM: Sarah McDougal
Date: 05/29/2018	Drawn by: M. Folden

This document is the sole property of AGI, and all design, manufacturing, reproduction, use and sale rights regarding the same are expressly forbidden. It is submitted under a confidential relationship, for a special purpose, and the recipient, by accepting this document assumes custody and agrees that this document will not be copied or reproduced in whole or in part, nor its contents revealed in any manner or to any person except for the purpose for which it was tendered, nor any special features peculiar to this design be incorporated in other projects.

CUTSHEET
Drive Thru Menu Board

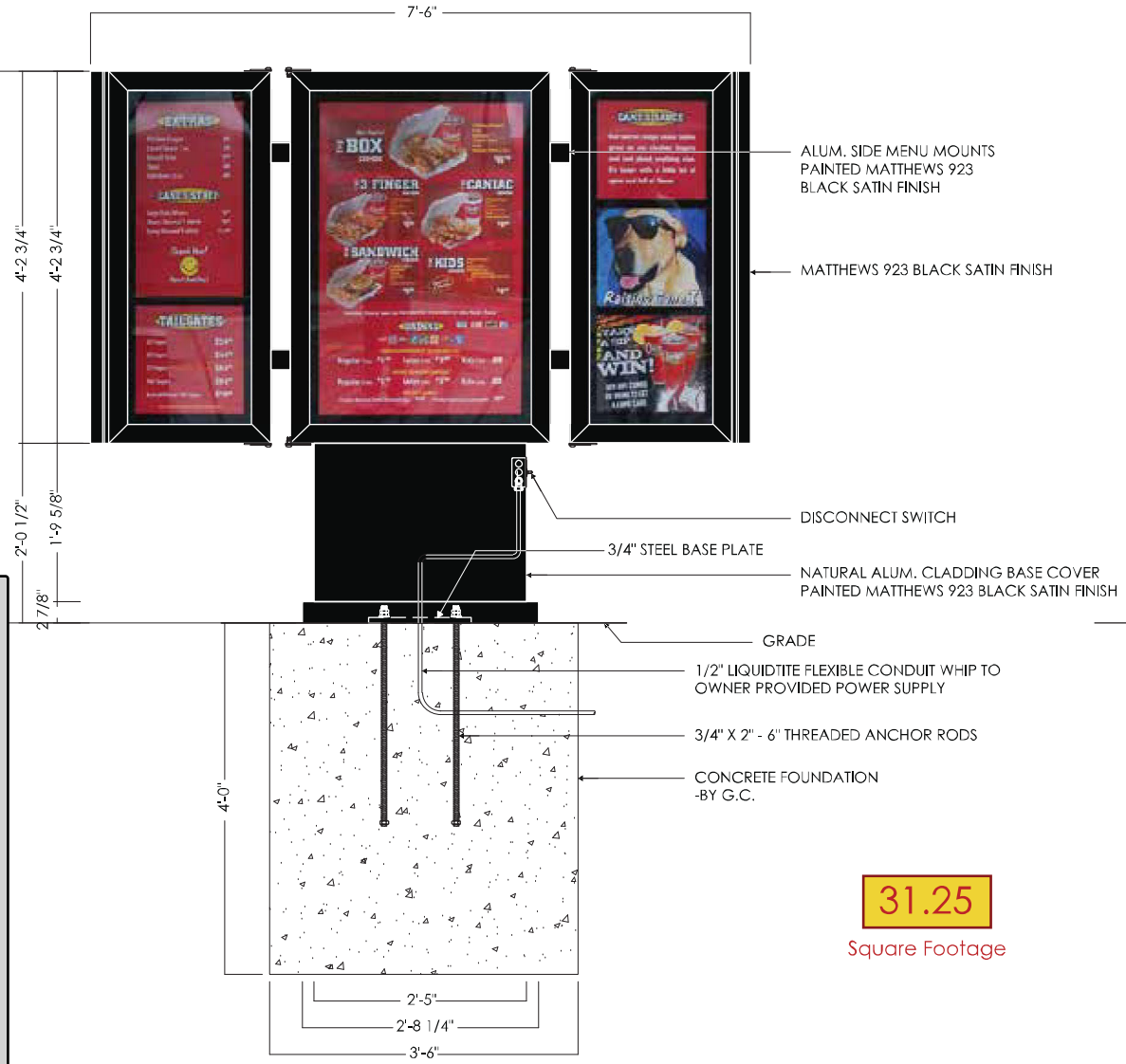

FRONT VIEW

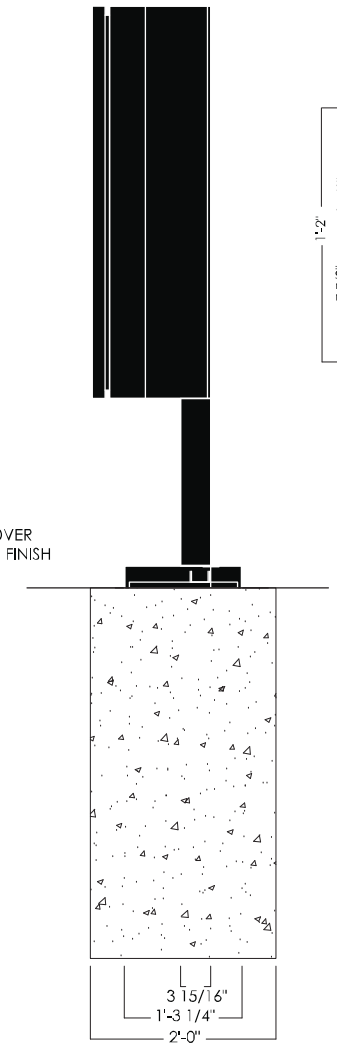

SIDE VIEW

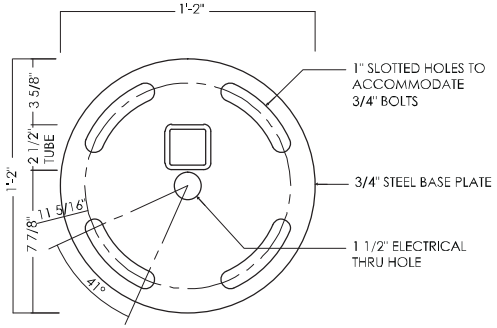

MATCH PLATE

31.25

Square Footage

Location: Glen Ellyn, IL	AGI Rep: G.W.	This document is the sole property of AGI, and all design, manufacturing, reproduction, use and sale rights regarding the same are expressly forbidden. It is submitted under a confidential relationship, for a special purpose, and the recipient, by accepting this document assumes custody and agrees that this document will not be copied or reproduced in whole or in part, nor its contents revealed in any manner or to any person except for the purpose for which it was tendered, nor any special features peculiar to this design be incorporated in other projects.
Site ID: RC0378	AGI PM: Sarah McDougal	
Date: 05/29/2018	Drawn by: M. Folden	

CUTSHEET
Pre Sell Board

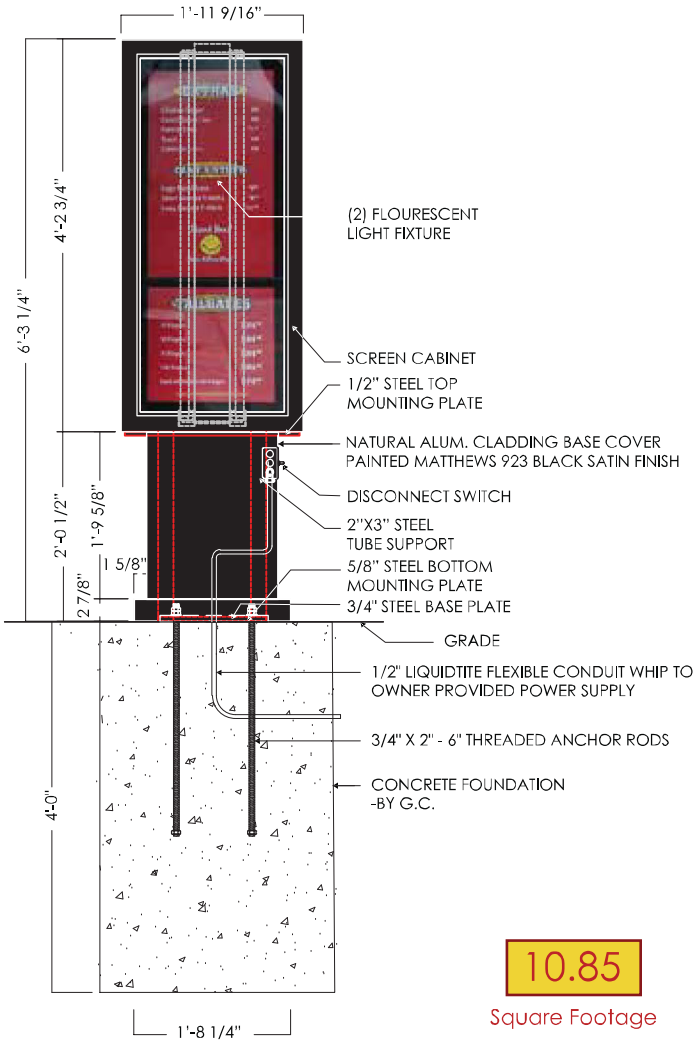

FRONT VIEW

10.85

Square Footage

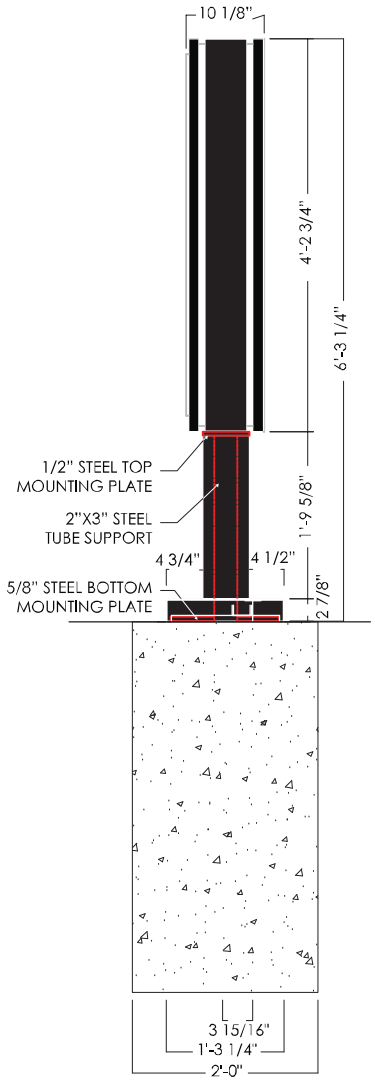

SIDE VIEW

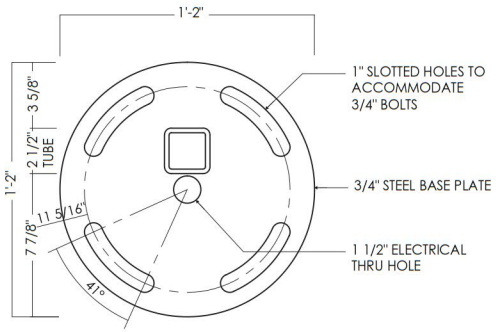

MATCH PLATE

Raising Cane's CHICKEN FINGERS

Location: Glen Ellyn, IL	AGI Rep: G.W.
Site ID: RC0378	AGI PM: Sarah McDougal
Date: 05/29/2018	Drawn by: M. Folden

This document is the sole property of AGI, and all design, manufacturing, reproduction, use and sale rights regarding the same are expressly forbidden. It is submitted under a confidential relationship, for a special purpose, and the recipient, by accepting this document assumes custody and agrees that this document will not be copied or reproduced in whole or in part, nor its contents revealed in any manner or to any person except for the purpose for which it was tendered, nor any special features peculiar to this design be incorporated in other projects.

AGI

CUTSHEET
Speaker Post

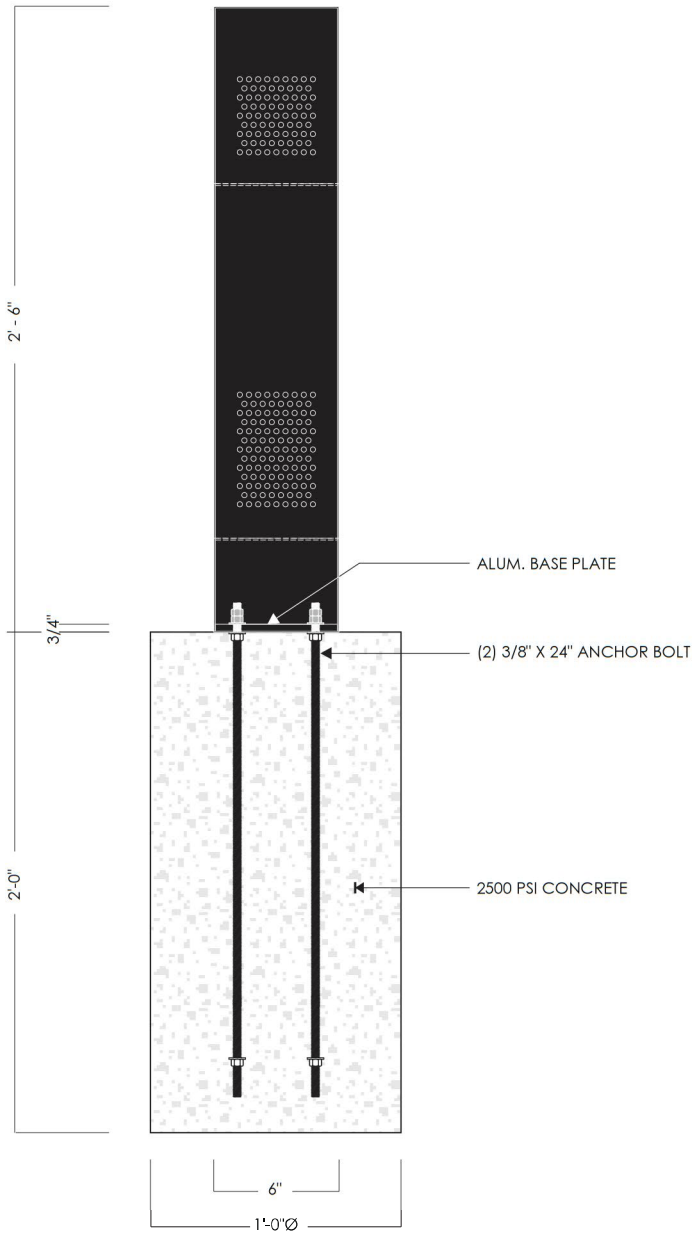

FRONT VIEW

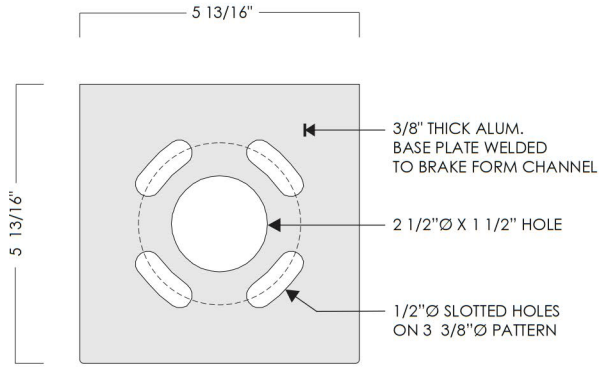

BASE PLATE

Raising Cane's Chicken Fingers	Location: Glen Ellyn, IL	AGI Rep: G.W.	This document is the sole property of AGI, and all design, manufacturing, reproduction, use and sale rights regarding the same are expressly forbidden. It is submitted under a confidential relationship, for a special purpose, and the recipient, by accepting this document assumes custody and agrees that this document will not be copied or reproduced in whole or in part, nor its contents revealed in any manner or to any person except for the purpose for which it was tendered, nor any special features peculiar to this design be incorporated in other projects.
	Site ID: RC0378	AGI PM: Sarah McDougal	AGI
	Date: 05/29/2018	Drawn by: M. Folden	

Attachment: Sign Elevations - Exhibit "E"

Raising Cane's CHICKEN FINGERS

Location: Glen Ellyn, IL	AGI Rep: G.W.
Site ID: RC0378	AGI PM: Sarah McDougal
Date: 05/29/2018	Drawn by: M. Folden

This document is the sole property of AGI, and all design, manufacturing, reproduction, use and sale rights regarding the same are expressly forbidden. It is submitted under a confidential relationship, for a special purpose, and the recipient, by accepting this document assumes custody and agrees that this document will not be copied or reproduced in whole or in part, nor its contents revealed in any manner or to any person except for the purpose for which it was tendered, nor any special features peculiar to this design be incorporated in other projects.

AGI

Attachment: Sign Elevations - Exhibit "E"

Location: Glen Ellyn, IL	AGI Rep: G.W.
Site ID: RC0378	AGI PM: Sarah McDougal
Date: 05/29/2018	Drawn by: M. Folden

This document is the sole property of AGI, and all design, manufacturing, reproduction, use and sale rights regarding the same are expressly forbidden. It is submitted under a confidential relationship, for a special purpose, and the recipient, by accepting this document assumes custody and agrees that this document will not be copied or reproduced in whole or in part, nor its contents revealed in any manner or to any person except for the purpose for which it was tendered, nor any special features peculiar to this design be incorporated in other projects.

Attachment: Photometric Plan - Exhibit "F" HIBIT "F"

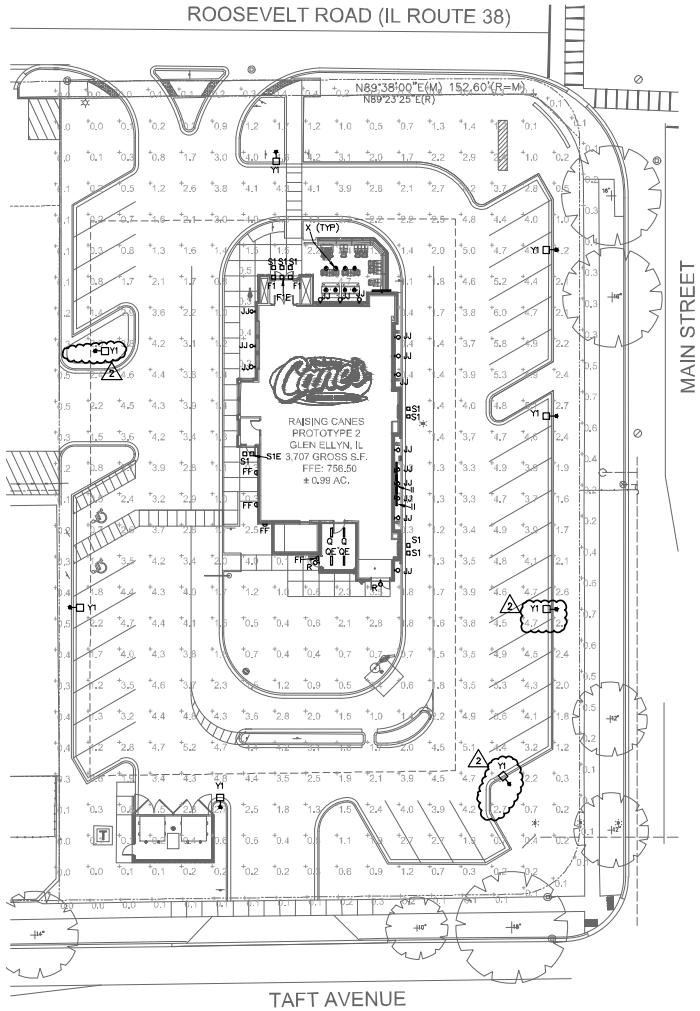

N

1 PHOTOMETRIC SITE PLAN

SCALE: 1" = 20'-0"

2 SITE LIGHTING PHOTOMETRIC DATA

ALL PHOTOMETRIC DATA IS TAKEN SHOWING HORIZONTAL FOOT CANDLES AT 3FT.

- MAX POLE HEIGHT FOR SITE: 23 FT
- AVERAGE FOOT CANDLES FOR SITE: 2.2FC
- MAXIMUM FOOT CANDLES FOR SITE: 6.0FC
- MAXIMUM FOOT CANDLES AT PERIMETER: 0.5FC

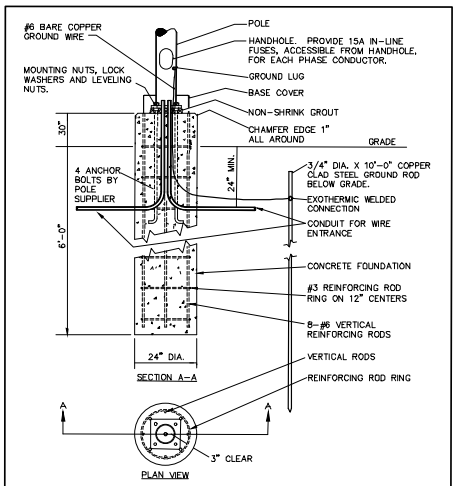

3 POLE FOUNDATION DETAIL FIXTURE TYPE "Y"

NOT TO SCALE

4 LIGHTING FIXTURE SCHEDULE (EXTERIOR)

2

F1	MANUF/NUMBER:	ACUITY BRANDS/LDN6SQ27/15MVOLTEZ1HSGU/LS6AR-LSS-TRIM
	VOLTAGE:	120
	FINISH:	CLEAR SATIN
	LAMP:	QUANTITY- 1 WATTS- 20 TYPE- LED
	REMARKS:	6" LED RECESSED SQUARE CAN LIGHT. SHALL BE ENERGY STAR RATED, AND HAVE 0-10V DIMMING. COLOR TEMPERATURE SHALL BE 2700K.
F1E	MANUF/NUMBER:	ACUITY BRANDS/LDN6SQ27/15MVOLTEZ1ELHSGU/LS6AR-LSS-EL-TRIM
	VOLTAGE:	120
	FINISH:	CLEAR SATIN
	LAMP:	QUANTITY- 1 WATTS- 20 TYPE- LED
	REMARKS:	6" LED RECESSED SQUARE CAN LIGHT. SHALL BE ENERGY STAR RATED, AND HAVE 0-10V DIMMING. COLOR TEMPERATURE SHALL BE 2700K. PROVIDE WITH BATTERY BACKUP TO PRODUCE 1400 LUMENS.
Q	MANUF/NUMBER:	LITHONIA/DMW2-L24-3000LM-ACL-MD-MVOLT-GZ1-35K-80-MSI10NWL
	VOLTAGE:	120
	FINISH:	WHITE
	LAMP:	QUANTITY- - WATTS- 32 TYPE- LED
	REMARKS:	2'-0" ENCLOSED, GASKETED LED STRIP FIXTURE WITH REINFORCED FIBERGLASS HOUSING. FIXTURE SHALL BE LISTED FOR WET LOCATIONS. PROVIDE WITH WEATHER PROOF OCCUPANCY SENSOR.
QE	MANUF/NUMBER:	LITHONIA/DMW2-L24-3000LM-ACL-MD-MVOLT-GZ1-35K-80-PS1050-MSI10NWL
	VOLTAGE:	120
	FINISH:	WHITE
	LAMP:	QUANTITY- - WATTS- 32 TYPE- LED
	REMARKS:	2'-0" ENCLOSED, GASKETED LED STRIP FIXTURE WITH REINFORCED FIBERGLASS HOUSING. PROVIDE BATTERY BACKUP TO ACTIVATE IN THE EVENT OF A POWER OUTAGE. FIXTURE SHALL BE LISTED FOR WET LOCATIONS.PROVIDE WITH WEATHER PROOF OCCUPANCY SENSOR.
R	MANUF/NUMBER:	ATLAS/WLMFC43LED
	VOLTAGE:	120
	FINISH:	BLACK
	LAMP:	QUANTITY- 1 WATTS- 34 TYPE- LED
	REMARKS:	LED WALL PACK WITH DIE CAST ALUMINUM HOUSING, SPECULAR REFLECTOR AND BOROSILICATE GLASS REFRACTOR. FIXTURE SHALL BE LISTED FOR WET LOCATIONS.
S1	MANUF/NUMBER:	ACUITY BRANDS/EVO-SQ-27-15-6AR-LSS-MVOLT-EZ1
	REMARKS:	SUPPLIED WITH AWNING. CONTRACTOR SHALL CONNECT TO CIRCUIT INDICATED ON PLAN.
S1E	MANUF/NUMBER:	ACUITY BRANDS/EVO-SQ-27-15-6AR-LSS-MVOLT-EZ1-EL
	REMARKS:	SUPPLIED WITH AWNING. CONTRACTOR SHALL CONNECT TO CIRCUIT INDICATED ON PLAN, AND PROVIDE A BATTERY BACKUP MOUNTED ABOVE THE TRUSSES ON THE INTERIOR TO POWER THE LIGHT IN THE CASE OF A POWER OUTAGE.
X	MANUF/NUMBER:	WAC LIGHTING/WP-LED415-30-ABK
	VOLTAGE:	120
	FINISH:	BLACK
	LAMP:	QUANTITY- 1 WATTS- 24 TYPE- LED
	REMARKS:	3" LED PENDANT MOUNTED CYLINDER WITH CLEAR SATIN REFLECTOR AND BLACK HOUSING. SHALL BE ENERGY STAR RATED, AND HAVE 0-10V DIMMING. COLOR TEMPERATURE SHALL BE 3000K.
Y1	MANUF/NUMBER:	LITHONIA/KAX1-LED-P4-50K-R3-MVOLT-HS
	VOLTAGE:	208
	FINISH:	DARK BRONZE
	LAMP:	QUANTITY- 1 WATTS- 150 TYPE- LED
	REMARKS:	LED POLE MOUNTED FIXTURE WITH SEGMENTED ALUMINUM OPTICS AND HOUSE SIDE SHIELD. 26' TALL SQUARE STRAIGHT STEEL POLE, LITHONIA SSS-26-5G-DM19-DDB
FF	MANUF/NUMBER:	ACUITY BRANDS/KAXW-P2-30K-R3-MVOLT-DDBXD
	VOLTAGE:	120
	FINISH:	BLACK
	LAMP:	QUANTITY- 1 WATTS- 32 TYPE- LED
	REMARKS:	LED WALL MOUNTED WALL WASH LUMINAIRE. COORDINATE MOUNTING HEIGHT AND EXACT LOCATIONS WITH ARCHITECTURAL ELEVATIONS.
II	MANUF/NUMBER:	CSL/RLMSUB-0117/RLMSUB-0118
	VOLTAGE:	120
	FINISH:	BLACK
	LAMP:	QUANTITY- 1 WATTS- 20 TYPE- LED
	REMARKS:	LED WALL MOUNTED SIGN LIGHTER. COORDINATE ELEVATION AND LOCATION WITH ARCHITECTURAL ELEVATIONS.
JJ	MANUF/NUMBER:	MODERN FORMS/MF-MAST-BL
	VOLTAGE:	120
	FINISH:	BLACK
	LAMP:	QUANTITY- 1 WATTS- 5 TYPE- LED
	REMARKS:	LED WALL MOUNTED ACCENT LIGHT. COORDINATE ELEVATION AND LOCATION WITH ARCHITECTURAL ELEVATIONS.

AST ENGINEERS
8417 Kelwood Avenue
Baton Rouge, Louisiana 70806
225.926.5600
www.astengineers.us
ILL NOES REGISTRATION NUMBER / 84007325-0002

Raising Cane's Chicken Fingers
Restaurant Support
6800 Distrib Road
Tele: 972-708-3100

Prototype Issue Date: 06/15/2018

Store:

RAISING CANE'S #378
ROOSEVELT RD. & MAIN ST.
GLEN ELLYN, IL

Designer's Information:

CSRS
IMAGINE SHAPE DELIVER
6767 Perkins Road Suite 200 Baton Rouge, LA 70808
Telephone: 225 769-0546 Fax: 225 767-0060
www.csrsonlinc.com

Prototype Update Phase: 3.5

Update Issue Date: 06/15/2018

CSRS Project Manager: Update

FOR REVIEW

Professional of Record:

Sheet Revisions: (sheet specific per Designer)

#	Date	Description
1	2018-10-01	REVIEW COMMENTS
2	2018-11-08	SITE CHANGES

Sheet Title:

PHOTOMETRIC SITE PLAN

Current Set Update: 3.5

Update Release Date: 06/15/2018

Sheet Number:

E1.1

MEMORANDUM

TO: John Sterrett, Village Planner

FROM: Rich Daubert, Professional Engineer
Bob Minix, Part-Time Professional Engineer

DATE: October 26, 2018

SUBJECT: PRV – 495-499 Roosevelt Road – Raising Cane's
Public Works Review No. 2 of Concept Plans

A package of materials in support of the subject project was received at Public Works on October 5, 2018 including:

- Narrative, Operations Information and various plans, elevations and renderings prepared by CSRS Architects with written material dates of October 2, 2018
- Raising Cane's Brand Book with a cover page revision date of 10/1/2018
- Plat of Easement prepared by Compass Surveying, dated 9/28/2018
- Final Plat of Subdivision of Raising Cane's of Glen Ellyn prepared by Compass Surveying, with a revision date of 9/26/2018
- Various drainage related exhibits prepared by Kimley – Horn with Sheet EX-4 having a revision date of 10/2/2018
- Preliminary Civil Construction Plans prepared by Kimley – Horn with a revision date of 10/2/2018
- Comment response letter to Public Works review No. 1 prepared by Kimley – Horn, dated October 2, 2018
- Plumbing Fixture Load calculation table dated 9/19/2018 received from Kimley – Horn via email on 10/16/2018

The submittal materials relating to Public Works were reviewed. In our opinion, the project elements pertaining to Public Works' interests and concerns are satisfactory for concept-level plans.

Our determination is subject to the understanding that the overhead utility wires crossing over Main Street and adjacent to the east side of Main Street between Taft and Roosevelt Road will be included in the undergrounding work to be performed by the developer as part of the project. These wires are shown to be removed on Sheet C4.0, Demolition Plan. **If the scope of the undergrounding work to be performed by the developer changes, Public Works respectfully requests final approval be deferred until satisfactory resolution of the issue is obtained.** Staff is grateful for the invitation to the October 2, 2018 gathering with utility companies and commends the project engineering team for successfully arranging the meeting.

The following comments are provided in response to the submittal. **A re-submittal of the concept plans is not required if no changes in utility undergrounding are proposed.** Other items can be addressed with a permit-stage submittal of plans and project information. It should be noted that a detailed review of every civil-site plan sheet has not yet been performed, particularly detail and note sheets; such review will be performed with the building permit plans.

1. General
    a. While IDOT has completed a first review of the project, we also disclaim that the applicant must address all IDOT related comments as the project moves forward through the permit stage. IDOT did comment that the applicant shall revise the plans to incorporate sidewalk along the site's frontage of IL-38. Based on IDOT more recent position for permitting of development projects, the applicant will be required to install an ADA compliant concrete sidewalk along IL-38. IDOT has indicated that they oppose the use of bricks in pedestrian accessible routes (PAR) but have allowed them outside of the PAR.
    b. Public Works defers to Planning & Development but does feel that the corner streetscape elements should be upgraded around the entire southwest corner of the intersection of Main and IL-38. We have required other developments to make upgrades to the streetscape including the installation of decorative aluminum fencing and brick pavers. The improvements should be united across the quadrant of the intersection but also blend into the streetscape improvements on the opposing corners of the intersection.

2. Plat of Easement – Public Works will defer to the Planning and Development Department for final and detailed comments but notes the following:
    a. The general configuration of easements is satisfactory, although certain portions of the public utility and drainage easements in the southwest part of the development may have to be expanded to accommodate the design and placement of utility undergrounding elements.
    b. PW staff is unsure of the wording for the easements, suggesting the language used for the 375-395 Roosevelt Road PUD may be preferred.
    c. The sole Village component to be placed in the PU & DE will be the fire hydrant and piping up to and including the valve downstream of the hydrant. The restoration requirements for the Village should not differ from those of any other utility.
    d. The 5' width of the permanent landscape easement in the northeast part of the development should be shown, similar to the presentation on the Plat of Subdivision.

3. Final Plat of Subdivision – Public Works will defer to the Planning and Development Department for final and detailed comments but notes the following:
    a. PW staff apologizes for the poor phrasing of a previous comment regarding needed certificates. The Plan Commission Certificate is required – the intent of the previous comment was to indicate the wording originally shown for this certificate was incorrect. Other certificates appear to be required. It is recommended that a copy of the 375-395 Roosevelt Road PUD be used as a guide for inclusion of all needed certificates.

4. Plumbing Fixture Load Table
    a. The spreadsheet provided by the design team indicates a total WSFU count of 83. This translates to an incoming pipe size of 2" for the potable water supply paired with a 1-1/2" water meter and RPZ. Public Works staff takes no exception to the information presented in the table.

5. Cover Sheet
    a. Please note that the Contractor shall contact the State's Electrical Contractor, Meade Electric, for the location of traffic signal equipment within the State ROW. The contractor shall call 773-287-7672 with a valid JULIE dig # provided. Please also confirm whether or not IDOT will require that the Contractor take maintenance of the traffic signal at Main/Roosevelt as part of the project.
    b. Revise the last names of the Planning & Development Director to "Springer" and the Roadway Authority (Glen Ellyn, IL) to "Daubert".

6. ALTA Survey
    a. Specify the scale below the scale bar.

7. Demolition Plan – Sheet C4.0
    a. As previously noted, this is a key sheet for depiction of the utility undergrounding scope of work for the project. PW staff is relying on this drawing in defining the scope and commitment of the developer regarding this work.

8. Site Keynote Plan – Sheet C5.0
    a. The Taft Avenue entryway requires modification. The public sidewalk should be continuous through the driveway. Curbing is not required between the curb and the sidewalk. A recommended configuration of a concrete driveway approach is attached hereto.
    b. Please note our previous comments relating to the installation of sidewalk (in lieu of brick pavers) in the PAR along IL-38. The applicant is proposing to install brick pavers along IL-38 and "match" the Village's existing design. While this may be approved outside of the PAR, the existing pavers are no longer available so a new design will need to be reviewed/approved should the applicant install brick pavers outside of the PAR. Also as noted previously, the improvements should wrap around the corner to ensure uniformity. Replacement of the vertical streetscape element (retaining wall) may be more practical than repair.

9. Striping & Signage Plan – Sheet C5.2
    a. Additional R5-1 signs are recommended to deter traffic from the cross access drive (to the westerly property) from turning left as they enter the site from the west (deter them from turning left towards Roosevelt). No left turn (R3-2) signs may also be beneficial at this location as well as adjacent to the "Drive Thru "Right"" sign within the island south of the drive through lane.

10. Grading and Drainage Plan – Sheet C6.0
    a. Storm structures should be labeled on the plan. In addition, the size, material, length and slope of storm sewers should be shown.
    b. The grading of the pedestrian accessible route along IL-38 is compliant as shown; however the slopes of the PAR across the driveway entry/exit pavement are very close to 2%; reducing the slope to 1.5% will ease constructability in accordance with PROWAG.
    c. Public Works requests the omission of side curbs from ADA sidewalk ramps.

11. Utility Plan – Sheet C7.0
    a. The basis for the sizing of the overall water service main downstream of the fire hydrant shall be provided. The controlling criteria is undoubtedly fire protection needs.
    b. The proposed Population Equivalent of 39.9 based on a total seating capacity of 133 and a unit generation rate of 30 gallons/table/day appears satisfactory. The required IEPA sewer permit shall be processed through the Public Works Department during the building permit phase of the project and submitted to the IEPA by the applicant.
    c. Details for the proposed grease trap are required.
    d. The observation manhole downstream of the grease trap (Structure S-2) should be configured to easily obtain an unadulterated sample of grease trap effluent. It is recommended the incoming pipe from the grease trap be elevated above the trough/bench and the manhole opening properly oriented to expedite sampling.
    e. The diameter of the water structure W1 is 5' (not 5").
    f. Are the ¾" water supply pipes from the building to the dumpster routed through a 2" PVC sleeve?
    g. It is understood that the final dry utility undergrounding configuration is pending. It is recommended that multiple conduits be provided for communication line(s) to the building to minimize cost if vendors are changed in the future.
    h. In the Utility Crossing table, Crossing X3 does not appear to show the correct elevations.
    i. For the dumpster area drain and Structure S-8, the Neenah R-666B-D4 element could not be found on the nfco.com website. Is this a correct designation?

12. Construction Details – Sheet C8.0
    a. For the Roosevelt Road repair section, the IDOT Route designation should be IL-38.
    b. Use of IDOT Standard 606001-07 is recommended for curb & gutter; especially for depressed curb & gutter at sidewalk ramps.

We look forward to reviewing the building permit stage plans. At that time and in conjunction with the submittal, a comment response letter shall be prepared by the design team responding to the above comments. **A copy of this memorandum will be transmitted to Kimley-Horn.**

Attachments: Concrete Driveway Detail
Cc: Julius Hansen, Public Works Director
Jen Brown, Street and Forestry Superintendent
John Hubsky, Utilities Superintendent
Bill Miller, Utilities Inspector
Ray Ulreich, Stormwater Engineer
Dan Schoenberg, James J. Benes
Jason Cooper, Kimley-Horn

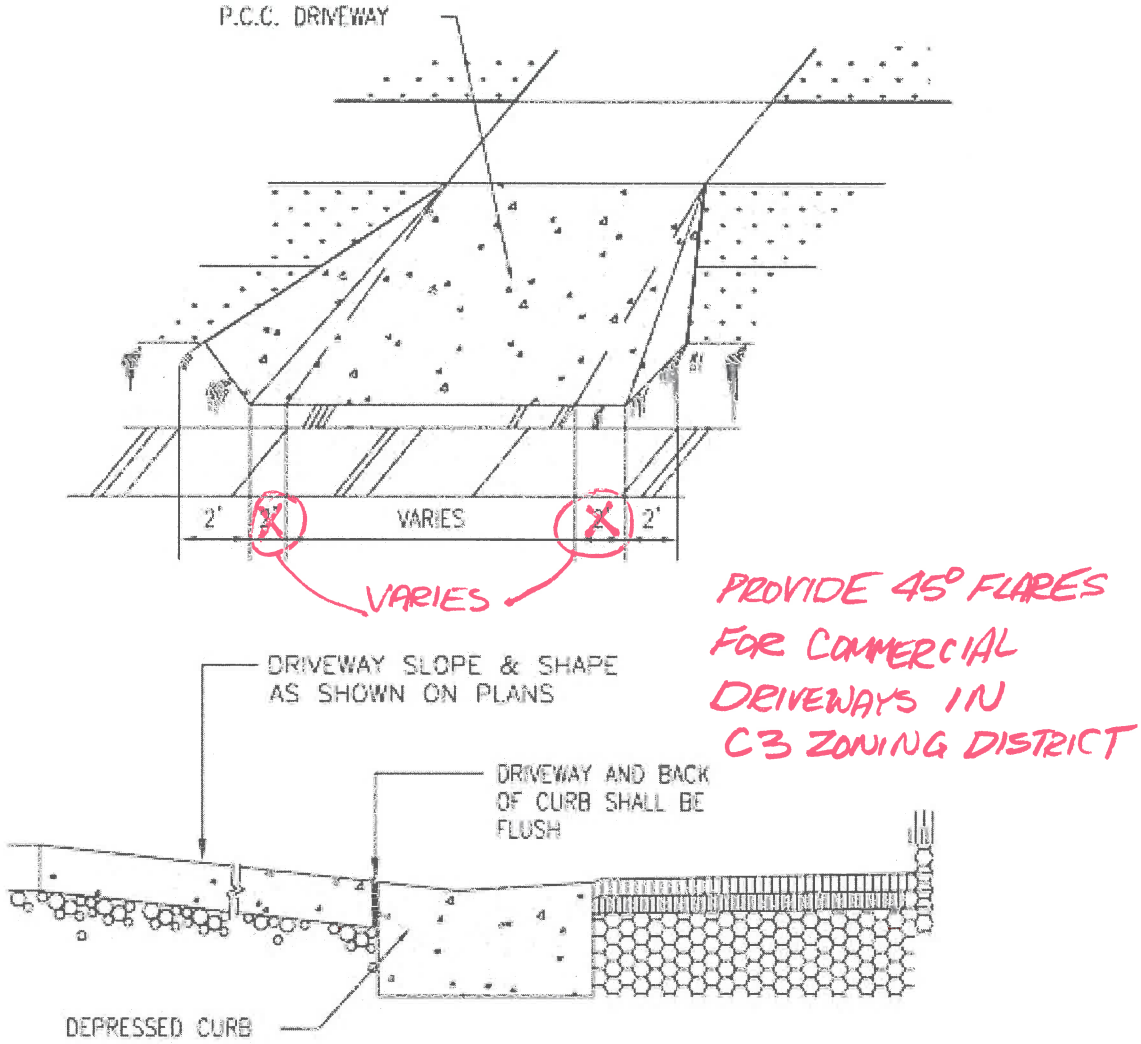

NOTES:

1. THE CONCRETE DRIVEWAY SHALL BE CONSTRUCTED IN ACCORDANCE WITH SECTION 423 OF THE STANDARD SPECIFICATIONS FOR ROAD AND BRIDGE CONSTRUCTION.
2. THE CONCRETE SHALL CONFORM TO SECTION 1020 AND SHALL BE CLASS PV AND SHALL DEVELOP A MINIMUM OF 3,500 PSI COMPRESSIVE STRENGTH AT 14 DAYS.
3. THE DRIVEWAY SHALL BE 6-INCHES THICK FOR RESIDENTIAL DRIVEWAY AND 8" THICK FOR COMMERCIAL DRIVEWAY OVER 4" AGGREGATE BASE AND SHALL BE REINFORCED WITH FIBER MESH ADDITIVE. SEE P.C.C. DRIVEWAY SPECIAL PROVISION FOR SYNTHETIC FIBER SPECIFICATIONS.
4. PREMOLDED FIBER EXPANSION JOINTS SHALL BE INSTALLED BETWEEN DRIVEWAY AND BACK OF CURB.
5. THE DRIVEWAY SHALL HAVE A BROOM FINISH.

CONCRETE DRIVEWAY DETAIL

NOT TO SCALE

CSRS

October 2, 2018

Re: Narrative for
Raising Cane's Chicken Fingers
495-499 Roosevelt Road
Glen Ellyn, IL 60137

Raising Cane's is pleased to propose a new drive-thru restaurant at 495-499 Roosevelt Road located in Glen Ellyn, Illinois.

Site and Building Characteristic

The proposed new Raising Cane's Chicken Fingers development will be replacing a vacant Arby's drive-thru restaurant and vacant Caribou Coffee Shop located at the intersection of Roosevelt Road and Main Street. The 0.99-acre site will contain extensive planting of quality landscaping materials to uphold and enhance the visual appeal of the community.

The design of the 3,707 square foot building uses building plane offsets, variation of parapet elevations, metal awnings, and contrasting masonry materials to define architectural massing and create an interesting visual aesthetic.

The rooftop equipment will be screened from public view using an exterior roof screen that will have a stucco finish. The dumpsters will be screened with an 8-foot-tall masonry enclosure to match the building.

Access and Parking

Primary vehicular access to the site is provided from Roosevelt Road by way of a right-in right-out driveway on the north side of the property. Secondary access points are located on the west side of the site connecting to the adjacent insurance office and on the south side of the site connecting to Taft Ave. Pedestrian access is provided via a walkway from the Roosevelt Rd. public sidewalk to the front entry of the building.

The proposed Raising Cane's Restaurant will provide 33 parking spaces including two accessible parking spaces.
There are 33 parking spaces required based on parking calculations of 1/3 the total interior seat count of 101. Furthermore, a bike rack is provided to accommodate up to 5 bicycles.

Sincerely,
Julie Olson
Architect Intern
CSRS, Inc

October 2, 2018

Re: Operations Information for:
Raising Cane's Chicken Fingers
495-499 Roosevelt Road
Glen Ellyn, IL 60137

Raising Cane's is pleased to propose a new drive-thru restaurant at 495-499 Roosevelt Road located in Glen Ellyn, Illinois.

General Information

Raising Cane's was founded by Todd Graves in 1996 in Baton Rouge, LA. Raising Cane's is a restaurant company that has ONE LOVE – quality chicken finger meals. Cane's is known for its great crew, cool culture and active community involvement.

We provide the community with authentic food that is praised for its freshness. Cane's does not use microwaves or heat lamps to cook or heat its meals. Deliveries are made three times a week to ensure a fresh menu at all times. Cole slaw and lemonade are made fresh daily. Delivery hours are anticipated to be between 4:00am and 9:00am. Hours maybe subject to change, but will not fall within the restaurant business hours. This is the same for trash pickup.

Our restaurant located at 495-499 Roosevelt Road will operate seven days a week. Anticipated business hours are 10:00am to 12:00am Sunday through Thursday, and 10:00am to 2:00am Friday and Saturday. The restaurant can comfortably seat approximately 101 people and will employ approximately 12 employees per shift.

Please contact me directly if there are any questions at 972-769-3364 or lmccormack@raisingcanes.com.

Sincerely,

LuAron McCormack
Raising Cane's
Development Manager

Perspective View

IMAGINE SHAPE DELIVER

#378 Glen Ellyn, IL

Perspective View_*Trash enclosure intentionally not shown*